SCCA
Sports Car Club of America

2011

SCCA
CLUB RACING

General Competition Rules & Specifications

best
hans
PROFESSIONAL
high modulus
hand laid carbon fiber
epoxy resins
best
Sport SERIES
super structural carbon fiber
eco-friendly
best
"The HANS Device is the best safety device since the seatbelt"
Car & Driver Magazine
lower collar
Sport II
COMING JANUARY
hans
25 Years
HANS Performance Products
www.hansdevice.com

What You Need to Compete AND WIN!

Summit Racing Equipment has the performance parts, tools, and safety equipment you need to compete—and win!

- *Millions of parts in stock from 100s of brand names*
- *Fast shipping—in-stock parts shipped the same day when ordered by 9 pm ET*
- *Expert advice from the industry's largest full-time technical department*
- *Unbeatable prices*

Safety

RaceQuip
IMPACT! Racing
SIMPSON
BELL
G-FORCE RACING GEAR
hans

Brakes

HAWK PERFORMANCE
Bendix by Honeywell
wilwood DISC BRAKES
EBC BRAKES
tilton
BAER BRAKE SYSTEMS

Suspension & Tools

QA1 MOTORSPORTS
ALLSTAR PERFORMANCE
AFCO
Eibach SPRINGS
BILSTEIN GAS PRESSURE SHOCK ABSORBER
Longacre RACING PRODUCTS

Performance

Ford RACING PERFORMANCE PARTS
K&N THE WORLD'S BEST AIR FILTER
GM PERFORMANCE PARTS MORE THAN JUST POWER.
Aeroquip PERFORMANCE PRODUCTS
STEEDA AUTOSPORTS
MSD IGNITION

Summit RACING EQUIPMENT

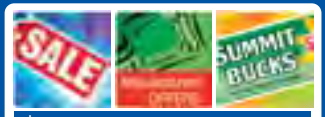

$AVE BIG! Savings Central at SummitRacing.com®

Sales: 1.800.230.3030 • Tech: 1.330.630.0240 • Free Catalog
Same-day shipping on in-stock items • No-hassle special orders • Expert advice

SAFERACER

SCCA NATIONAL RACING SERIES

Official SCCA Safety Supplier

- SA 2010 Helmets
- Suits
- Gloves
- Shoes
- Underwear
- Harnesses
- Towing
- Spec Miata Parts

FREE SHIPPING on all orders over $99

SAFERACER

www.facebook.com/saferacer

VISIT US ONLINE AT SAFERACER.com

OR CALL TOLL FREE 866.781.0997

BELL HARLEY Arai G-FORCE RACING GEAR SCHUBERTH

2011 EDITION

GENERAL COMPETITION RULES

Sports Car Club of America, Inc.
Club Racing Department
6700 SW Topeka Blvd.
Building 300
Topeka, Kansas 66619
(800) 770-2055
www.scca.com

©2011 Revised
SPORTS CAR CLUB OF AMERICA, INC.

All rights reserved. No part of this book may be reproduced or transmitted in any form or by means electronic or mechanical, including photocopying, recording, or by any information storage or retrieval system, without permission in writing from the Sports Car Club of America or as allowed in this book.

The following are registered trademarks of SCCA and are used throughout the General Competition Rules without the circle R.

AMERICAN SEDAN
CANADIAN AMERICAN CHALLENGE CUP
CAN AM
FAST FIVE
FAST FIVE PACESETTER CHALLENGE
FASTRACK
FORMULA CONTINENTAL
FORMULA SUPER VEE
FORMULA VEE
MATTERS OF THE MOMENT
NATIONAL RACING SCHOOL
OLYMPUS RALLY
PACESETTER CHALLENGE
POR
PRESS ON REGARDLESS
PRO RALLY
PRO SOLO
PRO SPORTS 2000
RACETRUCK
RUNOFFS
SCCA
SCCA PRO RACING
SOLO I
SOLO II
SPEC RACER
SPORTSCAR
TRANS AM
WIRE WHEEL
WORLD CHALLENGE

The General Competition Rules of the Sports Car Club of America are intended to assist in the orderly conduct of race events. They are in no way a guarantee against injury or death to participants, spectators, or others. No express or implied warranties of safety or fitness for a particular purpose are intended or shall result from publication of or compliance with these rules.

FOREWORD

Electronic and printed editions of the GCR are available. The electronic edition may be updated during the calendar year and will be available on the SCCA web site. The electronic editions take precedence over the printed edition. Express permission is granted members and others to transmit and use the electronic editions for purposes related to SCCA Club Racing activities.

In all societies where men compete with one another - and in which societies, pray, do they not? - there must be laws to regulate that competition. The extent to which that competition is carried, whether by intensity or sophistication, determines the degree of complexity of the necessary laws; and the extent to which those laws are willingly accepted determines, no less, the degree of civilization of that society.

Translated from Thales of Miletus, c 600 BC.

This book is the property of:

Name: _____

_____

Address: _____

City: _____

State: _____ Zip: _____

Region: _____

CONTENTS

1. CONTROLLING COMPETITION 12
1.1. SCCA (Sports Car Club of America, Inc.) 12
1.2. SCCA GENERAL COMPETITION RULES 12
1.2.1. Replacing the GCR 12
1.2.2. Revising the GCR 12
1.2.3. Interpreting and Applying the GCR 13
1.2.4. Assumption of Risk 13
1.2.5. Release and Waiver of Liability, Assumption of Risk and Indemnity Agreement 14

2. PARTICIPANT CONDUCT 16
2.1. BREACH OF THE RULES 16
2.2. ADDITIONAL PARTICIPANT RESPONSIBILITIES 16
2.2.1. Authorized Events 16
2.2.2. Driver and Entrant Responsible for Crew 16
2.2.3. Waiver Signer Responsible for Minor 16
2.2.4. Official's Conflicts of Interest 16
2.2.5. Pets at the Track 17
2.3. IMPAIRMENT 17
2.3.1. Alcoholic Beverages, Narcotics, and Dangerous Drugs 17
2.3.2. Medical Fitness 17
2.4. EXECUTIVE STEWARD'S DRIVER OR OFFICIAL REVIEW 18
2.5. CRB'S Official Review 18
2.6. OFFICIAL'S DOWNGRADE OR LOSS OF LICENSE 19

3. EVENTS 20
3.1. TYPES OF SCCA RACE EVENTS 20
3.1.1. National Races 20
3.1.2. Double National Races 20
3.1.3. Dual National Races 20
3.1.4. Restricted National Races 21
3.1.5. Regional Races 21
3.1.6. Restricted Regionals 22
3.1.7 Concurrent National and Regional Races 22
3.1.*8* Drivers' Schools 22
3.1.*9* Vintage/Historic Races 22
3.1.10. Practice Days 23
3.2. SCHEDULING RACE EVENTS 24
3.2.1. Postponing or Canceling Events 24
3.3. SANCTIONING RACE EVENTS 24
3.3.1. Submitting to the GCR 24
3.3.2. Applying for an SCCA Sanction 25
3.3.3. Sanction Requirements 25
3.4. COURSES 25
3.4.1. Types of SCCA Course Approval 25
3.4.2. Application For An Event On An Unapproved Course 25
3.5. SUPPLEMENTAL REGULATIONS AND ENTRY FORMS 25
3.5.1. Required Contents of Supplemental Regulations 25
3.5.2. Combining Classes into Race Groups 26
3.5.3. Additional Classes 26
3.5.4. Multiple Types of Events on a Single Weekend 26
3.5.5. Changing Supplemental Regulations 26
3.5.6. Required Contents of Entry Forms 27
3.6. INSURANCE 27
3.6.1. Insurance Requirements 27
3.6.2. Insurance Availability 27
3.6.3. Waivers 27

3.6.4. Scaffolding At SCCA Events 27
3.7. ORGANIZER'S ADDITIONAL RESPONSIBILITIES 27
3.7.1. Entry List 27
3.7.2. Results 27
3.7.3. Post-Event Reporting 28
3.7.4. Event Program 28
3.7.5. Private Event 28
3.8. AWARDS 29
3.8.1. Distributing Awards 29
3.8.2. Trophies 29
3.8.3. Points For Co-Driver 29
3.8.4. Expense, Starting, or Appearance Money 29
3.8.5. Prize Money 29
3.8.6. Refuse Awards 29
3.9. CHAMPIONSHIPS 29
3.9.1. Division Championships 29
3.9.2. SCCA Runoffs 31
3.9.3 National Point Standings 32

4. PARTICIPANT LICENSING, EVENT CREDENTIALS, & ENTRIES 34
4.1. SCCA RESERVATION OF RIGHTS 34
4.2. SUBMITTING TO THE GCR 34
4.3. PARTICIPANT LICENSES 34
4.3.1. SCCA Licenses 34
4.3.2. SCCA Membership 34
4.3.3. Expiring License and Membership 34
4.3.4. Possessing a Membership and License 34
4.3.5. Presenting a License 34
4.3.6. Required Membership and License 34
4.4. RACE EVENT ENTRIES 34
4.4.1. Entering an Event 35
4.4.2. Entering Multiple Classes 35
4.4.3. Withdrawing an Entry 35
4.4.4. Falsifying an Entry 35
4.4.5. Racing Under an Assumed Name 35
4.4.6. Refusing an Entry 35
4.5. EVENT CREDENTIALS 35
4.5.1. Waivers 35
4.5.2. Photo ID 35
4.5.3. Hazardous Area Credentials 36
4.5.4. Non-hazardous Area Credentials 36

5. OFFICIALS, THEIR DUTIES, OPERATING PROCEDURES, AND ..... EQUIPMENT 38
5.1. PRINCIPAL OFFICIALS 38
5.1.1. Required Stewards 38
5.1.2. Appointment 38
5.1.3. Minimum Grades of Licenses 38
5.1.4. Right to Oversight 39
5.1.5. Plurality of Duties 39
5.1.6. Separation of Duties 39
5.2. RACE CHAIRMAN 39
5.2.1. Race Chairman Responsibilities 39
5.3. COURSE MARSHAL 39
5.4. EMERGENCY SERVICES – MEDICAL and FIRE SAFETY 40
5.4.1. Purpose 40
5.4.2. Personnel 40
5.4.3. Required Equipment 40
5.5. FLAGGING AND COMMUNICATIONS 42
5.5.1. Chief of Flagging and Communications 42

5.5.2. General Organization 42
5.5.3. Corner Stations 42
5.6. REGISTRATION 43
5.7. SOUND CONTROL 43
5.7.1. Sound Control Chief 43
5.7.2. General Procedures and Requirements 43
5.7.3. Standards 44
5.8. START 44
5.8.1. Chief Starter 44
5.8.2. Responsibility 44
5.8.3. Function 44
5.8.4. Location 44
5.8.5. Equipment 44
5.9. TECHNICAL AND SAFETY INSPECTION 44
5.9.1. Chief Technical Inspector 44
5.9.2. Inspecting Automobiles 45
5.9.3. Impound 46
5.9.4. Official Scales 46
5.10. TIMING AND SCORING 47
5.10.1. Chief of Timing and Scoring 47
5.10.2. Approved Systems 47
5.10.3. Timing and Scoring Systems 47
5.10.4. Results 48
5.10.5. Media 49
5.11. ADDITIONAL OFFICIALS..... 49
5.11.1. Driver Observer 49
5.11.2. Press Officer 49
5.11.3. Judges 49
5.12. STEWARDS 49
5.12.1. Stewards of the Meeting (SOM) 49
5.12.2. Chief Steward 51
5.12.3. Assistant Chief Steward – Safety 52
5.12.4. Compliance Checking Crew 53

6. RACING RULES AND PROCEDURES 54
6.1. FLAGS 54
6.1.1. Meaning of Each Flag 54
6.1.2. Lights Instead of Flags 55
6.2. RULES OF THE PADDOCK 55
6.2.1. Paddock Area Defined 55
6.2.2. Retiring to the Paddock 55
6.3. RULES OF THE PITS..... 55
6.3.1. Pit Area Defined 55
6.3.2. Required Equipment 55
6.3.3. Fueling 56
6.3.4. Authorized Personnel in the Pits 56
6.3.5. Number of Crew Members in the Hot Pit Lane 56
6.3.6. Control 56
6.3.7. Pit Barrier 56
6.3.8. Overshooting the Pit 56
6.3.9. Air Bottles/Gas Cylinders 56
6.4. THE GRID 56
6.4.1 General 56
6.4.2 Establishing the Race Grid 56
6.4.3. Qualifying for Oversubscribed Classes 57
6.4.4. Starting the Engine on the Grid 57
6.4.5. Push Starts on the Grid 57
6.4.6. Fueling 57
6.4.7. Air Bottles/Gas Cylinders 57
6.5. RACES STARTS 57

6.5.1. SCCA Standard Rolling Start 57
6.5.2 Split Starts 59
6.5.3. Late Starters 60
6.6. PACE AND SAFETY CAR 60
6.6.1. Operation and Control 60
6.6.2. Safety Car Procedures 60
6.7. STOPPING A SESSION 60
6.7.1. Methods 60
6.7.2. Assistance During Race Session Stoppage 61
6.8. RESTARTING A RACE 61
6.9. RAIN RACING 61
6.10. TIMING LINE; STARTERS, FINISHERS, AND WINNERS 61
6.10.1. Starting Line for Timing and Scoring 61
6.10.2. Race Starter 61
6.10.3. Race Finisher 61
6.10.4. Race Winner 61
6.10.5 Shortened Races 62
6.10.6. Lap Record 62
6.11. RULES OF THE ROAD 62
6.11.1 On Course Driver Conduct 62
6.11.2. Hand Signals 63
6.11.3. Off-Course Excursions 63
6.11.4. Counter-Race Direction Driving 63
6.11.5. Stopping on a Course; Accepting Assistance 63
6.11.6. Using the Engine Self-Starter on Course 63
6.11.7. Passengers 63

7. PENALTIES 64
7.1. WHO MAY BE PENALIZED 64
7.2. RANGE OF PENALTIES 64
7.3. MULTIPLE PENALTIES 65
7.4. AUTOMATIC PENALTIES 65
7.5. AMENDMENT OF RESULTS 66
7.6. PUBLICATION 66

8. STEWARDS' ACTIONS, PROTESTS, AND APPEALS 68
8.1. TYPES OF JUDICIAL ACTIONS 68
8.1.1. Chief Steward's Action 68
8.1.2. Request for Action 68
8.1.3. Chief Steward's Action Against a Car 68
8.1.4. Compliance Review 68
8.1.5. Protests 69
8.2. HEARINGS AND JUDGEMENTS 69
8.3. PROTEST PROCEDURES 69
8.3.1. How to Protest 69
8.3.2. Reasonable Protests 70
8.3.3. Actions Against Cars 70
8.4. APPEALS 72
8.4.1. Right to Appeal 72
8.4.2. Appointment and Jurisdiction 72
8.4.3. Appeal Procedures 72
8.4.4. Hearing Appeals 73
8.4.5. Judgment of the Court of Appeals 74
8.4.6. Publication and Effect of Decision 74
8.4.7. Bad Faith Appeals 74
8.4.8. Appeals Affecting Final Points Standings 74

9. CARS AND EQUIPMENT 76
9.1. CATEGORIES AND CLASSES 76
9.1.1. FORMULA CATEGORY CLASSES 76

9.1.2. GRAND TOURING CATEGORY CLASSES 77
9.1.3. IMPROVED TOURING CATEGORY CLASSES (Regional ..... Classes) 77
9.1.4. SUPER TOURING CATEGORY CLASSES 77
9.1.5. PRODUCTION CATEGORY CLASSES..... 77
9.1.6. SEDAN CATEGORY 77
9.1.7. SHOWROOM STOCK CATEGORY CLASSES 77
9.1.8. SPEC MIATA CLASS..... 78
9.1.9. SPORTS RACING CATEGORY CLASSES..... 78
9.1.10. TOURING CATEGORY CLASSES: 78
9.1.11. SPEC MX-5 CLASS 78
9.1.12. CARS RUN IN THE PROPER CLASS 78
9.1.13. NATIONAL CLASS PARTICIPATION REQUIREMENTS 78
9.2. VEHICLE DOCUMENTATION 79
9.2.1 VEHICLE LOGBOOKS 79
9.2.2. HOMOLOGATION REQUIREMENTS 80
9.3. GENERAL TECHNICAL AND SAFETY Specifications 80
9.3.1. ACCUMULATORS (e.g., Accusumps) 81
9.3.2. ACTIVE SUSPENSIONS AND TRACTION CONTROL SYSTEMS 81
9.3.3. ADVERTISEMENTS AND GRAPHICS 81
9.3.4. AERODYNAMIC SKIRTS 81
9.3.5. ALL-WHEEL DRIVE 81
9.3.6. APPEARANCE NEAT AND CLEAN, AND SUITABLE FOR COMPETITION 81
9.3.7. AUTOMATIC TRANSMISSIONS AND HAND CONTROLS 81
9.3.8. BALLAST 81
9.3.9. BATTERIES 81
9.3.10. BODY PANELS 81
9.3.11. BRAKES 81
9.3.12. CAMERA MOUNTS 82
9.3.13. CARBURETOR FUEL INLET FITTING 82
9.3.14. COOL SUITS 82
9.3.15. COOLANT CATCH TANKS 82
9.3.16. CRYOGENIC TREATMENT 82
9.3.17. DATA COLLECTION DEVICES 82
9.3.18. DETACHABLE PANELS/SUNROOFS 82
9.3.19. DRIVER'S RESTRAINT SYSTEM 82
9.3.20. DRIVER'S SAFETY EQUIPMENT 86
9.3.21. ELIGIBILITY 88
9.3.22. EXHAUST SYSTEM 88
9.3.23. FIRE SYSTEM 88
9.3.24. FIREWALL AND FLOOR 89
9.3.25. FORMULA CAR VISIBILITY 89
9.3.26. FUEL 89
9.3.27. FUEL CELL SPECIFICATIONS 92
9.3.28. FUEL, OIL, AND WATER LINES 93
9.3.29. IDENTIFICATION MARKINGS 93
9.3.30. INSIDE NET 96
9.3.31. LEAKAGE AND CAPS 96
9.3.32. LIGHTS 96
9.3.33. LOSS OF BODYWORK 97
9.3.34. MASTER SWITCH 97
9.3.35. MIRRORS 98
9.3.36. NON-METALLIC WHEEL/CHASSIS CONSTRUCTION 98
9.3.37. OIL AND OIL ADDITIVES 98
9.3.38. OIL CATCH TANKS, FILTERS, AND BREATHERS 98
9.3.39. ROLL CAGE/ROLL BAR 98
9.3.40. SCATTERSHIELDS/CHAIN GUARDS 98

9.3.41. SEATS 99
9.3.42. STEERING WHEEL LOCKS 99
9.3.43. STEERING WHEELS 99
9.3.44. SUSPENSION AND STEERING 99
9.3.45. TIRES 99
9.3.46. TIRE WARMERS 100
9.3.47. TONNEAU AND BOOT COVERS 100
9.3.48. TOWING EYES 100
9.3.49. VENTILATION 100
9.3.50. WEIGHT 100
9.3.51. WHEEL FANS 100
9.3.52. WHEEL RIM WIDTH 100
9.3.53. WINDOWS 100
9.3.54. WINDOW SAFETY NETS 100
9.3.55. WINDSHIELD CLIPS/REAR WINDOW STRAPS 101
9.4. ROLL CAGES FOR GT AND PRODUCTION BASED CARS 102
9.4.5. ROLL CAGES FOR FORMULA CARS AND SPORTS RACING ..... CARS 110

APPENDIX A. Administrative Glossary 116

APPENDIX B. Organizational and Administrative Procedures ..... for Events 118
1. RACE EVENT SCHEDULING 118
1.1. Divisional Scheduling Representative 118
1.2. Scheduling Policies and Procedures 118
1.3. Exceptions to Scheduling Policies 119
1.4. Final Schedule 119
1.5. Calendar Listing Fees 119
1.6. Schedule Changes 119
2. RACE EVENT FEES 119
2.1. Event Related Fees 119
3. INSURANCE COVERAGES AND *LIMITS..... 120*
3.1. Coverage And Limits 120
3.2. Increased Limits For Licensed SCCA Members 121
3.3. Alternative Liability Insurance Procedures For Events 121

APPENDIX C. Licensing and Types 122
1. OFFICIAL'S LICENSING AND TYPES 122
1.1. Official 122
1.2. Steward 122
1.3. Licensing Requirements 122
1.4. Licensing Minors 122
2. COMPETITION LICENSES 123
2.1. Medical Requirements 123
2.2. Credit Toward License 123
2.3. Competition Licensing Requirements 123
2.4. Additional Licensing Information 124
2.5. Licensing Minors 124
2.6. 15 Year-Old Novice Permits 124
2.7. Novice Permit 125
2.8. Regional License 127
2.9. National License 127
3. CREW LICENSES 127
3.1. Licensing Requirements 127
3.2. Licensing Minors as Crew 127
4. NON-STANDARD LICENSE SITUATIONS 127

APPENDIX D. Duties, Authorities, and Responsibilities of the Chief ..... Steward 132

APPENDIX E. Oval Track Racing 138

APPENDIX F. Technical Glossary 142

APPENDIX G. Facts, Formulas, and Measurement Standards 168
1. FACTS AND FORMULAS TO BE USED AT ALL SCCA EVENTS 168
2. MEASUREMENT STANDARDS 169
3. MEASURING COURSES 169
4. MEASURING TRACK 169

APPENDIX H. Index 170

APPENDIX I. 2007 Roll Cage Rules 178

APPENDIX J. 2004 Production Category Roll Cage Rules..... 192

9.1.1. FORMULA CATEGORY 197
A. FORMULA ATLANTIC PREPARATION RULES 197
B. FORMULA CONTINENTAL PREPARATION RULES 206
C. FORMULA VEE PREPARATION RULES 216
D. FORMULA F PREPARATION RULES 230
E. FORMULA 500 PREPARATION RULES 251
F. FORMULA MAZDA 255
G. FORMULA S PREPARATION RULES 261
H. FORMULA 1000 PREPARATION RULES 264
I. FORMULA FIRST 268
J. FORMULA ENTERPRISES PREPARATION RULES 281

9.1.2. GT CATEGORY SPECIFICATIONS 293
F. GT-2, 3, LITE PREPARATION RULES 312

9.1.3. IMPROVED TOURING CATEGORY 383
ITR 396
ITS 402
ITA 410
ITB 420
ITC 432

9.1.4. SUPER TOURING CATEGORY 441
9.1.4. STO Specific Technical Regulations 456
9.1.4.2 STU Specific Technical Regulations 466
9.1.4.3 STL Specific Technical Regulations (Regional Only) 470

9.1.5. PRODUCTION CATEGORY 475
EP 498
FP 516
HP 534

9.1.6. AMERICAN SEDAN CATEGORY 547
AS 562

9.1.7. SHOWROOM STOCK CATEGORY..... 569
SSB 574
SSC 580

9.1.8. SPEC MIATA CLASS..... 589
SM 604

9.1.9. SPORTS RACING CATEGORY 606

A.1. ASR CLASSIFICATION - (REGIONAL ONLY CLASS) 606
A.2. CSR AND DSR CLASSIFICATION 611
B. SPORTS 2000 PREPARATION RULES 619
C. SPEC RACER FORD 626
D. SHELBY CAN-AM RACER CLASSED IN CSR 637
E. OLDSMOBILE QUAD 4 CLASSED IN CSR 641
F. ENTERPRISES SPORTS RACER PREPARATION RULES 643
G. ELAN VAN DIEMEN DP02 SPORTS RACER CLASSED IN CSR 651

9.1.10. TOURING CATEGORY 653
T1 664
T2 670
T3 680

9.1.11. SPEC MX-5 CLASS (Regional Only)..... 689

1. CONTROLLING COMPETITION

1.1. SCCA (SPORTS CAR CLUB OF AMERICA, INC.)

The SCCA is a non-profit organization, incorporated in the state of Connecticut, dedicated to owning, operating, and preserving sports cars; arranging and regulating sports car events and exhibitions; encouraging safe and sportsmanlike conduct on public highways; and developing technical information relevant to these purposes. ACCUS FIA has delegated the authority to sanction FIA listed events to the SCCA.
The addresses of SCCA are as follows:

US Mail

SCCA, Inc.
Club Racing
PO Box 19400
Topeka KS 66619

FedEx and UPS

SCCA, Inc.
Club Racing
6700 SW Topeka Blvd. Building 300
Topeka, Kansas 66619

Email

clubracing@scca.com

In these General Competition Rules, SCCA is sometimes referred to as "the National Office".

1.2. SCCA GENERAL COMPETITION RULES

SCCA has established these General Competition Rules (GCR) to govern all Club Racing events sanctioned by the SCCA. The GCR also includes the General Technical and Safety Specifications, and the Category Rules.

1.2.1. Replacing the GCR

Beginning January 1st each calendar year, the newest edition of the GCR takes effect and supersedes all prior editions. Rule revisions published in prior calendar year(s) must be included in the new edition of the GCR to remain effective. Court of Appeals decisions on technical specifications are effective for the calendar year during which they are rendered, and are superseded by the following year's edition of the GCR.

1.2.2. Revising the GCR

A. *The latest published electronic GCR version on the official SCCA web site supersedes all prior GCR versions, FasTrack, Racing Memos, Member Advisories, or Tech Bulletins published in writing or on the official SCCA web site as of the first day of the month of publication.*

B. When a rule clarification or change must be implemented immediately, the Board of Directors will issue a memorandum stating the change and its effective date. These memoranda will be posted on the SCCA web site and sent to all Executive Stewards and Divisional Administrators of Tech.

C. If preliminary performance estimates for a car initially classified or reclassified prove grossly inaccurate during its first year of classified or reclassified eligibility, the technical specifications may be changed on thirty days' notice.

1.2.3. Interpreting and Applying the GCR

A. Interpreting the GCR shall not be strained or tortured and applying the GCR shall be logical, remembering that the GCR cannot specifically cover all possible situations. Words such as "shall" or "shall not", "will" or "will not", "can not", "may not", "are" or "must" are mandatory; and words such as "may" and "should" are permissive.

B. References in the GCR to the SCCA Operations Manual and the SCCA Insurance Manual are for informational purposes; these SCCA documents may not be protested or appealed.

C. Conflicts among or between portions of the GCR are handled as follows:

1. The Category Rules take precedence over the General Technical Specifications.

2. The specification line for a particular car takes precedence over the Category Rules and the General Technical Specifications.

3. Any item not addressed in the Category Rules is controlled by the General Technical Specifications.

D. The interpretation and application of the GCR by SCCA officials is final and binding. To promote the sport of automobile competition; to achieve prompt finality in competition results; and to recognize the numerous benefits to them, all members expressly agree that:

1. SCCA officials' determinations are non-litigable;

2. They will not initiate or maintain litigation of any kind against SCCA or anyone acting on behalf of SCCA to reverse or modify such determinations, or seek to recover damages or other relief allegedly incurred or required as a result of such determination; and

3. Any member who initiates or maintains litigation violating this provision agrees to reimburse SCCA for all costs of litigation, including travel expenses and attorneys' fees.

E. All money amounts specified in the GCR are in US Dollars.

F. The pronouns "he", "his", and "him" are generic and are not intended to indicate gender.

G. All dimensions are in inches unless otherwise noted.

1.2.4. Assumption of Risk

Road racing is a dangerous sport that can result in serious injury or death. Participation in all aspects of the sport is voluntary. The ultimate responsibility for participant and vehicle safety lies with the participant, vehicle owner, driver and crew members.

The participant also acknowledges that by participating in the event, the participant may suffer bodily injury or death, or loss or damage to property. The participant further acknowledges that the participant has voluntarily, assumed the risk of bodily injury or death or loss or damage to, property and waives any claims for bodily injury or death, or loss or damage to property against SCCA, its directors, officers, employees and

agents, event officials, event sponsors, racetrack operators and other participants; discharges such persons and entities from responsibility for such losses; and covenants not to sue such persons and entities for bodily injury or death or loss or damage to property.

1.2.5. Release and Waiver of Liability, Assumption of Risk and Indemnity Agreement

All participants shall be required as a condition of participation to sign all required entry forms including but not limited to such releases as shall be required by SCCA and/or its insurers consisting of the following or similar wording. Whether or not the participant signs such releases, the participant agrees to the terms set forth below and participant is hereby put on notice of such terms and makes such agreement either by receiving this Rulebook or by participating in the sport, or both.

IN CONSIDERATION of being permitted to compete, officiate, observe, work for, or participate in any way in any Sports Car Club of America or SCCA Pro Racing ("SCCA") events or activities (EVENTS), or being permitted to enter for any purpose any RESTRICTED AREA thereof (defined as any area requiring special authorization, credentials, or permission to enter or any area to which admission by the general public is restricted or prohibited), I, for myself, my personal representatives, heirs and next of kin:

1. Hereby acknowledge, agree, and represent that I will immediately upon entering any of such RESTRICTED AREAS, and will continuously thereafter, inspect the RESTRICTED AREAS which I enter and I further agree and warrant that, if at any time, I am in or about the RESTRICTED AREAS and I feel anything to be unsafe, I will immediately advise the officials of such and will leave the RESTRICTED AREAS and will refuse to participate further. I understand that the nature of the EVENT may not permit me to inspect the RESTRICTED AREAS and/or EVENT course and facilities (including adjacent areas thereof) with which I may contact during the EVENT prior to my participation and that there may be risks not known to me or that are not foreseeable at this time. I agree that, if at any time, I feel anything to be UNSAFE, I will immediately take all necessary precautions to avoid the unsafe area and REFUSE TO PARTICIPATE further in the EVENT.

2. Hereby RELEASE, WAIVE, and DISCHARGE SCCA,the promoters, participants, racing associations, sanctioning organizations or any affiliate, subsidiary or subdivision thereof, track operators, track owners, officials, car owners, drivers, pit crews, rescue personnel, any person in any RESTRICTED AREA, sponsors, advertisers, owners and lessees of premises used to conduct the EVENTS, premises and event inspectors, surveyors, underwriters, consultants and others who give recommendations, directions, or instructions or engage in risk evaluation

or loss control activities regarding the premises or EVENTS and for each of them, their directors, officers, agents, and employees, all for the purposes herein referred to as "RELEASEES," FROM ALL LIABILITY TO ME, my personal representatives, assigns, heirs, and next of kin FOR ANY AND ALL LOSS OR DAMAGE, AND ANY CLAIM OR DEMANDS THEREFOR ON ACCOUNT OF INJURY TO THE PERSON OR PROPERTY OR RESULTING IN THE DEATH OF THE UNDERSIGNED ARISING OUT OF OR

RELATED TO THE EVENTS, WHETHER CAUSED BY THE NEGLIGENCE OF THE RELEASEES OR OTHERWISE. In addition, I COVENANT NOT TO SUE any of the RELEASEES based upon any claim arising out of any of the EVENTS.

3. Hereby ASSUME FULL RESPONSIBILITY FOR ANY RISK OF BODILY INJURY, DEATH OR PROPERTY DAMAGE arising out of or related to the EVENTS whether caused by the NEGLIGENCE OF RELEASEES or otherwise.

4. Hereby AGREE TO INDEMNIFY AND SAVE AND HOLD HARMLESS the RELEASEES and each of them from any loss, liability, damage, or cost they may incur due to claims brought against the RELEASEES arising out of my injury, or death, or damage to my property while I am in the RESTRICTED AREAS and/or while competing, practicing, officiating, observing or working for or for any purpose participating in the EVENTS and whether caused by the negligence of the RELEASEES or otherwise.

5. Hereby acknowledge that THE EVENTS ARE POTENTIALLY VERY DANGEROUS and involve the risk of serious injury and/or death and/or property damage. I also expressly acknowledge that INJURIES MAY BE COMPOUNDED OR INCREASED BY NEGLIGENT RESCUE OPERATIONS OR PROCEDURES OF THE RELEASEES.

6. Hereby agree that this Release and Waiver of Liability, Assumption of Risk and Indemnity Agreement extends to all acts of negligence by the RELEASEES, INCLUDING NEGLIGENT RESCUE OPERATIONS and is intended to be as broad and inclusive as is permitted by the laws of the Province or State in which the EVENTS are conducted and that if any portion thereof is held invalid, it is agreed that the balance shall, not withstanding, continue in full legal force and effect.

I HAVE READ THIS RELEASE AND WAIVER OF LIABILITY, ASSUMPTION OF RISK AND INDEMNITY AGREEMENT, FULLY UNDERSTAND ITS TERMS, UNDERSTAND THAT I HAVE GIVEN UP SUBSTANTIAL RIGHTS BY SIGNING IT, AND HAVE SIGNED IT FREELY AND VOLUNTARILY WITHOUT ANY INDUCEMENT, ASSURANCE, OR GUARANTEE BEING MADE TO ME AND INTEND MY SIGNATURE TO BE A COMPLETE AND UNCONDITIONAL RELEASE OF ALL LIABILITY TO THE GREATEST EXTENT ALLOWED BY LAW.

2. PARTICIPANT CONDUCT

Each participant shall conduct himself to the highest standards of behavior and sportsmanship. His actions shall not prejudice the reputation of the SCCA or the sport of automobile racing. Failure to comply may result in penalties as specified in Section 7; an official may, in addition, lose his assignment for that event.

2.1. BREACH OF THE RULES

Beyond any other offenses or violations of specific rules, each of the following is a breach of the GCR.

2.1.1. Bribing, or attempting to bribe, anyone connected with an event; soliciting, accepting, or offering to accept a bribe.

2.1.2. Acting to enable a person or car known to be ineligible, not properly entered, or credentialed to participate in an event.

2.1.3. Acting fraudulently or prejudicially to the interests of the SCCA or of the sport of automobile racing.

2.1.4. Driving recklessly or dangerously, anywhere on the track property.

2.1.5. Failing to obey a direction from an official.

2.1.6. Refusing to cooperate with, interfering with, or obstructing the actions of the Chief Steward, the Stewards of the Meeting (SOM), the Court of Appeals, or other review committees in the performance of their duties.

2.1.7. Acting in an unsportsmanlike manner.

2.1.8. Committing physical violence upon any other participant or spectator.

2.2. ADDITIONAL PARTICIPANT RESPONSIBILITIES

2.2.1. Authorized Events

SCCA licensed drivers and officials may participate in any events except those specifically disapproved by the Club Racing Board (CRB) or the Executive Steward of the Division concerned.

2.2.2. Driver and Entrant Responsible for Crew

The driver and entrant are responsible for the conduct of their crew at all times during an event, including a crew member's violation of the GCR or the Supplemental Regulations. For the purpose of this section, an event begins when registration opens and ends when the driver, entrant, and all crew members from that team have left the track property at the conclusion of the event.

2.2.3. Waiver Signer Responsible for Minor

Anyone signing an event waiver for a minor is fully responsible for that minor.

2.2.4. Official's Conflicts of Interest

A. The Chief Steward, Assistant Chief Stewards, and the SOM shall have no financial, employment or business interest; or significant personal relationship with the organizer or sponsor of an event. Being a member or holding an office in an SCCA Region is not considered a conflict of interest in the absence of any other evidence.

B. A steward should not operate a session where a family member, co-worker, or a person with whom he has a significant business,

financial, or personal relationship is an entrant or driver.

C. An SOM shall not be involved in a hearing involving a family member, co-worker, or any person with whom he has a significant business, financial, or personal relationship.

2.2.5. Pets at the Track

The owner is fully responsible for actions of his pet(s), and for any liability arising from those actions. Unless a particular track has a stated policy to the contrary, a pet may be in the paddock, provided it is appropriately confined or on a leash. A pet on a leash must be controlled by an adult, and the leash may not exceed 10 feet in length. Pets are prohibited in the pits.

2.3. IMPAIRMENT

2.3.1. Alcoholic Beverages, Narcotics, and Dangerous Drugs

A. No driver, entrant, or crew may consume alcohol until all practice, qualifying, or racing for his class is finished for the day. No official may consume alcohol until his duties have been completed for the day. Anyone who has consumed any alcohol on the day of an event, other than following the conclusion of his activities, shall not participate on that day, may be excluded from the balance of the event, and may be penalized as specified in Section 7. Alcohol may not be consumed in the pits until after all the day's on track activities are concluded.

B. No participant may use any narcotic or dangerous drug. A participant who uses a narcotic or dangerous drug during an event or on the grounds where an event is being held shall not participate; may be excluded from the event by the Chief Steward or his Chief of Specialty; may be removed from the grounds at the order of the Chief Steward; and may be penalized as specified in Section 7. For the purpose of this section, a narcotic or dangerous drug is defined by Federal law or by the law of the state where the event is being held.

2.3.2. Medical Fitness

Each participant is encouraged to have someone at the track maintain his medical information in case it may be needed by a medical treatment team.

A. Medical Fitness of a Driver

1. Reporting Responsibility of Driver

   The primary responsibility for reporting any circumstance, including medical conditions, that could affect fitness to compete lies with the driver.

2. Medical Responsibility of Driver

   No driver shall compete in any event unless he has been examined by a physician within the period specified in AppC.2.1.A., and has been recommended by that physician to be approved for a competition license. The SCCA Licensing Department approves competition licenses with the assistance of the Club Racing Medical Director and the Medical Review Board.

3. Medical Condition Affecting Fitness of Driver

   Any known medical condition that could affect medical fitness to compete must be reported immediately to the SCCA Licensing Department for review by the Medical Review Board. Conditions which must be reported include any signif-

icant change in medical status involving pregnancy; cardiac or neurological problems, such as heart attack, heart surgery, strokes, or seizures; any major surgery; or diagnosis of cancer. Medical Review Board approval is required before an individual with a known medical condition may compete.

4. Involvement in Accident at an Event

A driver must report to the event Medical Service as soon as possible whenever any of the following conditions is met:

1. He is involved in an incident where his car rolls over;
2. His car collides with a stationary object hard enough to cause structural damage to the car;
3. He is aware that he may have been injured in an incident;
4. He has been directed by an official to do so.

A driver transported to an off-site medical facility cannot continue to compete in that event without a medical release signed by the attending physician at the treating facility or the event Chief Medical Official.

B. Medical Fitness of Crew

Any known medical condition (including pregnancy) which could affect medical fitness to perform the duties of a crew member may prevent admission to the pits or any other hazardous area.

C. Medical Fitness of an Official

Any known medical condition (including pregnancy) which could affect the ability to perform some or all of the assigned specialty duties requires reassignment based on the recommendations of the person's physician. Some medical conditions (including pregnancy) may require reassignment to non-hazardous areas only.

D. Loss of Consciousness

A participant who suffers loss of consciousness, defined as lack of response to others or amnesia for the incident, shall be medically evaluated before participating further in the current event or in future events, and must be cleared either by the attending physician at the treating facility and the event Chief Medical Official, if there is one, or the Division Medical Advisor, or the Medical Advisory Board, depending on the outcome of the evaluation. The protocol for evaluation is available from the event Safety Steward and the National Office.

2.4. EXECUTIVE STEWARD'S DRIVER OR OFFICIAL REVIEW

A driver's or official's Divisional Executive Steward may name and convene a committee to review the individual's conduct, car legality, competition record, and/or other matters. The committee has the authority to invoke penalties as specified in Section 7, and may also suspend any license, or may return a driver to an SCCA Drivers' School. The driver or official has the right to appeal the decision as specified in 8.4.

2.5. CRB'S OFFICIAL REVIEW

The license of any official may be suspended by the CRB, if in their view his actions are contrary to the best interest of the SCCA. A license may be suspended for a period of time specified by the CRB, or it may be revoked permanently. License revocation by the CRB may be appealed to the SCCA Board of Directors.

2.6. OFFICIAL'S DOWNGRADE OR LOSS OF LICENSE

2.6.1. The license of any official may be downgraded at any time for non- or under-participation, conduct violating the GCR, actions contrary to the best interest of the SCCA, or inability to perform satisfactorily at the current license grade.

2.6.2. The license of any official may not be renewed for non- or under-participation, conduct violating the GCR, or actions contrary to the best interest of the SCCA.

3. EVENTS

3.1. TYPES OF SCCA RACE EVENTS

The SCCA sanctions various types of race events conducted in compliance with the GCR. SCCA race events are classified by the persons eligible to participate, the categories of cars eligible to compete, defined organizational requirements, and the awards offered.

3.1.1. National Races

SCCA identifies National races in each division for which only drivers holding SCCA National Competition Licenses are eligible. Each National race will include all National classes identified in Section 9.

A. There shall be at least 5 race groups.

B. Practice/Qualifying

1. All practice and qualifying shall be by race group.
2. Practice and/or qualifying sessions for each race group must total a minimum of 45 minutes.
3. Each race group shall have at least 2 sessions before their race.
4. National practice may be combined with Regional practice and qualifying; however, National qualifying may not be combined with Regional practice or qualifying.

C. National races must be scheduled for a number of laps equaling at least 45 miles. The SOM may reschedule all or any of the races to 30 minutes if conditions warrant.

D. When professional races are scheduled with National races at the same event, compliance with all National race standards is required. (See 3.1.1.A. - C. and 3.1.2., when appropriate).

3.1.2. Double National Races

A Double National is two National races conducted at one track on one weekend. In addition to 3.1.1., Double National races will be run under the following conditions:

A. The practice sessions, if any, for both Nationals may be combined into a single session.

B. There must be a separate qualifying session for each event.

C. The total time available for all practice and qualifying must be a minimum of 70 minutes, exclusive of “hardship” sessions.

D. Standard points will be given for each event.

3.1.3. Dual National Races

A Dual National is two National races on one weekend conducted at a track where Regions from at least two divisions regularly sanction events. The purpose of a Dual National is to provide entrants with one in-division and one out-of-division National event during one weekend at one location. Dual Nationals will be run under the following conditions:

A. Both Nationals meet all the rules of a National race. (See 3.1.1.)

B. The two Nationals are separately sanctioned by different Regions, which are not from the same division.

C. The two Nationals are conducted separately, under separate sanc-

tions, entries, and fees.

D. A driver may enter either or both National races, but he must enter each separately, as if they were single Nationals.

3.1.4. Restricted National Races

A Restricted National is an experimental event developed under the direction of the leadership in Club Racing. A Restricted National may include semi-Pro race groups during a National weekend, and/or fewer National classes than those listed in Section 9. All other requirements of 3.1.1. and 3.1.2., when appropriate, apply.

3.1.5. Regional Races

Regional races are ordinarily open to the following competitors:

A. Drivers holding SCCA National, Regional, or Vintage licenses, along with those holding SCCA Novice Permits as provided in AppC.2.7.F.

B. Canadian Residents holding current ASN National Licenses, are 21 or years of age or older, and are members of SCCA.

C. SCCA members holding competition licenses issued by SCCA-approved organizations. The event Supplemental Regulations must list the particular organizations and licenses or else include the entire group by reference to this section.

The organizations whose licenses are currently approved by SCCA for competition in Regional events are as follows:

1. BMW CCA Club Racing Full Competition
2. Confederation of Autosport Car Clubs (CACC) Competition
3. FIA Issued by any sanctioning body
4. Historic Sportscar Racing (HSR) HSR License
5. ICSCC *Area Road Racing or International Road Racing licenses*
6. IMSA
7. Midwestern Council of Sports Car Clubs (MCSCC) Full
8. Miller Motorsports Park Racing Association Full Competition License
9. NASA Full Competition
10. Ontario Region CASC Regional
11. Porsche Club of America Full Competition
12. SCCA Pro Racing
13. Sportscar Vintage Racing Association (SVRA)
14. Vintage Auto Racing Association Full Competition
15. Vintage Motorsports Council VMC
16. Waterford Hills Road Racing Club Full
17. West Canada Motorsport Association Amateur

Please direct any questions about licenses to the Club Racing department in the National Office.

Section 9.1 identifies the classes of cars eligible to compete in Regional races.

3.1.6. Restricted Regionals

Restricted Regionals are Regional races conducted under Supplemental Regulations that include particular classes, classes of cars not recognized in the GCR, and/or invited drivers only. Restricted Regionals may be run concurrently with other classes of events. Vintage cars MAY NOT be grouped with any other type of cars.

Unless otherwise stated in the Supplemental Regulations, Restricted Regionals are open to Canadian residents holding current ASN National Licenses who are 21 years of age or older and who are SCCA members.

3.1.7 Concurrent National and Regional Races

Note: For 2011, all Concurrent National and Regional Races shall be approved by the SCCA Board of Directors.

A. All National Race requirements stated in 3.1.1 shall be met, except licenses and the prohibition against combining National and Regional cars on track.

B. No driver may receive credit for more than one race toward license renewal in a single race session (points may be awarded in multiple championships at the discretion of the organizers).

C. Separate National and Regional race results shall be produced (combined results may be produced at the discretion of the organizers).

D. Novice license holders may participate unless specifically excluded in the event Supplementary Regulations. To be included in the National race results and to receive credit for National race participation, the driver shall hold a current SCCA National competition license.

E. Procedures for determining who may participate when a race group is oversubscribed shall be included in the Supplementary Regulations.

3.1.*8* Drivers' Schools

Drivers' Schools provide instruction in safe and sportsmanlike wheel to wheel competition. They shall be conducted according to the GCR and under the following conditions:

A. The entered cars will be divided into at least open and closed wheel groups, which will run separately from one another. Sports Racing cars may be grouped with Formula cars. (See 3.5.2.)

B. Drivers' Schools will be conducted separately from any other kinds of competition events, and they may not be combined on the same day with any other classification of competition, except when approved and sanctioned by SCCA.

C. Only students undergoing instruction and their instructors may participate on track. A driver holding an SCCA competition license or a license from any organization listed in 3.1.5.C., above, may be admitted as a student at the discretion of the Chief Steward.

D. Provided all safety equipment is in order, a Showroom Stock car ineligible for other kinds of race events because of the model year is allowed at an SCCA Drivers' School.

3.1.*9* Vintage/Historic Races

Vintage/Historic races may be included on SCCA programs under the following conditions:

A. The Vintage/Historic segment is provided for in the sanction and Supplemental Regulations.

B. Each driver is an SCCA member holding an SCCA National, Regional, Vintage license or an SCCA Novice Permit as provided in AppC.2.7.D. and F., or an SCCA approved license.

The following organizations' licenses are currently approved by SCCA for competition in Vintage/Historic events:

1. Classic Sports Racing Group (CSRG)
2. Historic Sportscar Racing (HSR)
3. Society of Vintage Racing Enthusiasts (SOVREN)
4. Sportscar Vintage Racing Association (SVRA)
5. Vintage Auto Racing Association (VARA)
6. Vintage Motorsports Council (VMC)

Please direct any questions about licenses to the Club Racing department in the National Office.

C. *All Vintage cars must conform to Appendix Z of the SCCA Vintage Competition Rulebook (VCR), publication #5684 dated March 2005. Roll cages as defined in Appendix Z of the current VCR are required in all production cars considered model year 1973 or later. There is no requirement for cars from model year 1972 or earlier to have roll cages; however, members are encouraged to install roll cages in such cars where satisfactory installation can be achieved. At a minimum, roll bars are required for production cars from model year 1972 or earlier. Where allowed, roll bars must conform to Appendix Z of the current VCR.*

Driver restraint systems must meet current GCR requirements. Driver window safety net or arm restraints are required in closed cars. Open cars require arm restraints.

D. Vintage/Historic cars shall not be allowed to be grouped with any other SCCA racing classes (except in a Drivers' School).

E. Former Spec Racer Renaults may compete in Vintage/Historic events. (See 9.2.1.G.)

3.1.10. Practice Days

Practice Days are non-competition track days scheduled, sanctioned, and insured under standards included in Appendix B. Practice Days are conducted according to the GCR. In addition, the following standards apply:

A. A Practice Day sanction is valid for 1 day.

B. Each driver is an SCCA member holding an SCCA National, Regional, Vintage license or an SCCA Novice Permit showing Drivers' School requirements signed off as provided in AppC.2.5.D. and F., or an SCCA approved license.

C. 9.1 identifies the classes of cars eligible to compete in Practice Days.

D. Officials meet the requirements of 5.1.3.

E. At a minimum, a Chief Steward and Assistant Chief Steward – Safety are required.

F. Unless required by the track, or local authorities or ordinances,

Sound Control is not in effect.

G. Staffing and equipment meet the requirements of 5.4. and 5.5.

H. Formula cars may be combined with Sports Racing cars, but may not be combined with other categories.

I. A maximum of 25 cars per mile may be on the course simultaneously, with no exception.

3.2. SCHEDULING RACE EVENTS

SCCA race date/event scheduling policies and procedures are found in AppB.1.

3.2.1. Postponing or Canceling Events

All or part of an event may be postponed or canceled under the following conditions:

A. Provision is made in the Supplemental Regulations for the event, or

B. The SOM order that all or part of the event be postponed or cancelled for reasons of safety or forces beyond their control.

1. Postponement. After consulting with the organizing region, the SOM may postpone the classes not afforded the opportunity to race (as opposed to practice or qualify), provided a scheduled date is available at the same facility within the same competition year. The postponed races shall be run under the original sanction number.

2. Cancellation. An entire event (all classes, all sessions) postponed for more than 24 hours is considered cancelled, and entry fees shall be returned. If an event is cancelled during the competition, then the entry fees shall be prorated and a reasonable portion of the entry fee shall be returned.

3. Credit for Start. If an entire event is cancelled (all classes, all session), there shall be no credit for a start. If a race is postponed, the competitors have the option of either competing in the postponed race, or receiving a prorated refund and being classified as DNS for that race, provided they have participated in a practice session or are shown on the qualifying results for that race.

3.3. SANCTIONING RACE EVENTS

A sanction is the documentary approval granted by SCCA Club Racing to organize and conduct an SCCA race event.

A. SCCA race date/event sanctioning policies and procedures are found in the SCCA Operations Manual.

B. Organizers of SCCA sanctioned races may be the SCCA or one or more SCCA Regions.

C. The SCCA name and emblem (logo) may be used only with events sanctioned by SCCA.

D. The National Office will issue a sanction within 5 business days from date of receiving the completed sanction application.

3.3.1. Submitting to the GCR

Any organizer who applies for a sanction to conduct an SCCA race event expressly agrees, and will acknowledge the following in writing if requested:

A. Familiarity with the GCR.

B. Unreserved agreement to any consequences of not complying with the GCR.

C. Renunciation of any right to recourse, except with the written consent of the SCCA, to any arbitrator or tribunal not provided for in the GCR.

3.3.2. Applying for an SCCA Sanction

Sanction applications must be submitted for approval at least 45 days prior to the scheduled date of the event with the following:

A. Completed current SCCA Sanction Application Form

B. Appropriate sanction fee

C. Entry Form

D. Supplemental Regulations

E. Schedule of Events

3.3.3. Sanction Requirements

In addition to the items listed in 3.3.2., the following conditions must be met before a sanction number can be issued:

A. The race event is listed on the official SCCA calendar.

B. SCCA has approved the course for Club Racing.

C. The organizer owes no event related fees for prior events. See AppB.2. for information about event fees.

3.4. COURSES

The words “course” and “circuit” and “track” are considered interchangeable for the purpose of these rules.

3.4.1. Types of SCCA Course Approval

SCCA must approve any course for a Club Racing event. For a particular track, the SCCA may:

A. Limit the types of events.

B. Restrict the number of cars which may be started simultaneously or in total.

C. Restrict the number of entries which may be accepted for an event.

D. Restrict the classes and categories of cars.

E. Restrict the license grades of drivers.

F. Disapprove the course for all SCCA speed events.

3.4.2. Application For An Event On An Unapproved Course

A Sanction Application for an event at a course not already approved by the SCCA must be submitted at least 2 months before the proposed event, and must include a full description of the course and facilities, including a scale map.

3.5. SUPPLEMENTAL REGULATIONS AND ENTRY FORMS

Organizers shall not distribute Supplemental Regulations or Entry Forms for an SCCA event prior to obtaining an SCCA sanction.

3.5.1. Required Contents of Supplemental Regulations

Supplemental Regulations establish specific conditions for an event. Before a sanction can be issued, the Club Racing Board must approve all Regulations different than those of the GCR. Supplemental Regulations must contain the following information for the event:

A. The name, location, dates, nature, and event type.

B. The sanction number and type of sanction.

C. Conspicuously placed words: "Held under the SCCA General Competition Rules."

D. The name and address of the organizers.

E. A complete description of the event, including the length and types of sessions and races, the classes of cars eligible, and the race groups (See 3.5.2.)

F. Schedules and locations of on and off-track activities, inspections, and meetings.

G. The name and address of the Registrar or other person to whom the entry is to be sent, closing date for receipt of entries, and amount of the entry fee.

H. The names of the Chief Steward and the Chairman SOM.

I. The way results will be determined and trophies and prizes awarded.

J. The times official scales will be available for competitors to check the weight of their cars.

K. All other information necessary for the proper conduct of the event, not already included in the GCR.

3.5.2. Combining Classes into Race Groups

A. The speed and performance differences among the cars may not be extreme.

B. Any Formula classes may be combined with Sports Racing classes.

C. It is more preferable to combine Sports Racing classes with appropriate Formula classes than with Production or GT classes.

D. It is preferable not to combine FA, FB, FC, FE, and FM with FV and/or F500. FV may be combined with F500.

E. SRF may be combined with F and H Production and GTL.

F. Formula classes shall not be combined with cars from any other category except Sports Racing. The only exception is in race groups consisting solely of Vintage/Historic cars.

G. It is preferable not to combine GT1, AS, ST, T1, T2, T3, STO, and STU with DSR, CSR, SRF, S2, FP, HP, or GTL.

3.5.3. Additional Classes

Organizers may include classes not specified in 9.1, provided the conditions and specifications are clearly outlined or referred to in the Supplemental Regulations. Including those additional classes may not jeopardize the full schedule of sessions for the SCCA recognized classes.

3.5.4. Multiple Types of Events on a Single Weekend

It is not generally permitted for race groups from different types of events on the same weekend to run simultaneously.

3.5.5. Changing Supplemental Regulations

All changes to the Supplemental Regulations and event schedule must be approved by the SOM. Except for modifications to the schedule and/or class groupings, no changes may be made to the Supplemental Regulations after the pre-entry period is open unless either there is unanimous agreement by all affected competitors who have already entered,

or the SOM determine changes are necessary for reasons of safety or forces beyond their control.

3.5.6. Required Contents of Entry Forms

A. Spaces for full names, addresses, membership numbers, and license type and numbers of entrant(s) and driver(s), and for driver's Region of Record.

B. Space for full description of cars to be entered.

C. The words: "Held under the SCCA General Competition Rules."

D. Spaces for signature(s) of entrant(s) and driver(s) for waiving liability and/or indemnity declarations, acknowledging the authority of the GCR, declaring that the entered car complies with the provisions of the GCR, and the person(s) to be notified in case of accident.

E. The sanction number assigned to the event.

F. Any other information required for the clarification of all other details of the event.

3.6. INSURANCE

SCCA race/event insurance policies, procedures, and coverages are found in AppB.3. and the Insurance Handbook.

3.6.1. Insurance Requirements

All SCCA sanctioned events must be insured for Event Liability and Participant Accident insurance coverage. Event Liability may be provided by the SCCA Event Insurance Plan or by an equivalent policy if it is obtained in compliance with the procedures described AppB.3.3., "Alternative Liability Insurance Procedures for Events." Participant Accident coverage must be provided by the SCCA Event Insurance Plan.

3.6.2. Insurance Availability

The Chief Steward must delay an event until he is satisfied that the required insurance is in place.

3.6.3. Waivers

All participants must be properly credentialed for the event. Each adult participant must also either sign the SCCA waiver at the event or have an SCCA annual waiver on file at the National Office and present his hard card it at registration. Each minor participant must also have the event minor waiver signed by one or both parents or have an executed annual minor waiver on file at the National Office and present his hard card at registration.

3.6.4. Scaffolding At SCCA Events

Using scaffolding is prohibited unless the event Chief Steward specifically authorizes it, after consulting with SCCA Risk Management. Separate insurance coverage for this exposure may be required.

3.7. ORGANIZER'S ADDITIONAL RESPONSIBILITIES

In addition to the responsibilities listed above, organizers must fulfill the following requirements:

3.7.1. Entry List

An official list of competitors entered in the event shall be made available to all entrants at no charge as early as possible before the event begins.

3.7.2. Results

The organizer is responsible to distribute results as follows:

A. Printed, photocopied, or electronic Official Race Results sent to the National Office within 5 days of the event.

B. For National races, 1 printed or photocopied or electronic copy of Official Qualifying Grids and Race Results sent to the appropriate Divisional Pointskeeper(s) within 5 days of the event.

C. Printed or photocopied Official Race Results available for each entrant at the event; or mailed at the organizer's expense or emailed (at the entrant's option) within 7 days of the event, 7 days of the notification of any protest decision affecting Results, or 7 days of a Court of Appeals decision, whichever is applicable and whichever comes first.

3.7.3. Post-Event Reporting
The organizer is responsible to submit all SCCA required audits and appropriate fees to the National Office within the time limits, as specified in AppB.2. and the SCCA Insurance Handbook.

3.7.4. Event Program
If an event program is offered to the public, it must contain the following information:

A. The words "Official Program" in prominent lettering and the SCCA emblem on the front cover.

B. The sanction number(s) assigned to the event on the front cover.

C. Conspicuously placed words: "Held under the SCCA General Competition Rules."

D. The name of the organizer.

E. Name, location, and date of the event.

F. Schedule of planned activities and sessions.

G. Names of entrants and drivers entered for each race group, with identifying numbers, classes, and marques for their cars.

H. A detailed list of awards for each competition, if other than those provided in the GCR.

I. The names of the principal officials.

3.7.5. Private Event
A private event is one where no admission charge of any kind is made. Participants' entry fees or other charges to participants are not admission charges. If the organizers have established that their event is private, they are expected to observe the following requirements listed below. Attendance at private events is limited to the following:

A. Drivers and entrants, plus a nominal crew, whose size may be limited by the Supplemental Regulations, not to exceed a total of 6, including the driver and entrant.

B. SCCA members and their guests whose names have been furnished to the Registrar before the event; guests shall identify themselves at registration.

C. Any other individual having a specific assigned duty at the event, who holds and has available SCCA membership and license for the assigned job, plus one guest each.

D. Minors under 12 years of age are not counted under these limits.

E. Non-spectator Club Races are considered private events.

F. The appropriate insurance premium for a spectator event will be required if there is any local newspaper, radio, television, or similar

publicity placed by or traceable to the course owner, the organizer, or a representative of either of them.

3.8. AWARDS

Drivers compete primarily for points and trophies in SCCA events, although financial awards may also be offered.

3.8.1. Distributing Awards

Organizers must have event awards for each race available to distribute as soon as Official Results are determined, or after the period for receiving protests has elapsed so placing drivers can take their trophies with them. Awards will not be distributed until after any protest affecting their distribution has been settled. If notified of an intent to appeal any decision which would affect awards, the SOM will direct that the distribution be held pending Court of Appeals decision.

3.8.2. Trophies

National and Regional event trophies will be awarded on the following minimum basis for each participating class:

Number of Starters	Trophies Awarded for Finishing Position
2	1st place only
3	1st and 2nd
4	1st, 2nd, and 3rd

3.8.3. Points For Co-Driver

For events that allow or require co-drivers, full series points (if any) will be awarded to a co-driver who completes 1/3 of the race distance, or the minimum distance specified in the Supplemental Regulations.

3.8.4. Expense, Starting, or Appearance Money

Organizers, car owners, or sponsors may offer, and participants may accept expense, starting, or appearance money.

3.8.5. Prize Money

The SCCA may require as a condition of an event sanction that any prize money be deposited in escrow a satisfactory period of time prior to the start of the event, and also that the SCCA controls the distribution of the prize money.

3.8.6. Refuse Awards

A driver may refuse all event/series awards by notifying the Chief Steward before his race. He must meet all other GCR requirements, including impound. He may earn a lap record and, provided he finishes, he may receive license credit for the race.

3.9. CHAMPIONSHIPS

3.9.1. Division Championships

At the conclusion of each calendar year's season of National races, the SCCA designates a champion in each Division for each National class, based on the criteria outlined below.

A. Division Championship Points

The number of National races a driver may enter is unlimited, but the Division Championship is based on points earned by a driver for his best 7 National race finishes in the same class. No more than 3 of the best 7 race finishes may be outside his Division of Record (See 3.9.1.F.2.)

B. Race Points Chart

Points in SCCA National races are awarded to all finishers through 9th place as follows:

Position	Points
1st	12
2nd	9
3rd	7
4th	6
5th	5
6th	4
7th	3
8th	2
9th	1

C. Dead Heat Race Finish

When there is a dead heat in a race finishing position, the total points for the positions tied are added up and divided equally between or among the tied drivers. Points then continue starting with the next untied position.

D. Race Points Awarded Only to One Driver

Points are awarded to one driver per car per national race group. When more than one driver competes in the same car in the same race group, neither is awarded points.

E. Division Championship Ties

Ties in final Division Championship standings are resolved based on the drivers' records of first place finishes, then second place, then third, as needed; including any first, second, and third place finishes beyond the drivers' best 7. If two or more drivers have identical records, they are tied for the position in the standings.

F. Driver's Division of Record

1. Region of Record. A driver may belong to an unlimited number of Regions, but he must designate one of them as his Region of Record for the purpose of accumulating Division Championship points in his class.

2. Division of Record. A driver's division is determined by his designated Region of Record recorded in the membership files at the National Office.

3. Additional Classes. A driver who competes in more than one class may accumulate Divisional Championship points for the additional class(es) in his Division of Record or in other divisions. For each class not in his Division of Record, the driver must declare his intent with the following information:

   - the class in which he will compete
   - the division where he plans to accumulate points
   - confirmation from the Region where he is an associate member in that division

   The declaration and supporting information must be received in writing from the driver by the Club Racing Department prior to the third National race in the secondary division(s).

   A driver may not accumulate Divisional Championship points in more than one division for the same additional class.

4. *Change of Division. A driver may change his Division of Record by separately notifying in writing the Club Racing and the Membership Departments in the National Office, and his newly designated Region of Record in the incoming division prior to the beginning of the third National race weekend in either the incoming or the outgoing division – whichever is earlier. It is the driver's responsibility to ensure that all three parties are notified within the allowed time.*

3.9.2. SCCA Runoffs

SCCA schedules and conducts an event each year called the SCCA Runoffs, open to all drivers from each Division Championship who meet the invitation qualifications. The SCCA Runoffs are conducted under the provisions of 3.1.1. and determine the SCCA National Champion in each eligible class.

SCCA publishes the Supplemental Regulations defining driver and car eligibility and other event details.

A. Invitations to the SCCA Runoffs

Invitations are issued to all drivers in each Runoffs-eligible class in each Division Championship based on the following minimum qualifications:

1. *The driver must start at least 4 National races, two of which must be in the driver's Division of record, and finish at least 4 National races, regardless of Division, in the current race season.*
2. *The driver must satisfy one of the following requirements:*
   a. *Finish in the top three in class for his Divisional Championship (3.9.1).*
   b. *Finish in the top 50% in the National Point Standings (3.9.3) for his class.*

      Example: If 100 drivers score points in a class in the current race season, the top 50 will receive an invitation.
   c. *Score enough class points in the current year National Points Standings to have placed in the top 50% in the previous year's National Points Standings for his class.*

      Example: If 100 drivers scored points in a class in the previous race season, with the 50th place driver having scored 35 points, then any driver who scores 35 points or more in his class in the current race season will receive an invitation.
3. *He must qualify in the same class(es) in which he is entering the Runoffs, though he may compete in any car eligible for the class(es).*
4. *If a driver has designated a division/class combination for additional class qualification, he must meet the requirements of 3.9.1.A. and 3.9.1.F.3.*

B. Defending National Champions

Every current defending National Champion will be invited to enter the Runoffs under the following conditions:

1. The entry will not be included in the total count of Runoffs invitations.
2. The driver must hold a current SCCA National Competition

License.

3. He may compete *only* in *the* class *being defended*.
4. He will not bump anyone from the field who was invited based on the qualifications in 3.9.2.A.
5. He will not receive Runoffs tow funds if he has not qualified under 3.9.2.A.
6. *The provisions of this section may not be invoked two years in a row, even if he repeats as National Champion.*
7. *In addition, a current defending National Champion, who has not met the Runoffs invitation requirements in 3.9.2.A, may be accepted as an entrant even if he did not finish at least 4 National races in the same class during the current year.*

C. Refusal Of Entry

A competitor whose entry has been refused for the SCCA Runoffs may protest and appeal only the refusal of his entry, and he may protest up to 15 days before the start of the event. (See 4.4.6.)

D. Number of Races

The number of races included in the Runoffs will not exceed 24, and may be less.

E. Invited Runoffs Classes

All National classes are invited to the Runoffs. If there are not at least 10 Runoffs entries in a given class, a National Champion will not be recognized in that class.

1. A class with a minimum of 10 qualified cars entered in the Runoffs will name a National Champion.
2. A class with fewer than 10 qualified cars entered in the Runoffs may race as a supplemental class, but will not name a National Champion.
3. Classes will be combined as needed to limit the number of race groups to 24 and no more than 2 classes will be combined into any race group.

3.9.3 National Point Standings

National Point Standings will be compiled for each National Class. The National Point Standings assigns base points on the same schedule as the Divisional Championships (3.9.1.B) and adds one point, up to a maximum of 10, for each car that a driver finishes ahead of in the final results. A driver's best seven points races in the same class count in the National Point Standings regardless of the Division in which the points were earned.

Notes:

4. PARTICIPANT LICENSING, EVENT CREDENTIALS, & ENTRIES

4.1. SCCA RESERVATION OF RIGHTS

SCCA is a private, not for profit organization, and it reserves the right to deny any license, or to revoke any previously issued license, for any reason or no reason, except that SCCA will not deny or revoke a license solely on the basis of race, creed, color, sex, or national origin.

4.2. SUBMITTING TO THE GCR

Anyone who applies for an SCCA license expressly agrees, and will acknowledge the following in writing if requested:

A. Familiarity with the GCR;

B. Agreement without reservations to any consequences of *not* complying with the GCR;

C. Renunciation of any right to recourse, except with the written consent of the SCCA, to any arbitrator or tribunal not provided for in the GCR.

4.3. PARTICIPANT LICENSES

4.3.1. SCCA Licenses

SCCA issues Competition, Crew, and Officials' Licenses based on qualifications and experience. Information and procedures about Competition and Official's licensing and grades are found in Appendix C. Any individual may be a Crew member. Crew must be SCCA members to gain access to the pit lane and other hazardous areas. (See 4.5.3.)

4.3.2. SCCA Membership

SCCA licenses are issued only to SCCA members in good standing. The types of membership are found in the SCCA Operations Manual.

4.3.3. Expiring License and Membership

All licenses show the month and year of expiration, which coincides with the individual's SCCA membership anniversary date. Any participant who is properly registered for an event may participate for its duration even if his membership and license expire while the event is in progress.

4.3.4. Possessing a Membership and License

A participant registered for an event must have his current membership and license in his possession. His license must be the proper level for the type of event and activity. All entrants must be members of the SCCA and they are subject to all provisions of the GCR. (Refer to 7.2.I.)

4.3.5. Presenting a License

When requested, any official, driver, entrant (if Entrant Licenses are required), or crew must show his license to an official.

4.3.6. Required Membership and License

Only licensed members may be in hazardous areas. Non-members may only be where the hazards do not exceed those to the general public. The exception is that employees of services hired by the organizer or the track who enter restricted areas to fulfill their job responsibilities (such as ambulance, wrecker, and fire crews) are not required, but are recommended, to be SCCA members. For the purpose of determining a hazardous area, the definition "outside the protection of a positive barrier" is used.

4.4. RACE EVENT ENTRIES

An entry submitted and accepted according to the GCR and event Supplemental Regulations is an agreement to participate in that event. Provided the entrant or driver has made every effort to participate, the organizers will adhere to their published refund policy. Failure by any party to adhere

to the entry agreement may be treated as a breach of the GCR.

4.4.1. Entering an Event
An entry is considered official and a competitor is considered entered in an event under the following conditions:

A. The competitor is in good standing and his competition privileges have not been suspended.

B. An official event Entry Form has been completed, signed (or if an electronic entry, the approved Club Racing consent box is checked), submitted to and received by the organizers.

C. The entry fee has been submitted to and received by the organizers.

D. All monies due the SCCA have been submitted and paid.

4.4.2. Entering Multiple Classes
An entrant or driver who enters more than one class under a single sanction number must submit separate entry forms and fees for each class.

4.4.3. Withdrawing an Entry
If an entry is withdrawn prior to the entry deadline, there is no penalty, and the organizers will return the entry fee. If the entry is withdrawn after the entry deadline, the organizers may return all or part of the entry fee. An entrant or driver may be found in violation of the GCR if he is officially entered in one event but participates in a different competition held on the same day.

4.4.4. Falsifying an Entry
An entry containing a false or incorrect statement may be determined null and void by the SOM or other reviewing group. The entrant or driver may be found in violation of the GCR, the entry fee may be forfeited, and additional penalties imposed.

4.4.5. Racing Under an Assumed Name
Unless the Club Racing Department authorizes a driver to use an assumed name, he must sign all official documents with his legal name for all events requiring an SCCA Competition License.

4.4.6. Refusing an Entry
Even if an entry meets all the requirements outlined in 4.4.1., above, the organizers have the right to refuse an entry without giving a reason. If an entry is refused, notification must be sent to the entrant or driver at the address on the Entry Form as soon as possible, and normally at least 5 days before the event.

4.5. EVENT CREDENTIALS

4.5.1. Waivers
Anyone participating in an event must sign the SCCA Release and Waiver of Liability Agreement before an event credential (pass) will be issued.

4.5.2. Photo ID

A. An SCCA-issued photo ID is required for any registered event participant who is an SCCA licensed member.

B. The member's name, current photograph, SCCA membership number, and credential for the event must be clearly visible.

C. Accepted photo IDs are those issued by the SCCA National Office, the Club Racing Department, the SCCA Pro Racing Department, or an SCCA Region. Any of these must be honored by any SCCA Region.

D. Identification cards from any other organization, including civil

authorities, will not be accepted.

E. A non-member or weekend member will be issued a paper pass or a wristband rather than a photo ID.

4.5.3. Hazardous Area Credentials

SCCA members who are licensed and who are 18 and older may be issued credentials allowing them access to hazardous areas.

SCCA members 15 to 18 years old may be issued credentials allowing them access to hazardous areas only if they possess a Minor License issued by the SCCA National Office. (See AppC.1.4., AppC.2.5., AppC.3.2.) Otherwise, they may not enter any area where the hazards exceed those of the general public.

4.5.4. Non-hazardous Area Credentials

Non-member participants may be issued credentials which do not allow them access to hazardous areas.

Guests of the organizer or spectators may be issued credentials or tickets which do not allow them access to hazardous areas.

Notes:

5. OFFICIALS, THEIR DUTIES, OPERATING PROCEDURES, AND EQUIPMENT

5.1. PRINCIPAL OFFICIALS

The principal officials, who direct the event, may include the following:

Race Chairman

Chief Course Marshal

Chief of Emergency Services

Chief of Flagging

Chief of Communications

Chief Registrar

Chief of Sound Control

Chief Starter

Chief Technical Inspector

Chief of Timing and Scoring

Chief Observer

Chief of Pit

Chief of Grid

Chief of Race Administration

Judges

Stewards of the Meeting (SOM)

Chief Steward

Assistant Chief Steward–Safety (ACS – Safety)

Except for the SOM, these officials may have assistants to whom any of their duties may be delegated.

5.1.1. Required Stewards

At a minimum, there shall be a Chief Steward, an ACS – Safety, and at least 2 SOM (including a Chairman and one other licensed steward in addition to any Stewards-in-Training).

5.1.2. Appointment

A. Runoffs

The SCCA will appoint all Runoffs officials.

B. SCCA National, Regional, and Restricted Events

The Division's Executive Steward appoints all event Stewards, and the Chairman of the Stewards Program approves the Chief Steward for a National Race. The organizer conducting the event appoints all other officials, subject to approval by the Executive Steward.

5.1.3. Minimum Grades of Licenses

For the following events, these minimum licenses are mandatory:

Stewards	National	Regional	Drivers' School
Chief	National*	Divisional	National
Chairman of the SOM	National/Senior*/Divisonal*	Divisional	Divisional
*Appointed by the Division's Executive Steward with the approval of the Chairman of the Steward's program			

Chiefs of Specialty	National	Regional	Drivers' School
Emergency Services	National	Divisional	National
Flagging and Comm	National	Divisional	National
Grid Marshal	National	Divisional	National
Pit Marshal	National	Divisional	National
Registrar	National	Divisional	National
Starter	National	Divisional	National
Technical Inspector	National	Divisional	National
Timing and Scoring	National	Divisional	Divisional
Sound Control	Divisional	Divisional	Divisional

5.1.4. Right to Oversight
The SCCA reserves the right to designate a qualified person to evaluate any competition.

5.1.5. Plurality of Duties
Except for the Chief Steward and the Chairman SOM, the same person may hold more than one official position at an event.

5.1.6. Separation of Duties
An official may not perform duties not clearly attached to his appointment(s).

5.2. RACE CHAIRMAN
5.2.1. Race Chairman Responsibilities
The Race Chairman organizes an event. Specifically, he will:

A. With the promoters, organizers, and the Chief Steward determine the schedule (including all activities during the event) and draft the Supplemental Regulations.

B. See that all Entry Forms are distributed.

C. Arrange for insurance conforming to SCCA requirements, and for a copy of the Insurance Certificate to be presented to the Chief Steward, the Chairman SOM, the ACS – Safety, and the track before the beginning of the event.

D. Arrange for trophies and their proper distribution.

E. Arrange for the use of the course and all necessary facilities.

F. See that qualified officials are appointed.

G. Work with each Chief of Specialty to assure that they have the proper equipment and facilities.

5.3. COURSE MARSHAL
The Course Chief prepares and maintains the course and performs other related duties assigned to him by the ACS – Safety and the Chief of Emergency Services (Chief of ES) in conjunction with the Chief Steward.

5.4. EMERGENCY SERVICES – MEDICAL AND FIRE SAFETY

The Chief of ES, in conjunction with the Race Chairman and ACS – Safety, staffs and equips the event for medical and fire safety.

5.4.1. Purpose

A. To establish equipment and personnel needed to affect a workable medical, fire, and safety plan. Detailed plans need to be based on the specific conditions at the event facility and local, state or federal protocols and regulations.

B. The Chief of ES shall be familiar with local, state, and federal regulations for accident and medical emergencies. At tracks where SCCA volunteer medical personnel cannot perform medical duties, the Chief of ES and the ACS – Safety will be responsible to ensure that proper medical equipment is available, and that proper medical procedures are being followed.

C. A copy of the medical and fire safety plan for each track must be submitted by the Divisional Executive Steward to the National Office.

5.4.2. Personnel

A. Medical

The following apply:

1. There will be a Chief Medical Official who is either: 1) Physician, MD or DO, preferably with an EMS background and licensed to practice in at least one (1) state or, 2) Paramedic or equivalent (advanced life support technician) with an active license or, 3) PA (Physicians Assistant) or APN (Advanced Practice Nurse) trained and experienced in EMS and emergency medicine with an active license. The Chief Medical Official may be a person contracted with the track, and not an SCCA member, but he must coordinate with the Chief of ES. At the Runoffs the Chief Medical Official must be a physician.

2. There should be a second licensed medical person (EMT, paramedic, physician's assistant, registered nurse, etc) to assist the Chief Medical Official(s).

3. Medical personnel report to the event Chief Medical Official.

4. Medical units should be stationed so that the maximum time for a first medical response is no more than 2 minutes.

B. Fire Fighters

1. At least 2 persons who are trained to use the equipment should be assigned to each fire truck. A minimum of 2 persons should be assigned to each fire truck.

2. Fire fighters report to the Chief of ES. If no Chief is assigned, then to the ACS – Safety.

C. Wrecker Operator(s)

1. At least 1 person who is trained to use the equipment will be assigned to a wrecker.

2. Wrecker personnel report to the Chief of ES. If no Chief is assigned, then to the ACS – Safety.

5.4.3. Required Equipment

A. Ambulances

1. During any competition, there shall be at least 1 ambulance at the track which meets all Advanced Life Support requirements

for the jurisdiction in which the event takes place (where "jurisdiction" means the governing body, such as a township, city, or county). A Basic Life Support ambulance is acceptable only if the track medical facility is equipped and staffed for Advanced Life Support.

2. Arrangements for transportation from the track by EMS service should be in the medical operations protocol.

B. Fire Truck

At least 1 fire truck shall be equipped to fight automobile fires. This vehicle should be stationed so that maximum response time is 2 minutes at a speed not to exceed 50 mph.

C. Wrecker

At least 1 wrecker must be capable of lifting any race car in the event. The wrecker may also serve as a fire truck if it is properly equipped and staffed.

D. Telephone

A telephone or radio in the tower or medical duty station must be able to contact community emergency services and hospitals.

E. Other Equipment

1. If a power compound rescue tool and trained operator is on call and available within 10 minutes, it does not have to be located at the event site.

2. Comparable equipment may be substituted with the advance approval of the Divisional Executive Steward.

5.4.4. Operating Rules

A. Emergency Plan

The Chief of ES and the ACS – Safety will verify that a written emergency plan has been distributed to all emergency and supervisory personnel before the event begins.

B. Briefing

All emergency service personnel should be briefed to review duties, duty stations, equipment, race circuit characteristics, vehicle, and other protocols.

C. Dispatching

Dispatching emergency vehicles onto the track must be authorized by the Chief Steward, according to procedures agreed on in advance by the Chief Steward, Chief(s) of Flagging and Communications, Chief of ES, and ACS – Safety.

D. Hospital Arrangements

1. The Race Chairman and Chief Medical Official establish a primary route to the primary and secondary hospital prior to an event, and advise the vehicle drivers.

2. In advance of the event, the Chief Medical Official must confirm that adequate hospital staff and facilities are available, along with the protocols to be followed, and notify the Chief of ES.

E. Identification of Personnel

Emergency services personnel should be readily identifiable by some means other than the usual passes (e.g., vest, arm bands, jackets).

F. Start of Race

All emergency vehicles shall be staffed with engines running for the first lap of each race.

G. Suspension of Racing

Racing must be suspended if the personnel specified in 5.4.2. or the equipment specified in 5.4.3.A. - C. are no longer on the premises or are unable to perform their assigned duties, or if communications with emergency vehicles are interrupted.

H. Counter-Race Direction Towing

Specific approval of the Chief Steward is required to tow a car in counter-race direction at any time or under any condition during an event. Violating this rule may result in penalties as specified in Section 7.

5.5. FLAGGING AND COMMUNICATIONS

5.5.1. Chief of Flagging and Communications

The Flagging and Communications Chief establishes and administers the Flagging and Communications organization; he recruits, trains, and assigns qualified individuals within the specialty. There may be separate Chiefs for Flagging and for Communications.

5.5.2. General Organization

The purpose of Flagging and Communications is to provide course control by:

A. Informing the drivers, through flags, lights, or other signals, of the conditions of the course, the condition of their cars, or of any unusual conditions affecting the running of the event;

B. Establishing and operating a communications system which includes all corner stations and race control, where all communications affecting the control of the event are conducted. Race control maintains direct communications with the Chief Steward. Racing must be suspended if communications between race control and the corner stations or between race control and the Chief Steward is interrupted;

C. Informing the Chief Steward and other officials, through the communication network, of the condition of the course and the competing cars, and of any situation requiring decisions and/or action by the officials;

D. Relaying information and instructions from the Chief Steward to the emergency vehicles and equipment around the course as well as to the race drivers and corner workers;

E. Acting to protect the lives and property of drivers, workers, or spectators in the event of an incident;

F. Maintaining a clear course;

G. Keeping the required log of all communications on the race network by a person located in the immediate vicinity of the Operating Steward.

5.5.3. Corner Stations

A. Number

The number, location, and staffing of corner stations must assure that the entire course is can be seen at all times and that areas of the course not immediately visible to oncoming race cars are covered.

B. Location

Corner stations will be located according to the following criteria:

- the corner personnel have a clear view of the area to be covered
- the oncoming drivers have maximum visibility of the flags and corner personnel
- corner crew have maximum protection from out of control automobiles

The yellow flag must be displayed when a corner worker or other personnel move to a less protected or unprotected area.

C. Personnel

Corner stations should be staffed with at least 4 people: a flagger, a communicator, a safety response, and a corner captain in charge of the station. If necessary, stations may be staffed with a minimum of 2 people.

At least 20 percent of the Flagging and Communications personnel should have experience in fighting actual or simulated vehicle fires.

D. Equipment

Along with communications hardware, each corner station will be equipped with sufficient flags and fire extinguishers so that they may respond adequately to any situation.

5.6. REGISTRATION

The Chief Registrar establishes and administers the Registration organization and systems; he recruits, trains, and assigns qualified individuals within the specialty.

The Chief Registrar accepts, certifies, and processes all entries and issues credentials for drivers, crew, and Officials and posts all required signs/placards in the registration area.

Registration provides all entry information to Timing and Scoring in the format requested by T&S. Information from late entries must be given to T&S promptly.

Registration provides entry information to the Stewards as requested.

5.7. SOUND CONTROL

5.7.1. Sound Control Chief

The Sound Control Chief shall be responsible for monitoring and reporting sound levels of all racing vehicles at sound-controlled events in accordance with the GCR. Specifically, he shall:

A. Ensure that the sound monitoring equipment is located at an official certified site.

B. Ensure that readings shall be made in accordance with the GCR.

C Advise race control as soon as possible of any sound readings above the track limit.

D. Submit post-race reports to the Chairman of the SOM.

E. Monitor weather and ambient conditions throughout the day.

F. Perform field calibration of the equipment in accordance with the GCR.

G. Ensure that yearly calibration of the equipment (meter, cables, microphone, and field calibrator) has been performed by the manufacturer or a certified laboratory.

5.7.2. General Procedures and Requirements

Competitors carry sole responsibility to determine that their vehicles

comply with Sound Control Regulations at each event.

Sound Control may be in effect for all events*, as approved by the Division Executive Steward*. All cars will be monitored and readings will be posted for competitors' information. A driver registering a single sound level reading over the maximum for the event shall not be black flagged. If a driver is black flagged due to sound, the car shall not re-enter the course until corrective steps are taken.

5.7.3. Standards

A sound level instrument (meter) that meets American National Standards Institute (ANSI) S1.4-1983 Class 2 or better shall be used. The primary maximum for SCCA Sound Control shall be a sound pressure level of 103dB "A" frequency weighted (dBA) measured on the fast response setting at 50 feet (+/- 2 feet) from the edge of the track pavement, and/or artificial markers indicating track edge. *Other* maximum levels may be imposed at specific venues or events. These *alternate* levels shall be noted in the Supplemental Regulations. All sound readings shall be truncated to the lower whole number. (Anything after the decimal point is ignored.)

Proper location and use of all test instrumentation is essential to obtain valid measurements.

A. Acoustic calibration procedures should include extension cable influence.

B. Field calibration shall be done at least every 4 hours while in the operating mode.

C. The microphone shall be 3.5 feet (minimum) above the ground surface, 2.0 feet (minimum) above the level of the roadway, no more than 6 feet above the level of the roadway. Whenever possible, it is recommended (but not mandatory) that the microphone shall be located on the outside of the track between the race car and the outside perimeter of the racing facility, aimed into infield areas.

D. Weather conditions should be recorded every hour when conditions are unstable, or otherwise every 2 hours.

5.8. START

5.8.1. Chief Starter

The Chief Starter directs and manages the officials in the specialty, ensuring that directions given to competing drivers by flag, hand, and body signals are done so as prescribed by the GCR with respect to starting, suspending, and ending a race.

5.8.2. Responsibility

The Starter operates directly under, carries out the orders of, and is responsible solely to the Chief Steward.

5.8.3. Function

The Starter controls the competing drivers by conveying to them the orders of the Chief Steward.

5.8.4. Location

The Starter shall be stationed in a position that will provide maximum visibility to the competing drivers. The Starter shall have immediate communication with the Chief Steward.

5.8.5. Equipment

The Starter must be equipped with a complete set of flags required by the GCR.

5.9. TECHNICAL AND SAFETY INSPECTION

5.9.1. Chief Technical Inspector

The Chief Technical Inspector assures that cars comply with the GCR and

Supplemental Regulations. Specifically, he:

A. Approves cars that comply with all safety regulations.

B. Inspects cars at the request of the Chief Steward and recommends inspecting cars to the Chief Steward.

C. Reports cars that do not comply with the GCR to the Chief Steward.

The Chief Technical Inspector approves every car before it competes, according to procedures defined in Sections 5.9.2 and 9. A driver or entrant whose car is not approved and who subsequently competes or who presents it for recheck without the corrections specified may be penalized as provided in Section 7.

5.9.2. Inspecting Automobiles

A. Annual Inspection

A car must have full and complete Annual Technical Inspection by a tech inspector holding either a Divisional or National license once a year (12 months). If the car passes the inspection, the tech inspector enters the date of the safety harness expiration in the Vehicle Logbook; he then stamps, decals, or inscribes approval; dates and signs the Vehicle Logbook. The driver's safety equipment does not have to be inspected at the same time the car is inspected, but it must be inspected by or at the driver's first race of each calendar year. (See 9.3.20.A.)

B. Minimum Event Safety Inspection/Tech Sticker

Following the Annual Technical Inspection, minimum inspection for each event requires reviewing the current Vehicle Logbook. If it is in order, a Tech sticker is issued. The driver's safety equipment does not need to be re-inspected.

All cars must display a Tech Sticker signifying successful completion of technical inspection to enter the course. Technical inspection assists event officials in determining, in their judgment, eligibility to participate in a SCCA sanctioned event. The technical inspection does not ensure, certify, or warrant that the vehicle or any part of it is safe or totally and ultimately compliant with all applicable rules nor does it in any way change the fact that the driver, crew members, and vehicle's owner are ultimately responsible for the safety and operation of the vehicle and equipment. By conducting a technical inspection, SCCA and each of its directors, officers, employees, and officials, make no representations, warranties, or assurances that a technical inspection, including the review of any written information, will do any or all of the following:

- Detect every or any problem with a vehicle or a driver's personal equipment or clothing; or
- Detect every problem with rule compliance; or
- Prevent bodily injury, death, or personal monetary damage.

The participant agrees that he bears the ultimate responsibility at all times to ensure the safety of his vehicle and equipment, and compliance with all SCCA rules, regulations, and agreements, including but not limited to those contained in the GCR. In addition, in the case of technical violations, he acknowledges, understands, and agrees that he is responsible to fully know every component of his vehicle and that even if a third party (for example, an engine builder) has caused his vehicle to be noncompliant, he will still be responsible for and will be charged with any applicable violation and penalty.

C. Re-inspection

A car must be re-inspected if damage or deficiencies from the car's

previous event(s) are noted in the Vehicle Logbook or if the car changes category.

Inspection above the minimum level (see 5.9.2.B.) may be performed when:

- The Vehicle Logbook indicates no competition for 3 months or more during the current year; or
- for vehicles as specified in Supplemental Regulations; or
- at the request of the Chief Steward.

Throughout the racing season, the Tech crew is encouraged to perform regular re-inspections through walk around observation in the pits and paddock, or through special impounds by group or class with the concurrence of the Chief Steward.

D. Alterations or Damage After Inspection

Cars which have been altered or damaged after they have been approved at event Tech Inspection are subject to re-inspection and re-approval.

5.9.3. Impound

A. Post Race Impound

Post-race impound is mandatory at all National races and at the Runoffs and is recommended at all other events.

B. Impound Safety

There should be at least 1 nominal 10 pound dry chemical agent capacity, minimum UL 60 BC or ABC rated, CO2 or equivalent Halon fire extinguisher present in the impound area.

C. Minimum Impound Inspection

Unless otherwise specified in the Supplemental Regulations, the first 3 finishers in each class shall be immediately impounded for a minimum of 30 minutes after their race is completed. The Chief Steward may direct that additional finishers in any class may likewise be impounded. It is the driver's responsibility to know his finishing position and present his car to impound immediately, without going to the paddock. Failure to do so promptly will be reported to the Chief Steward, and may result in penalty.

For each impounded car, the weight and at least 2 other items appropriate for the class will be inspected, as agreed upon by the Chief Steward and the Chief Technical Inspector. The Chief Steward may also order that a wheel or intake choke(s) or restrictors be removed during impound for inspection. These inspections are not subject to the fees outlined in 5.12.2.C.5. Additional inspections may be conducted through the protest procedures outlined in 8.3.3.

If there is any doubt about the weight, the car must be weighed in both directions. A cars that is underweight in impound will be reported to the Chief Steward, is subject to penalty, and the weight will be noted on the next page of the Vehicle Logbook. The car must be weighed at the next event and must meet the proper minimum weight before being allowed to qualify.

The Chief Technical Inspector will report any questions or doubts about a car's compliance to the Chief Steward.

5.9.4. Official Scales

A. The scales at the event are the official scales for the event. The Supplemental Regulations will include the hours scales will be available for drivers to weigh their cars.

B. The following scale configurations are acceptable:

- platform scales,
- individual scales that weigh 1 axle (2 wheels) at a time, or
- 4 individual scale pads that each weigh a single wheel.

If all 4 wheels cannot be weighed simultaneously, the driver must be weighed separately from the car.

C. Certification

Scales or test weights must be certified, as follows:

1. On-site certification by a commercial scale service within 90 days prior to the event, OR
2. Use at the track of calibration weights, totaling 100 pounds up to 250 pounds total as recommended by the scale manufacturer, or minimum 250 pounds total if no recommendation is provided by the scale manufacturer for individual wheel scales; minimum 750 pounds total for platform scales. Where applicable, the calibration recommendation by the scale manufacturer (e.g., a manual or letter from the manufacturer) must be available at all times during an event where the scales are in use.

5.10. TIMING AND SCORING

5.10.1. Chief of Timing and Scoring

The Chief of Timing and Scoring (Chief of T&S) is responsible for accurately timing and scoring the event, specifically:

A. Recruiting, training, assigning, and supervising qualified personnel to time and score the event.

B. Providing the Chief Steward and the SOM any times and results they request.

C. Maintaining records of official times and lap charts for all competing cars.

D. Compiling and publishing the Official Results of all competitions, submitting copies of completed Official Results to the Race Chairman, to the SOM, the organizers, and the SCCA, and submitting complete Official Results (including qualifying) within 5 days to the Divisional Pointskeeper.

E. At spectator events, working closely with the Press Officers, press, and other media, as well as with circuit, radio, and/or television announcers, providing qualifying information, results, and any other data requested, as quickly as possible.

F. Titles are used in this section in a functional sense. The Chief of T&S may delegate any task to any member of the Timing and Scoring staff as appropriate.

5.10.2. Approved Systems

Transponder/transmitter systems used in SCCA Club Racing shall be manufactured by AMB or be compatible with AMB systems. Those other transponder/transmitter systems which are currently in use may continue to be used, but shall not be the primary systems for any National race.

5.10.3. Timing and Scoring Systems

A. The use of two Timing and Scoring systems is required for SCCA National races and is recommended for Regionals and Drivers' Schools.

B. Any Timing and Scoring system used for a National or Regional race should enable the T&S staff to produce the following information: a set of grids for each race group, a set of time cards for each car from qualifying and the race, continuity tapes, independently prepared lap charts, provisional results, and final results. For Drivers' Schools, the T&S system should enable the T&S staff to produce the time on track for each session and comprehensive time for all sessions for each student, if requested by the Chief Instructor.

C. Should there be insufficient staff to run two separate systems as described, the Chief of T&S should notify the Chief Steward. The Chief Steward may decide to waive the two-system requirement, allowing the Chief of T&S to use the staff in the most productive manner possible. In this case, the primary function during qualifying is to establish grid positions. During a race, the emphasis should be on scoring the race and recording any timing-related race information that is possible with the available staff. Timing of class leaders during races is recommended to provide the information described in Section 5.10.4.B.3. No protests concerning the Timing and Scoring requirements will be accepted.

5.10.4. Results

A. Provisional Results

A lap chart or a printout showing the order of finish and number of laps completed for each car shall be posted and titled as Provisional Results. The time of posting will be on the Provisional Results with the Chief of T&S's initials or signature, and a public address announcement will be made.

B. Final Results

1. At the expiration of the protest period (30 minutes or the time stated in the Supplemental Regulations), Provisional Results may be considered final if Tech has cleared impound and the Chief Steward and/or SOM have no pending actions. The Final Results should be titled as Final or Official Results and shall include the following types of information: description of event, timing and scoring information, and driver information.

2. The description of the event shall include: location of event, date, sanction number, name of conducting region, length of course, and scheduled duration of race (laps or miles).

3. The timing and scoring information shall include: total number of entries, including DNF's and DNS's, the overall and class finishing positions for all starters, the number of laps completed for all starters, the overall time of the race, the winner's margin of victory, the winner's average speed, the fastest lap time for all starters and any new course records.

   A DNF is defined as a car that did not complete the required number of laps to be a finisher (half the number of laps completed by the overall leader, rounded down to the nearest whole integer. A DNS is defined as any car that turned a wheel on the track during practice or qualifying, but did not start the race. See 6.10.3.A.

4. The driver information shall include: driver's full name, hometown, state, region of record, membership number, car number, and car make and model*,* car make and model, *and sponsor information.*

5 . Optional information on the Final Results might include: the

overall time and average speed for each class winner, pit stop information, *and* accident reports. This information may be available on a separate document, such as an Entry List.

6. When a car is given a lap, time, or finishing position penalty, the reason should be shown on the Final Results, including the GCR reference.

7. When a car is disqualified, excluded, or withdrawn, the results should list the car at the bottom of the finishing order, showing the true finishing order as affected by the disqualification, exclusion, or withdrawal. The results should show the final overall and class positions, as adjusted, for all finishers. The reason for the disqualification or exclusion should be shown on the Final Results, including the GCR reference.

8. *A driver not competing for event/series awards will be listed on the final results in the correct finishing position with a notation citing 3.8.6. No points will be assigned, if any would have been earned. An earned lap record remains intact.*

5.10.5. Media

It is strongly recommended that at spectator events the Chief Timer and Scorer meet with the Course and Regional Press Officers in order to establish close cooperation with the announcer and all media, and to arrange for fast transmission of unofficial and official Timing and Scoring information to these people.

It is always preferable that the Circuit announcer and any radio and television announcers receive information relating to Timing and Scoring from members of the Official Timing and Scoring personnel, via the Circuit or Regional Press Officer.

5.11. ADDITIONAL OFFICIALS

5.11.1. Driver Observer

A Driver Observer is an optional official who occupies a post along the course assigned by the Chief Steward, or by the Chief Observer, if there is one. Driver Observers are controlled by the Chief Steward and they report all incidents which occur in their assigned section of the course to the Chief Steward.

5.11.2. Press Officer

A Press Officer is an optional official who advises other Officials on press information and who acts as liaison with the promoter's press director, if any. Chief Officials and SOM cooperate with the Press Officer in carrying out his responsibility to advise the press on matters of public interest.

5.11.3. Judges

Judges are optional officials who may perform one or more of following duties:

A. Starting Judges report to the Chief Steward any false starts immediately after they occur. Finishing Judges declare the order in which cars cross the finish line. Judges of the Fact decide whether a car has touched or passed a given line or rule on other facts of the same type provided in the Supplemental Regulations.

B. A Judge's determination may not be protested.

C. A Judge may correct his determination with the approval of the SOM.

5.12. STEWARDS

5.12.1. Stewards of the Meeting (SOM)

The SOM are responsible only to SCCA, and they enforce compliance

with the GCR and Supplemental Regulations. They act primarily in a judicial capacity, and therefore shall not incur any responsibility for the organization or execution of an event.

A. Powers of the SOM

1. Settle any dispute within the administrative functions, or protest arising from an event, subject to the rights of appeal provided by the GCR.
2. Hear and act on Requests for Action from the Chief Steward. (See Section 8.1.2.)
3. Impose any penalty permitted by the GCR and Supplemental Regulations. (See Section 7.)
4. Appoint substitutes to replace any Stewards or Officials not able to perform their duties. This power shall be used by the remaining Steward or Stewards to ensure that there are always at least 2 SOM.
5. Modify the Supplemental Regulations. (See 3.5.5.)
6. Alter the schedule.
7. Modify the position of the starting or finishing lines where necessary to ensure the safety of drivers and spectators.
8. Amend the results of a competition:
   a. Based on a correction or error by the Chief of T&S.
   b. To take into account a time, distance, or lap penalty against a competitor.
   c. To change the sequence of finishing positions in case a competitor is disqualified.
9. Postpone a competition for reasons of safety or forces beyond their control.

B. Chairman of the SOM

One of the SOM shall be appointed Chairman of the SOM for the event. He may not be a member of the organizing Region at National events, and should not be for Regionals and/or Drivers' Schools.

1. Observer's Reports

As soon as practical after the conclusion of an event (not later than 10 days), the Chairman of the SOM shall forward to the Club Racing Department an Observer's Report that includes:

a. Details of all protests,

b. Actions taken,

c. Penalties imposed (including reprimands and suspensions to be noted in driver's file),

d. Notice(s) of intention to appeal and appeals, including appeal fee(s),

e. Fine(s) collected,

f. Full details of any incidents,

g. Official results of all competitions,

h. General comments and recommendations of the SOM on

the organization and conduct of the event.

2. Notice of Probation

The name(s) of anyone placed on probation must be faxed or emailed to the Club Racing Department on Monday following the event. Required information includes the name, member number, event date/location, and the name of the Chairman SOM. The confiscated license(s) and tear-off coupon(s) from the Probation Letter(s) must be sent with the Observer's Report.

3. Notice of Suspension

The name(s) of anyone whose competition privileges were suspended must be faxed or emailed to the Club Racing Department on Monday following the event. Required information includes the name, member number, event date/location, and the name of the Chairman SOM. The appropriate paperwork and suspended license must be sent with the Observer's Report.

5.12.2. Chief Steward

The Chief Steward is the executive responsible for the general conduct of the event under the GCR and the Supplemental Regulations. He has the powers and the duties set out in this Section, and he may delegate any duties to Assistant Chiefs. See Appendix D, Duties, Authorities, and Responsibilities of the Chief Steward, for specific powers of the Chief Steward.

A. Execution of the Event

The Chief Steward shall:

1. Execute the program of competitions and other activities safely by controlling drivers, their cars, the Officials, and workers from the commencement of activities until the time for protests from the last competition has expired.
2. Determine whether Officials are at their posts and report any absences to the SOM.
3. Ensure that all Officials and workers are provided with necessary information.
4. Collect all reports and other official information to determine the results.
5. Provide any information required to enable the Chairman SOM to prepare the Observer's Report.
6. Authorize a change of driver or car.
7. Convey to the SOM any proposal to modify the schedule of competitions.
8. Prevent an ineligible driver from competing.

B. Maintenance of Order

The Chief Steward:

1. Shall keep order in conjunction with public safety authorities who are policing the event.
2. May exclude from the event any entrant, driver, crew, official, worker, or SCCA member who is guilty of misbehavior.
3. May exclude from participating any worker or official who is ineligible for the position to which he is assigned or who

the Chief Steward determines is incapable of carrying out his duties.

4. May order any person who refuses to obey the order of any responsible Official or of a public safety officer removed from the premises.
5. May prohibit any driver or car considered dangerous from competing.
6. Shall convey a report to the SOM of entrant or driver misbehavior. This may be accompanied by a Request for Action. (See 8.1.2.)
7. Shall receive protests from entrants, drivers, or officials and immediately transmits them to the SOM.

C. Powers of the Chief Steward

The Chief Steward may:

1. Disqualify a driver or an ineligible car.
2. Remove technical inspection stickers.
3. Disallow qualifying times.
4. Direct cars to be impounded at any time during the event.
5. At his discretion and without necessarily receiving a request to do so, order (or request the SOM order) disassembly and inspection of any entered car to determine whether it complies with the GCR. If the car is found to be compliant, the race organizers stand the expense of the disassembly, inspection, and reassembly. If it is not compliant, the entrant shall bear the expense, in addition to whatever penalties the Chief Steward may assess or the SOM may direct after receiving the Chief Steward's report. A representative of the race organizers authorized to approve financial expenditures must formally approve the bond established for disassembly, inspection, and reassembly before disassembly begins. If the process is the result of a Chief Steward's Action, the Chief Steward is directly responsible for monitoring all facets of the procedure until the time when the impounded parts are either retained by SCCA or returned to the competitor, in the same way the Chairman SOM does for a protest or RFA.
6. Convey report(s) of any breach of the GCR or Supplemental Regulations to the SOM. This report may be accompanied by a Request for Action. (See 8.1.2.)
7. Impose a fine of up to $100.
8. Prevent an ineligible car from competing.
9. Reprimand.
10. Impose time, lap, event points, or position penalty.

D. Additional Powers of the Chief Steward

See Appendix D. for additional/specific powers of the Chief Steward.

5.12.3. Assistant Chief Steward – Safety

The Assistant Chief Steward – Safety is responsible to the Chief Steward for the following:

A. Investigate accidents and forward the originals of all reports,

including original releases, to the Risk Management Department of SCCA.

B. The same day, notify Risk Management via telephone of any accident which involves serious injury to a participant or any injury to a spectator.

C. Mail copies of the material sent to the Risk Management Department to the Divisional Safety Administrator.

D. During the event, report to the Chief Steward any hazards requiring further investigation or action.

E. Perform the duties delegated by the Chief Steward.

F. Supervise Emergency Services personnel and equipment in conjunction with the Race Chairman (pre-event) and the Chief of ES (during the event).

5.12.4. Compliance Checking Crew
When assigned to an event by the Club Racing Department, each member of this crew will have the official status of an Assistant Chief Steward. Their sole responsibility is to advise the Chief Steward of cars not in compliance with the GCR and/or the Supplemental Regulations for the event. The Chief Steward may delegate all or any part of his powers under 5.12.2.C., and 8.1.1, to them.

6. RACING RULES AND PROCEDURES

6.1. FLAGS

Flags convey the commands or information indicated below. They must be obeyed immediately and without question. The content of this section cannot be amended by any event Supplemental Regulations.

6.1.1. Meaning of Each Flag

A. GREEN FLAG (Solid Green)

When displayed, the green flag indicates that the course is clear, and that racing is underway. The green flag is ordinarily shown only by the Starter.

B. YELLOW FLAG (Solid Yellow)

STANDING YELLOW – Take care, Danger, Slow Down, NO PASSING FROM THE FLAG until past the emergency area.

WAVED – Great Danger, Slow Down, be prepared to stop – NO PASSING FROM THE FLAG until past the emergency area.

DOUBLE YELLOW, DISPLAYED AT ALL STATIONS – Indicates the entire course is under yellow (full course yellow). All stations will display double yellow flags for all pace and safety car laps. SLOW DOWN, NO PASSING. However, cars may carefully pass emergency vehicles and other cars that are disabled or off pace (see 6.6.2.).

NOTE: A driver may encounter several flags before reaching the emergency area. The requirements are still the same: SLOW DOWN, NO PASSING.

C. BLUE FLAG (Blue with Diagonal Yellow Stripe)

Another competitor is following very closely or is trying to overtake. This flag may be displayed standing or waving, depending upon the speed differential.

D. SURFACE CONDITION (Yellow with Vertical Red Stripes)

Take care. A slippery condition exists, or debris is present on the racing surface. This flag is displayed standing.

E. WHITE FLAG (Solid White)

Caution and take care for a slow moving race car, ambulance or other emergency vehicle on the racing surface. The standing flag is displayed for 2 flag stations prior to the vehicle in question. In addition, a standing white flag will be displayed during the first lap of each race group's first session of the day to indicate the location of the flagging stations.

F. BLACK FLAG (Solid Black)

CLOSED BLACK FLAG (Furled) – Pointed or shaken at an individual car from the Starter's stand (optionally, accompanied by a number board indicating the car number): WARNING for driving in an unsafe and/or improper manner. Continued unsafe and/or improper driving will result in an OPEN BLACK FLAG.

OPEN BLACK – Displayed from the Starter's stand with a number board indicating the car number: Proceed directly to the pits and the location designated by the Chief Steward or event Supplemental Regulations for consultation with Officials. DO NOT TAKE ANOTHER LAP.

NOTE: This flag and number board may also be displayed at station(s) elsewhere on the course.

OPEN BLACK, DISPLAYED AT ALL STATIONS – The session has been stopped; all cars must stop racing, and proceed directly and immediately to the pits, exercising extreme caution. This flag will be displayed with an 'ALL' sign at the Starter's stand and the sign may also be shown at station(s) elsewhere on the course.

NOTE: THE BLACK FLAG CAN ONLY BE DISPLAYED BY ORDER OF THE CHIEF STEWARD AS RELAYED THROUGH RACE CONTROL.

G. MECHANICAL BLACK FLAG (Black with Orange Ball)

Displayed from the Starter's stand with a number board indicating the car number. There is a mechanical problem with the car. Proceed directly to your pit or the location designated by the Chief Steward or event Supplemental Regulations. DO NOT TAKE ANOTHER LAP.

NOTE: This flag and number board may also be displayed at station(s) elsewhere on the course.

H. CHECKERED FLAG (Black and White Checks)

Displayed at Finish to indicate that the session is finished. Continue cautiously to the pits.

I. RED FLAG (Solid Red)

Displayed at each station and on the Starter's stand – EXTREME DANGER – THE SESSION HAS BEEN STOPPED. Come to an immediate, controlled stop at the side of the race track (preferably before and within sight of a staffed station or where specified in the event Supplemental Regulations). When released by an official, proceed cautiously to the pits. Once a red flag has been displayed, it will not be withdrawn until all cars have come to a stop.

NOTE: THE RED FLAG CAN ONLY BE DISPLAYED BY ORDER OF THE CHIEF STEWARD AS RELAYED THROUGH RACE CONTROL.

6.1.2. Lights Instead of Flags

Supplemental Regulations will state where on the course and for what purpose lights, if any, will be used.

6.2. RULES OF THE PADDOCK

6.2.1. Paddock Area Defined

The area where a car parks when not participating in its sessions is the Paddock. Event Supplemental Regulations may delineate the Paddock location and assignment of equitable amounts of space to each competitor.

6.2.2. Retiring to the Paddock

A car that retires to the paddock during its qualifying session, and then returns to the track automatically forfeits qualifying times earned before retiring. A car that retires to the paddock from the pits or the track during its race may not return to the track unless the Supplemental Regulations or the Chief Steward specify.

6.3. RULES OF THE PITS

6.3.1. Pit Area Defined

The area that is part of or connects with the access roads leading to and from the racing surface is the hot pit lane, which is where competition vehicles park when not on course during their sessions. There must be a protective barrier between the hot pit lane and the area where support equipment and crews are located.

6.3.2. Required Equipment

There must be fire extinguishers with a nominal 10 pound dry chemical agent capacity and a minimum UL 60 BC or ABC rating placed at 50 foot

intervals along the pit wall. If there will be refueling in the pits during the race, each team must provide 1, minimum 10 pound /60 BC or ABC rated fire extinguisher for each car.

6.3.3. Fueling
Fueling is not permitted in the pits unless authorized by the Supplemental Regulations or the Chief Steward.

6.3.4. Authorized Personnel in the Pits
Crew members in the hot pits must be event credentialed SCCA licensed members.

6.3.5. Number of Crew Members in the Hot Pit Lane
Unless the Supplemental Regulations or the Chief Steward provide otherwise, no more than 4 crew plus the driver or drivers may attend to any car in the hot pit lane.

6.3.6. Control
Pit crews are under the control of the Pit Marshal at all times.

6.3.7. Pit Barrier
Crew may only cross the pit barrier when their car is in the hot pit, except to signal the driver, when no more than 2 crew may cross the barrier.

6.3.8. Overshooting the Pit
If a car overshoots its pit location, the car must either be pushed back into the pit location by hand, or else continue for another lap. No car may be pushed back to the pit location if doing so would create an undue hazard.

6.3.9. Air Bottles/Gas Cylinders
All compressed air bottles/gas cylinders with a pressure in excess of 200 psi must have a protective structure around their gauges and valves when in the pit area.

6.4. THE GRID
6.4.1 General

A. 1 car in a class shall constitute a class. A car may not compete in more than one race class in the same race group.

B. Number of Cars allowed on Course

A maximum of 25 cars per mile may be on the course or started simultaneously in any type of session.

The Division's Executive Steward may increase or decrease the 25 car limitation for any or all race groups.

6.4.2 Establishing the Race Grid

A. A starting position is qualified by a driver/car combination.

B. The Chief Timer certifies official qualifying times to determine race grid positions. Cars are positioned on the race grid in order of their official qualifying times without regard to engine displacement or class, with the fastest cars at the head of the grid. Any other method of determining starting positions must be described in the Supplemental Regulations and approved by SCCA.

C. Qualifying time ties are broken by comparing the second fastest times, and then the third, if needed, and so on until a difference is found.

D. The fastest qualifier may select the inside front row position (in the direction of the first turn) or the outside. If he does not choose, the pole position is presumed to be the inside. If he selects the outside position, the second qualifier is assigned the inside, the third outside, the fourth inside, and so on throughout the entire

grid.

E. Each driver/car combination must qualify within 120% of the qualifying time of the fastest qualifier in his class to be allowed to start his race. The Chief Steward may waive this requirement and may allow non-qualifiers to grid behind qualifiers.

F. Cars that are not in position on the grid prior to the 1 minute signal relinquish their starting positions. They will be held behind other cars, and must start from the back of the field.

6.4.3. Qualifying for Oversubscribed Classes

When the number of cars entered into a single class race group exceeds the maximum number of cars per mile, the following qualifying procedures apply:

A. The class is split into 2 qualifying groups.

B. The grid is determined according to 6.4.2.

C. Alternatively, if the Chief Steward determines that track conditions are significantly different for the 2 groups, he may recommend the parallel column procedure in which one half of the race grid is taken from each session, and gridded in columns by group, by time. The fastest car is assigned the inside position on the front row and he is followed in that column by the cars from his session in qualifying time order. The SOM must approve this alternate procedure.

6.4.4. Starting the Engine on the Grid

In all SCCA competitions, engines shall be started by the driver sitting in the normal driving position, except F500, using an on-board or supplementary power supply. Carburetor or fuel injection systems may be manipulated and/or primed in the starting process. Push starts are permitted only as specifically authorized as specified in 6.4.5.

6.4.5. Push Starts on the Grid

A car that cannot start on the grid may be push started under the supervision of the Grid Marshal, provided it is back in position prior to the 1 minute signal. Cars push started after the 1 minute signal, or not in position at the 1 minute signal relinquish their grid positions. They will be held behind other cars, and must start from the back of the field.

6.4.6. Fueling

Fueling is not permitted on the grid unless authorized by the Supplemental Regulations or the Chief Steward as specified in 6.3.3.

6.4.7. Air Bottles/Gas Cylinders

All compressed air bottles/gas cylinders with a pressure in excess of 200 psi must have a protective structure around their gauges and valves when in the grid area as specified in 6.3.9.

6.5. RACES STARTS

6.5.1. SCCA Standard Rolling Start

The SCCA standard rolling start will be used at all SCCA races unless an alternate procedure has been approved by the Division's Executive Steward and is included in the event Supplemental Regulations.

A. The Chief Steward will instruct when the 5 minute and 1 minute warnings should be given to the cars on the grid, indicating the time remaining before the start of the race. These signals must be plainly audible or visible.

B. Engines should be started at or before the 1 minute signal.

C. At or before the expiration of the 1 minute warning, the cars will

be released to begin the pace lap.

D. One pace lap precedes all races, unless the Chief Steward, at his discretion, authorizes an additional unscored pace lap.

E. If a pace car is used, it will be positioned at the head of the pack, with emergency lights flashing. When the field is released, the pace car may begin at a brisk pace, but will be sufficiently slowed before it pulls off the track to allow orderly grouping of the field. Drivers may not pass the pace car until it pulls off the track and the pole car will maintain the speed of the pace car before it pulled off track until the green flag.

If the race is not started, another pace lap will be run. Depending on conditions, the pace car may overtake the field and resume its function.

The front row drivers must be advised not to pass the pace car and that the pace car may return to its position for the additional pace lap if there is no start.

If a pace car is not used, the pole car will serve that function from its position in the front row, complying with the instructions of the Chief Steward or his designee.

F. The Starter shall be safely located where the majority of the drivers in the field can clearly see him as they approach his position. He shall remain motionless, with the green flag hidden, and no other flags visible.

G. The Starter will start the race by suddenly and continuously waving the green flag until all cars have passed the start line if the field is:

1. at a constant slow speed;
2. well bunched and in line; and
3. close enough to the Starter that the majority of the drivers can see the flag.

Racing begins and passing may occur throughout the field when the green flag is displayed.

H. The Starter will abort the start by displaying no flag and shaking his head in the negative if the field is not in good order, or if some drivers have improved their positions by moving out of line or by passing prior to the waving of the green flag. This advises the drivers to proceed on another pace lap. Drivers raise one hand to confirm that the start is aborted. (Except as provided in 6.5.2.D.)

I. Any additional pace lap(s) following an aborted start are under double standing yellow flags at all stations, and they are scored as race laps. Timing starts when the pole car crosses the timing control line, unless otherwise specified by the event Supplemental Regulations.

J. A car may not improve its position in the field after the cars are released from the grid for the pace lap.

1. A car that fails to start with the pack or falls out of position during a pace lap relinquishes its grid position and may rejoin only at the back of the field.
2. A car that is disabled and cannot keep the pace should not hold up the field. The driver must signal that his car is disabled by raising an arm, pulling to the side of the course, and staying

well off the racing line. Other cars may safely pass the signaling vehicle. The driver of a disabled car should seek assistance at the nearest corner station or pit at the first opportunity.

3. A car that improves its position relative to the field during the pace lap by moving forward, moving out of line, or passing before the green flag is displayed may be penalized for a false start. However, if a car drops out of the pace lap(s), everyone in the column behind that car must close up behind the car in front; moving up under this circumstance is not considered improving position or passing under yellow.

4. If a false start has occurred, and the race has been started, the driver(s) may be black-flagged and held in the pits or at the start line for up to 1 minute, and other penalties may also be imposed, as specified in Section 7.

K. The SCCA Standard Rolling Start is not a flying start. The pace lap may begin at a brisk pace, but must be sufficiently slowed before the start line to allow orderly grouping of the field. The actual speed immediately prior to the start is dictated by the types of cars, size of the field, and course layout. The same official should brief the front row drivers before each race, preferably the Starter, under the direction of the Chief Steward.

6.5.2 Split Starts

A. Split starts are recommended when there is a large differential in speed or cornering ability between the classes or categories in a single race group. The procedures for a split start must be explained in the Supplemental Regulations or at a Drivers' Meeting.

B. The Chief Steward will determine the class(es) in each segment. Segments will contain entire classes of cars, including those cars with no qualifying time. The class containing the car with the fastest qualifying time will be a part of the first segment. The cars assigned to each segment will be gridded by qualifying time, regardless of class.

C. Each segment should be led by a pace car, if possible. A following segment should have the previous segment in sight on the longest straight.

D. Split Starts

1. Provided each segment is properly formed, each will receive a separate green flag.

2. If the first segment receives a green flag, the race is considered to have begun for the subsequent segments when they cross the control line, regardless of the flags displayed by the starter.

3. The flags displayed by the starter have their normal meanings.

4. If the first segment receives a green flag, but on track safety conditions require an immediate full course yellow, cars in subsequent segments should fall into single file grid order and make every effort to safely catch the back of the first segment.

5. Drivers in each segment shall not improve their position until their respective green flag is displayed. Jump starts may be penalized.

E. A starting judge should be appointed for a split start.

6.5.3. Late Starters

After the field has left the grid, the Chief Steward may release cars that were not in position at the 1 minute warning to join the back of the pack either from the grid at the beginning of the pace lap or from the pit exit after the race has been started.

6.6. PACE AND SAFETY CAR

6.6.1. Operation and Control

Pace car procedures are located in 6.5.1.E.

The Chief Steward is responsible for the control and safe operation of the pace/safety car(s), and he must approve the communicator/observer and the driver, who must either hold or have held an SCCA National competition license, or have other qualifying experience.

6.6.2. Safety Car Procedures

The Chief Steward may use a safety car as necessary to control the field and to assure expeditious restarts.

A safety car will enter the course only under double yellow flags.

When dispatched, the safety car, with emergency lights flashing, will gather the field under steady and reduced speeds that are appropriate to track conditions. Drivers must make every effort to safely catch the field to form a single and evenly-spaced line behind the safety car. The leader must keep pace with the safety car, and not balk the field, which shall follow the safety car in a safe and sportsmanlike manner, allowing sufficient room for fellow competitors. Cars must pass any on track incident(s) well under control.

If the safety car is not dispatched in front of the leader, an official in the safety car will wave cars by until the leader is behind it. Race cars may not pass the safety car unless waved around by that official. Any car passing the safety car without being directed may be black-flagged into the pits, and other penalties may be imposed, as specified in Section 7.

A driver of a car that is disabled or cannot keep the pace should not hold up the field. He must signal that his car is disabled by raising an arm, pulling to the side of the course, and staying well off the racing line. Other drivers may safely pass the signaling vehicle. A driver of a disabled car should seek assistance at the nearest corner station, or pit at the first opportunity.

The safety car will maintain the established pace, extinguish the lights, and exit the course prior to a restart. Drivers must maintain the safety car's pace and not improve their positions or begin racing until the green flag has been displayed to restart the race.

If there is no safety car, the race leader will perform its functions.

6.7. STOPPING A SESSION

6.7.1. Methods

When it is necessary to stop a session, the Chief Steward may do any of the following:

A. Order a black flag with an "ALL" sign at Start (this sign may also be shown at additional stations elsewhere on the course) and a black flag at all other flag stations around the course.

B. Order a red flag at Start and all other flag stations. Further instructions will be conveyed by officials.

C. Order the checkered flag to be displayed to the lead car if at least

50 percent of its scheduled time or distance has been completed.

6.7.2. Assistance During Race Session Stoppage

Replenishing or assisting cars is allowed after *a practice or qualifying session is stopped and before it is restarted, but not* after a race session is stopped and before it is restarted.

6.8. RESTARTING A RACE

If a race is stopped, the Chief Steward may:

A. Restart in the original starting order. (See 6.7.2.)

B. Restart the cars single file in the *physical* order *they crossed the control line* on the last completely scored lap.

When a race is restarted, each pace lap counts as a race lap. In a timed race, the clock is restarted when the field is dispatched. Any method of restarting the engine is permitted.

6.9. RAIN RACING

If a race is started in the dry, and it starts to rain on all or part of the course, the Chief Steward may use one of the following procedures:

A. If the race has covered half or more of the scheduled distance or time, it may be finished with the checkered flag.

B. If the race has not reached half distance or time, the black flag "ALL" procedure shall be used to bring all cars into the pits, and 15 minutes will be allowed to install rain tires, at the driver's discretion. The cars will restart single file in the overall order of the cars on the last completely scored lap.

6.10. TIMING LINE; STARTERS, FINISHERS, AND WINNERS

6.10.1. Starting Line for Timing and Scoring

Unless otherwise defined in the Supplemental Regulations, the start line is the control line where timing begins when crossed by a car.

6.10.2. Race Starter

One of the following conditions must be met for a car to be considered a race starter:

A. The car receives a green flag at the start of the race.

B. If the start is aborted, the car crosses the control line.

C. The car is anywhere on the course when the green is displayed, but not in the pits.

D. The car completes the pace lap for the first start.

E. The car enters the race any time after the start before the checkered flag is displayed.

6.10.3. Race Finisher

A. A race finisher is a car that completes half the distance of the overall winner of the race. If the race is an uneven number of laps, divide the winner's laps in half and round down to the nearest whole integer. A car has 5 minutes after the checkered flag to complete its current lap.

B. A car may complete a lap by being driven across the control line in the pit lane only using on-board power (such as the starter motor), but it may not be pushed across the line by its crew or any officials.

6.10.4. Race Winner

The race winner is the car that completes the race distance in the least time, or the greatest distance in the timed length of the competition. If

the race is shortened, the leader of the last completely scored lap is the winner, provided the race is completed.

A. Checkered Flag

The checkered flag is displayed at the finish line first to the winner as he completes the race distance or after he completes the prescribed time, and then to the other finishers as they cross the finish line.

B. Checker to Wrong Car

If the checkered flag is displayed first to the wrong car, it shall be continuously waved until seen by the entire field. The race finishing order will be determined by the last completely scored lap.

C. Late Checker

If the checkered flag is not displayed at the scheduled end of the race and the race is one or more laps longer than scheduled, the race is scored as if it had ended at the scheduled length. As soon as the Starter is aware that the checkered flag has not been displayed at the scheduled end of the race, he may show the checkered flag immediately, if both Timing and Scoring and the Operating Steward concur.

D. Winning Car Not Running in Timed Race

If the winning car is not running at the expiration of the timed length, the checkered flag will be displayed to the highest placing car still running. The winner in a timed race is not required to take the checkered flag.

E. Dead Heats

Competitors in a dead heat share the prizes allotted to their finishing positions.

6.10.5 Shortened Races

A. If a race is stopped at less than 50 percent of its scheduled time or distance and is not restarted, it is incomplete; championship points shall not be awarded, and organizers will not be required to distribute trophies or other awards.

B. A race that is stopped at 50 percent or more of its scheduled time or distance, and not restarted, is complete, and results will reflect the order of the end of the last completely scored lap (even if that lap is less than 50 percent of the scheduled distance).

6.10.6. Lap Record

Official lap records are set during races; not practice or qualifying. A driver whose car is *penalized* for non-compliance *in a race* may not set a lap record *in that race*.

6.11. RULES OF THE ROAD

6.11.1 On Course Driver Conduct

A. Drivers are responsible to avoid physical contact between cars on the race track.

B. Each competitor has a right to racing room, which is generally defined as sufficient space on the marked racing surface that under racing conditions, a driver can maintain control of his car in close quarters.

C. Drivers must respect the right of other competitors to racing room. Abrupt changes in direction that impede or affect the path of another car attempting to overtake or pass may be interpreted as an effort to deprive a fellow competitor of the right to racing room.

D. The overtaking driver is responsible for the decision to pass another car and to accomplish it safely. The overtaken driver is responsible

to be aware that he is being passed and not to impede or block the overtaking car. A driver who does not use his rear view mirror or who appears to be blocking another car attempting to pass may be black flagged and/or penalized, as specified in Section 7.

6.11.2. Hand Signals

A. A driver should signal his intention to enter the pits from the course by raising his arm.

B. An overtaken driver should point to the side on which an overtaking driver should pass.

C. The driver of a stalled car should raise both arms to indicate that he will not move until the course is clear.

6.11.3. Off-Course Excursions

Drivers are required to follow the pavement or marked course, and may not gain an advantage from an off-course excursion. Unless the Supplemental Regulations specify otherwise, a driver who leaves an artificially marked course or an airport circuit with all four wheels must reenter the course at the same location where he went off, subject to the directions of officials controlling reentry.

6.11.4. Counter-Race Direction Driving

Specific approval of the Chief Steward is required to drive a car in counter-race direction at any time or under any condition during an event. Violating this rule may result in penalties as specified in Section 7.

6.11.5. Stopping on a Course; Accepting Assistance

A. A driver who stops his car on course must make every effort to assure that the location does not pose a danger or obstruction to other competitors.

B. During a race, a driver may receive assistance only in the pit lane by his pit crew, except for safety assistance from race officials.

C. For assistance during restarts, see 6.8.

6.11.6. Using the Engine Self-Starter on Course

While on the course, a car may not be moved using the starting device, except to relocate to a position of greater safety or under provisions of 6.10.3.B.

6.11.7. Passengers

No one may ride outside the cockpit area or on the coach work of any automobile at any time, including victory laps.

7. PENALTIES

All Club Racing participants are subject to control by SCCA, the GCR, and the Supplemental Regulations. This Section specifies the penalties for violating the GCR and the Supplemental Regulations.

7.1. WHO MAY BE PENALIZED

Any entrant, driver, crew member, organizer, official, or SCCA member may be penalized.

7.2. RANGE OF PENALTIES

In increasing order of severity, the range of penalties is as follows:

A. Fine ($1-$99)

B. Reprimand

NOTE: A reprimand against an SCCA member shall be noted in his license file.

C. Fine ($100-$249)

D. Loss of event points

E. Fine ($250)

NOTE: All fines must be in whole dollar amounts only.

F. Loss of Time, Lap, or Finishing Position

G. Probation of competition privileges

Although the probation is effective immediately, the probation period does not begin until the license, as well as any imposed fine, is received by the Chairman SOM or the National Office. Any member on probation must notify the event Chief Steward prior to his first on track session or beginning his assigned official's responsibilities. Failure to notify the Chief Steward is a violation of probation.

1. Length of Probation

Probation may be up to 12 months; or it may be specified as a number of SCCA Club Racing event days or SCCA Club Racing event sanctions.

2. Term(s) of Probation

A driver on probation may be restricted to competing in his Division; limited to competing in certain types of levels of events; or required to perform specified event related activities, including attending an SCCA Drivers' School. Participating in SCCA Practice Days or SCCA events that are not sanctioned by SCCA Club Racing will not fulfill probation.

3. Violation of Probation

Failing to comply with the probation terms may result in further penalties assigned by a review committee appointed to hear the violation, by Driver or Official Review, or by the SOM at the event where the violation occurs.

H. Disqualification

An entrant, driver, or car may be disqualified from an event. Rights to awards in the competition are automatically forfeited.

I. Suspension of license privileges

SCCA license privileges for a driver, crew, or official may be suspended for a period of time not to exceed 12 months. A license holder whose privileges are suspended must immediately surrender his license to the Chairman of the SOM, review committee, or Court of Appeals. While the suspension is effective immediately, the suspension period does not begin until the license, as well as any imposed fine, is received by the Chairman of the SOM, review committee, or the National Office.

A member whose Competition License has been suspended shall not participate in a Club Racing event using any other grade or form of competition license. When the suspension is the result of a non-compliant vehicle, the infraction shall be noted in the Vehicle Logbook.

The suspension document for a Competition License holder will note whether a member whose license privileges have been suspended may participate in further Club Racing events in another capacity using another type or grade of license.

J. Loss of accrued points

A competitor may be penalized all points accrued during the current season.

K. Expulsion from SCCA

A member may be expelled from the SCCA as provided in the SCCA Bylaws.

7.3. MULTIPLE PENALTIES

Multiple penalties may be imposed. In addition, penalties may be consecutive (for example, 2 month suspension followed by 6 month probation). Both suspension and probation, each for the maximum allowable term, may be imposed for a single violation.

7.4. AUTOMATIC PENALTIES

A. Penalties assessed by the SOM or the Court of Appeals accumulate points according to the following schedule:

1.	Fine ($1 - $99)	no points
2.	Reprimand	1 point
3.	Fine ($100 - $249)	1 point
4.	Loss of event points	1 point
5.	Fine ($250)	2 points
6.	Loss of time, lap, or finishing position	2 points
7.	Probation of SCCA competition privileges	3 points
8.	Disqualification	4 points
9.	Suspension of SCCA competition privileges	6 points
10.	Loss of accrued championship or series points	7 points

B. Penalties imposed by the Chief Steward do not incur automatic penalty points. If a Chief Steward's action is protested and the protest is disallowed (upholding the Chief Steward's action), the SOM may, at their discretion, assign penalty points as listed above.

C. When multiple penalties result from a single action, only the most severe penalty accrues points.

D. Automatic penalties are imposed according to the following schedule:

Condition	Automatic Penalty
11-14 points accumulated in consecutive 3 year period	Probation for 6 months or 6 events determined by Divisional Executive Steward
15 or more accumulated in consecutive 3 year period	Suspension of competition privileges for 6 months
Invalid Statement of Facts Affidavit	Event disqualification, 60 day suspension of competition privileges, and 6 penalty points
Refusing to allow teardown in Mechanical Protest,Request for Action, or Chief Steward's Action	Event disqualification, 6 month suspension of competition privileges, $250 fine, and 6 penalty points
Non-Compliance in the following classes: Formula Enterprise Spec Racer Ford Enterprises Sports Racer	FE: see 9.1.1.A.5.19. SRF: see 9.1.9.C.20 ESR: see 9.1.9.F.19

NOTES:

-Penalties caused by accumulated penalty points do not themselves result in further points.

-Penalty points expire 3 calendar years from the date they were incurred.

7.5. AMENDMENT OF RESULTS

Whenever a penalty affects the final results, including when a driver or car is disqualified, the SOM *shall* advance the subsequent competitors in the finishing order and advise the Chief of Timing and Scoring of any amendment to the results.

7.6. PUBLICATION

SCCA has the right to publish that any individual or organization has been penalized, the penalty, and the reasons. An individual or organization included in the notice of penalty has no right to act against the SCCA or against any other individual for publishing the notice or for its contents.

Notes:

8. STEWARDS' ACTIONS, PROTESTS, AND APPEALS

8.1. TYPES OF JUDICIAL ACTIONS

8.1.1. Chief Steward's Action

The Chief Steward may file a Chief Steward's Action (CSA) with the SOM to describe a participant's breach of the GCR or the Supplemental Regulations and the action taken according to 5.12.2. All CSAs must be filed with the SOM within 30 minutes after the results of the final race of the event are posted, although the SOM may approve an extension of time.

8.1.2. Request for Action

The Chief Steward may submit to the SOM a Request for Action (RFA) describing a suspected breach of the GCR or the Supplemental Regulations, asking the SOM to investigate and determine whether there was a breach, and what, if any, penalties to impose. The Chief Steward cannot submit an RFA for any single violation of the rules for which he has already imposed a penalty allowed in 5.12.2. An RFA resulting from a post-race impound inspection may be submitted within a reasonable time following the discovery of the suspected breach. All other RFAs must be submitted to the SOM within 30 minutes after the results of the final race of the event are posted, although the SOM may approve an extension of time.

8.1.3. Chief Steward's Action Against a Car

The Chief Steward may initiate an action against a car for non-compliance using a CSA or RFA. The procedures are the same as when one competitor protests the compliance of another's car (see 8.3.3.), except that the organizer replaces the protestor regarding expenses and the Chief Steward replaces the Chairman.

8.1.4. Compliance Review

A member may request a determination on the compliance of his vehicle or its components through the Club Racing Department.

A. Upon receiving a request, the Chairman of the Stewards' Program will convene a review committee. The committee will consult with the Club Racing Board for expert technical testimony prior to determining the compliance of the item(s) in question. The review committee will convey their decision to the member, and notify the Chairman of the Stewards' Program, who will then forward the decision to the appropriate parties.

B. The Court of Appeals will consider the request and the committee's decision. The member may submit additional evidence to the CoA after receiving the review committee's decision.

   In its review, the CoA will consult with the Club Racing board for expert technical testimony prior to determining the compliance of the item(s) in question. The CoA will render their decision to the member, and the Chairman of the Stewards' Program.

C. Penalties or penalty points will not be assessed in the event of a negative ruling.

D. A non-compliant ruling will be published; a compliant ruling will not be published. Court of Appeals decisions on technical compliance are effective for the calendar year during which they are rendered, and are superseded by the following year's edition of the GCR.

E. The fee for this service is $300. A portion of the fee may be refunded at the discretion of the Court of Appeals.

8.1.5. Protests

Any entrant, driver, crew, organizer, or official participating in an event may protest any decision, act, or omission of another entrant, driver, crew, organizer, official, or any other person connected with that event whose actions the protestor believes to be in error or which violate the GCR, the Supplemental Regulations, or any condition involving SCCA's sanction of the event.

8.2. HEARINGS AND JUDGEMENTS

The SOM procedures for RFAs and Protests are the same.

All RFAs and Protests will be heard by the SOM as soon as practical. The parties concerned will be notified when and where the hearing will occur. This may include 3rd parties who were not immediately identified as being involved in the incident(s) in question. Although all parties have the right to call witnesses, they must state their cases in person. Each party or witness must be heard separately and privately.

Unless they are specifically released by the Chairman SOM, all parties must remain at the event until a ruling has been issued. If any party is absent, a judgment may still be rendered, and may by default go against him.

If the SOM are unable to rule immediately after the hearing, all parties will be notified when and how the decision will be conveyed.

All parties shall be bound by the decision, subject only to appeal, as specified in 8.4.

For the purpose of this section, the term "party" means anyone who has protested or been protested, or who is the subject of a Chief Steward's Request for Action, in addition to anyone found to have been involved with and possibly responsible for the incident(s) in question.

8.3. PROTEST PROCEDURES

8.3.1. How to Protest

The following are requirements to protest. A Protest must:

A. be in writing;

B. must specify the sections of the GCR or Supplemental Regulations that are alleged to have been violated;

C. be signed by the protestor;

D. be accompanied by a fee of $50, if at a National race; $25 if at a Regional race or Drivers' School. These fees may be returned to the protestor at the discretion of the SOM.

E. be delivered, with fee, to the Chief Steward or to an Assistant Chief Steward delegated to receive Protests, who will promptly convey it to the Chairman of the SOM.

F. be filed within the time limits specified below, although the SOM may extend the time in cases where the protestor can show that evidence relating to the Protest was not available within the time limit, or where the protestor can show that he was unable to meet the deadline because of circumstances beyond his control.

Protest Type	Time Limit
Validity of an entry Rules compliance of an entrant, driver, or car	No later than one hour before the start of the race session of the competition for the issue in question.
Starting (Grid) position	Within 30 minutes after the grid is posted.
Driver's on track behavior	Within 30 minutes after the end of the session
Race results	Within 30 minutes after results are posted.
Race officials's action or decision	Within 30 minutes after the end of the session OR within 30 minutes of receiving the notification of the official's action.

8.3.2. Reasonable Protests
Properly presented Protests must be reasonable, logical, and based on sound evidence. Reasonable people may differ and a properly presented Protest may not be upheld.

A. The protest fee will be forfeited if the Protest is not well-founded.

B. A protestor whose actions are in bad faith or vexatious may be penalized by the SOM as specified in Section 7.

8.3.3. Actions Against Cars
An entrant or driver may initiate an action against a car *in his race group* for non-compliance using a Protest. Any participant may protest the fuel used in any car in a competition as specified in 9.3.26. A Protest against a car is also a Protest against its driver and entrant.

The protestor may request that the car be disassembled, inspected, or any other test made, provided he posts a tear down bond (also referred to as "bond") with the SOM sufficient to cover the total expenses of disassembly, inspection, reassembly, and other costs associated with the protest. A Protest may be reduced in scope but not added to at the time the bond is set. Unless the protestor wholly or partially withdraws his Protest, the stipulated inspections will be completed after the bond is set and received.

A claim that non-compliant item(s) offer no performance advantage has no influence on any ruling.

Non-compliant item(s) will be noted in the car's Vehicle Log Book. (See 9.2.1.I.)

A. Setting a Bond

1. The SOM will establish a bond after consulting separately with the protestor and the protested party(ies), with the Chief Technical Inspector, and any others whose advice the SOM believe to be useful.

2. A cost schedule must be established before the inspection can begin. Items covered by the bond may be priced individually, giving consideration to logically linking some items. Or else the bond may be allocated on the basis of an agreed-upon apportionment. Bond apportioning after the fact is not permitted, except where the protestor has withdrawn all or part of the Protest. If the protestor does withdraw all or part of his Protest, the SOM will apportion the costs incurred, including reassembly, up to the point of withdrawal, provided no non-compliance has been discovered.

3. The bond must be paid before the inspection can begin, and must be cash, check, or credit card (Visa, Mastercard, or

Discover only).

4. If circumstances warrant, the SOM will require the protested party to post bond and/or sign a repair order with a service establishment to cover the costs of disassembly and inspection. The bond shall be determined in the same manner as a protestor's bond.

5. The SCCA Technical Services Department offers verification services for protest and/or compliance resolution of components and/or assemblies with the following requirements:

   a. A complete description of the vehicle/engine combination (specifically - make, model, year, VIN #, engine code, displacement, and so on).

   b. A known stock example of the part in question must be shipped with the protested part. The sample must be the same make, model and year of the protested part.

   c. The cost for each inspection will be set according to the Club Racing Labor Rate Guide, published on the SCCA web site. Provisions for shipping to and from the National Office must also be included in the bond.

   d. A complete comparison will be produced within 5 working days of receiving the protested assembly and the stock sample, along with all the required information. The outcome will be conveyed to the Chairman SOM via email.

B. Conducting an Inspection

The SOM will oversee the inspection and/or disassembly. They determine which, if any, portions of the inspection and/or disassembly may be observed, and by whom.

Non-compliant items found during inspection and/or disassembly that were not part of the original Protest must be referred to the Chief Steward. If additional non-compliant items are found and referred, the protested party will receive no portion of the protestor's bond, regardless of the compliance of the protested component(s).

C. Refusing to Allow Inspection

A driver or entrant of a protested car who refuses to allow inspection is subject to immediate automatic penalty as specified in 7.4.D.4.

D. Bond Disposition

If the car is found compliant, the protestor forfeits the bond. If the car is found non-compliant, the protestor's bond is returned, and the protested driver or entrant pays the expenses. 8.3.3.A.2. specifies the conditions for apportioning the bond.

E. Time of Disbursement of Bond; Appeal Escrow

The tear down bond shall be sent to the Club Racing Department to hold it in escrow until the time limit to Appeal expires, an Appeal has been rejected, or an Appeal has been decided by the Court of Appeals.

F. Preserving Evidence

All recorded evidence such as technical data, inspectors' reports, or measurements must be forwarded to the Club Office along with the bond. The Chairman SOM must assure that the chain of evidence is not broken by receiving and holding any parts surrendered by their owner for safekeeping pending appeal. The Chairman SOM has the authority to impound parts.

All impounded parts must be uniquely and identifiably marked when they are removed from the car. The parts must remain under the direct control of a licensed Tech Inspector or Steward until they are returned to the competitor or delivered into the direct control of a courier service for insured and traced shipping to the National Office for inspection, after which the parts will either be retained or returned to the competitor.

8.4. APPEALS

8.4.1. Right to Appeal

Any participant or organization named as a party to a protest or Chief Steward's RFA, has the right to appeal a decision or penalty imposed upon him or it by the SOM. The Chief Steward of an event has the right to appeal any decision or penalty imposed.

8.4.2. Appointment and Jurisdiction

Each year, the Board of Directors, SCCA, Inc., will appoint a 3 member Court of Appeals (Court), consisting of 3 regular members and one or more alternates, to review any Appeal filed under this section and make a final decision. The purpose of the Court is to provide a mechanism to resolve differences by a committee composed of members with individual and collective expertise in racing matters.

8.4.3. Appeal Procedures

A. How to Appeal

The following are requirements to appeal. An Appeal:

1. must be in writing;
2. must specify who is appealing; what decision is being appealed; the sections of the GCR and/or Supplemental Regulations which are believed to have been administered inappropriately, unfairly, or inequitably; all information the appellant wishes the Court to consider; and the arguments in favor of the Appeal;
3. must be received by the National Office US Government postmarked or registered with a carrier service such as UPS or Federal Express or by Express Mail, fax or email within 10 days after the decision of the SOM or review committee has been delivered to the appellant;
4. must be accompanied by a fee of $175, payable to SCCA, Inc. A minimum of $100 of any appeal fee will be retained by the SCCA, unless the Court directs otherwise. Faxed or emailed Appeals must include a Visa or MasterCard account number for payment of the fee. Insufficient funds checks or credit card transactions that are rejected will be grounds for suspension of competition privileges. Any additional fees charged by the financial institution(s) will be assessed to the appellant.
5. may be withdrawn by the appellant, by writing the National Office before a decision is reached. The administrative portion of the appeal fee may be retained at the discretion of the Court of Appeals.

B. Fines, Licenses, Financial Obligations

Before an Appeal will be heard, all applicable following conditions must be met:

1. all fines must be received by the National Office;
2. a competition license surrendered to the Chairman of the SOM or the Chief Steward in return for a Probation Letter must be received by the National Office; and

3. any other financial obligation to the SCCA, Inc., or to any Region as reported to SCCA by the Region, must be received by the National Office.

All fines must be paid in cash or by check.

C. Stay of Decision

An Appeal filed on a penalty of suspension of competition privileges or expulsion from the SCCA imposed by the SOM or other review permits the appellant to participate in subsequent races, until his Appeal has been decided and the decision announced by the Court. The results and awards from these races are Provisional until the Court's ruling upholds or overturns the suspension or expulsion, at which time the results and awards will be Final and Official. If the Court upholds the suspension or expulsion, the appellant's awards from races run while awaiting the Court's decision will be null and void. Race results for those events will be revised to expunge the appellant's information from the Final and Official Results.

D. Multiple Sanction Weekends

On a multiple event weekend, (i.e., where more than one Club Racing sanction number has been issued, in any permitted combination of events), an individual whose competition privileges are suspended as specified in 7.2.I. may file a Notice of Intent to Appeal, accompanied by the appeal fee, with the Chairman of the SOM, and be allowed to participate in an event that weekend whose sanction number is different than the one under which he was suspended. The Appeal shall be filed within ten days of the date the decision of the SOM was given to the appellant. THIS APPEAL CANNOT BE WITHDRAWN. The appellant may participate in subsequent events until the Court conveys its ruling.

If an individual's competition privileges are suspended by the SOM during a single sanction weekend, he is prohibited from further competition activities during that event from the time he receives their decision. At a single sanction weekend, the SOM may not accept A Notice of Intent to Appeal for any reason at any time.

E. Reasonable Appeals

Properly presented Appeals must be reasonable, logical, and based on sound evidence. Reasonable people may differ on the interpretation of the evidence. An Appeal may be properly presented even if the decision of the SOM or review committee remains unchanged or is overturned by the Court.

8.4.4. Hearing Appeals

All properly filed Appeals will be heard by the Court. The Court will review the SCCA Official Observer's Report, the Notice of Appeal, containing all the evidence the appellant wishes the Court to consider, and will make appropriate inquiries before coming to a decision. It may require the appellant to submit additional evidence necessary for it to reach an equitable decision; hear directly evidence from any person it believes has pertinent information or necessary data; permit other parties to the issue under appeal to make written comments on the Notice of Appeal; and/or seek information from any other source. The Court shall make every effort to come to a conclusion and convey a final written decision on each Appeal within 30 days of receiving the Notice of Appeal.

No member of the Court may consider the Appeal if he has participated in the event under review as a competitor or official, or if he is directly or indirectly interested or involved with the matters under consideration.

The Court shall determine the procedures for hearing appeals, and these

procedures are not subject to appeal.

8.4.5. Judgment of the Court of Appeals

A. After considering all relevant material, the Court shall meet privately, reach a conclusion, and prepare a written decision. Actions of the Court may include, but are not limited to, the following:

1. The penalty or other action should be nullified, mitigated, affirmed, increased, or a different penalty imposed.

2. The Court may order a rehearing by the original SOM.

B. The Court may not order a competition to be re-run.

C. At no time shall the Court of Appeals act as a Chief Steward, SOM, or Review Committee.

D. Penalties imposed by the Court incur automatic penalty points as specified in 7.4.

E. The Court may or may not return appeal fees; and it will determine the disposition of protest fees and tear down bonds, if any, in cases where the decision being appealed is nullified or otherwise changed.

F. The Court's decision is final, binding and not subject to further appeals by any party, either inside or outside the SCCA.

8.4.6. Publication and Effect of Decision

The National Office will distribute a copy of the Court's decision to all parties of the Appeal as soon as possible after the decision becomes final and will use its best efforts to publish the final decision as soon as possible. Individuals or organizations referred to in any decision have no right of action against SCCA, or any person publishing the decision, and the decision shall be final and binding. Any penalty imposed by the Court is effective immediately, or as stated in the Court's decision. Penalties involving time, disqualification, or loss of points apply to the event involved, but are effective as of the date of the conclusion of that event. The Court will determine the effective date for a suspension, whether it is affirmed or imposed.

8.4.7. Bad Faith Appeals

An appellant whose actions are in bad faith or vexatious may be penalized by the Court as specified in Section 7.

8.4.8. Appeals Affecting Final Points Standings

For all National Races held less than 28 days before the beginning of the Runoffs, any Appeal affecting the National Championship points standings in a Division, including all evidence, must be received in the National Office within 48 hours after either the receipt of a judgment issued by the SOM or the completion of the event, whichever occurs later. Runoffs invitations to all parties named in or affected by the Appeal will be held until the Appeal has been finalized. An "intent to appeal" will not be accepted. This section supersedes any other time allowances for filing an Appeal.

Notes:

9. CARS AND EQUIPMENT

9.1. CATEGORIES AND CLASSES

All cars competing in SCCA sanctioned races must comply with the requirements of the GCR.

There are 3 types of SCCA classes.

A. National Classes

1. National classes are those listed below which are not designated "Regional Only".
2. All events defined in 3.1.1, 3.1.2, 3.1.3, 3.1.5 and 3.1.7 must include all National classes.
3. Only National classes will be invited to the Runoffs, as specified in 3.9.2.E.

B. Regional Classes

1. Regional classes are identified in the list below.
2. All events defined in 3.1.5 and 3.1.7 will, in addition to all National classes, include the Regional Classes.

C. Optional Regional Classes

1. Organizers may develop classes of cars to accommodate local demand and interest, provided the preparation rules meet the General Technical Specifications and are reviewed annually and approved by the Club Racing Department before the first event of the calendar year in which the local class(es) will compete. It is the organizer's option to Include these classes in events defined in 3.1.5, 3.1.6 and 3.1.7.
2. In addition, organizers may include either or both of the following Optional Regional Classes in their events defined in 3.1.5, 3.1.6 and 3.1.7.
   a. Super Production Class (SP) (Optional Regional Class): Cars which exceed the preparation limitations of the applicable Production or GT Category Rules but which meet the General Technical Specifications of Section 9 of the GCR for GT category cars. This includes cars not listed in the GT or Production specification pages, such as FIA homologated production cars.
   b. Legend Cars (LC) (Optional Regional Class): Cars that are manufactured by 600 Racing and that comply with current Legend Car Rules, published by 600 Racing. An LC competitor must have the current LC Rules at all events. LC should grouped with cars of similar weight, configuration, and speed potential. Note: Legend Cars are not eligible for any other Club Racing category. Modifications not permitted in the current LC rules render the car ineligible for SCCA Club Racing competition. Legend Cars may run with any DOT 205/60/13 tires.

The abbreviations in parentheses are the class identifications as required in 9.3.29.A.

9.1.1. FORMULA CATEGORY CLASSES

Formula Atlantic (FA)

Formula 1000	(FB)	
Formula Continental	(FC)	
Formula Enterprises	(FE)	
Formula Vee	(FV)	
Formula F	(FF)	
Formula 500	(F5)	
Formula Mazda	(FM)	
Formula S	(FS)	Regional Class
Formula First	(FST)	Regional Class

9.1.1 continues in the Formula Category Rules.

9.1.2. GRAND TOURING CATEGORY CLASSES

GT-1	(GT1)
GT-2	(GT2)
GT-3	(GT3)
GT-Lite	(GTL)

9.1.2 continues in the GT Category Rules.

9.1.3. IMPROVED TOURING CATEGORY CLASSES (REGIONAL CLASSES)

R	(ITR)
S	(ITS)
A	(ITA)
B	(ITB)
C	(ITC)

9.1.3 continues in the Improved Touring Category Rules.

9.1.4. SUPER TOURING CATEGORY CLASSES

STO	(STO)	
STU	(STU)	
STL	*(STU)*	*Regional Class*

9.1.4 continues in the Super Touring Category Rules.

9.1.5. PRODUCTION CATEGORY CLASSES

E Production	(EP)
F Production	(FP)
H Production	(HP)

9.1.5 continues in the Production Category Rules.

9.1.6. SEDAN CATEGORY

American Sedan	(AS)

9.1.6 continues in the American Sedan Category Rules.

9.1.7. SHOWROOM STOCK CATEGORY CLASSES

B (SSB)

C (SSC)

9.1.7 continues in the Showroom Stock Category Rules.

9.1.8. SPEC MIATA CLASS

Spec Miata (SM)

9.1.8 continues in the Spec Miata Class Rules.

9.1.9. SPORTS RACING CATEGORY CLASSES

A Sports Racing (ASR) Regional Class

C Sports Racing (CSR)

D Sports Racing (DSR)

Sports 2000 (S2)

Spec Racer Ford (SRF)

9.1.9 continues in the Sports Racing Category Rules.

9.1.10. TOURING CATEGORY CLASSES:

Touring 1 (T1)

Touring 2 (T2)

Touring 3 (T3)

9.1.10 continues in the Touring Category Rules.

9.1.11. SPEC MX-5 CLASS

Spec MX-5 (SM5) Regional Class

9.1.11 continues in the Spec MX-5 Class Rules.

9.1.12. **CARS RUN IN THE PROPER CLASS**

A. All cars shall race in their respective classes.

B. Cars should not be run in classes and/or categories for which they were not designed or intended. The Chief Steward must approve the proposed classification. He will not approve if the car is so dissimilar or the car/driver combination otherwise unsuitable that it is a hazard or impediment to fair competition among the other cars in the class and race group.

9.1.13. **NATIONAL CLASS PARTICIPATION REQUIREMENTS**

A. A class retains its National status as long as its annual average number of entries achieves 2.5 or higher per National event.

B. Should that annual average number of entries fall below 2.5, the class will have one additional year to bring the participation level above the current requirement. Alternatively, it may be immediately consolidated into an existing class. If the class does not exceed the current average requirement during the grace year, it will either be consolidated into existing classes or become a Regional Class.

C. Based on member input, a Regional Class (except Improved Touring) meeting or exceeding the participation requirements outlined in paragraph 9.1.12.A. for 1 year may be reviewed to become a National Class.

D. Based on member or manufacturer input, the CRB may recommend creating new National classes for BoD approval. National classes

created under this section have 5 years to achieve an average of 2.5 cars per National event before being consolidated or redefined as a Regional Class, according to 9.1.12.B.

Note 1: For the purposes of this section, the term "entries" is defined as drivers classified in the final official race results of National races as finishers, did-not-finish (DNF), did-not-start (DNS), or disqualified (DQ).
Note 2: *For the purposes of this section, STO, STU, FE and Formula 1000 shall be considered new classes from 2007.*
Note 3: Classes such as Improved Touring, Super Production, A Sports Racing, and Formula S (Regional and Optional Regional Classes) have been developed for competitors to race at a Regional level. These classes will not be eligible for National races since they were created with the express understanding that they remain Regional Classes only. There may be other classes added to this philosophy, as we identify classes for our members to race cars that do not fit within our National racing program.

9.2. VEHICLE DOCUMENTATION

9.2.1 VEHICLE LOGBOOKS

Each car shall have a complete and up-to-date logbook.

A. The standard SCCA Vehicle Logbook will be used by all competitors at all SCCA competitions, unless excepted in the Supplemental Regulations for an event shared with another sanctioning organization, or as specified in 9.2.1.D.

   All unissued Vehicle Logbooks must remain the in possession and control of a Divisional or National Technical Inspector.

B. Only one logbook will be issued for each vehicle (except as a continuation of the original or a replacement). When a continuation logbook is issued, the date the initial logbook was issued must be written on the front page of the continuation logbook. (It is not necessary to present all old logbooks for issuance of annual inspection stamp or a tech sticker.) Possessing two logbooks for one vehicle is a breach of the rules under 2.1.3.

C. A complete description of the vehicle, its safety roll bar/roll cage, and the required photographs must be present in the places provided. All changes of ownership of the vehicle must be recorded.

D. ASN Canada FIA Vehicle History Logbooks will be accepted at all SCCA events.

E. The Vehicle Logbook must be issued by a Nationally licensed Technical Inspector, who will complete the required vehicle information in the front and back of the logbook. He will conduct a thorough inspection of the vehicle, as provided in Section 9.3, General Technical and Safety Specifications. The logbook issue date is the date of registration.

F. Identity Numbers:

   1. Each vehicle shall be issued an identity number which will be permanently stamped on its roll bar, and which will correspond to the number on the Vehicle Logbook.

   2. The first digit(s) corresponding to the region's identity number will be separated from the balance of the numbers by a dash (-).

   3. The car numbering system, beginning with 001, shall be issued

consecutively as the vehicles are registered during a thorough inspection.

G. All Formula and Sports Racing Cars registered after January 1, 1983 are required to be Homologated by SCCA and issued a Certificate of Approval. Exceptions are Spec Racer Ford, FE, SRSCCA, and Shelby Can-Am. The original certificate shall be presented along with the car for issuance of a new Vehicle Logbook. Additionally, former Spec Racer Renaults may compete in Vintage/Historic events using their originally issued logbook.

H. At each event, this Logbook and the Certificate of Approval (for cars required by these rules to have one) must be presented at Technical Inspection with the signature of the driver/entrant for that event in the space provided. During Technical Inspection, any deviations in compliance shall be noted in the logbook by the Technical Inspector. If the Chief Steward allows a waiver for the event, the duration of the waiver must be noted and the competitor is obligated to comply with the duration.

I. If a car is protested or inspected during an event and found to be non-compliant, the results of this protest or inspection must be noted in the logbook by the Chairman SOM, or another delegated official, such as the Chief Technical Inspector. (See 8.3.3.)

J. If a car is involved in an accident or is damaged as a result of mechanical failure, the damage must be noted in the Vehicle Logbook by the accident investigator or Chief Technical Inspector.

K. Cars found to be underweight at impound are subject to penalty and the weight shall be noted on the next page of the Vehicle Logbook.

L. If the logbook is not available at Technical Inspection, the car may compete only after a thorough inspection of the car is completed, during which all details required to issue a logbook are recorded.

M. A car may be entered in multiple classes within a single sanction numbered event. A single Vehicle Logbook is required, but it must contain pictures of each configuration.

9.2.2. HOMOLOGATION REQUIREMENTS

Homologation is required for all Formula and Sports Racing cars registered after January 1, 1983. All Formula and Sports Racing cars shall be homologated for their class. All Formula and Sports Racing cars applying for a re-homologation, conversion, dual homologation or a new homologation in a different class must comply with the current rules.

Homologation is required on all Legend Cars, and therefore they shall also comply with the SCCA Legend Car Homologation Request sheet.

Homologation forms must be on file with the National Office for a car to be allowed to compete in any SCCA event.

With the approval of the CRB Chairman, the SCCA Club Racing Technical Manager may deny homologation of any car determined to be configured unsafely, to incorporate design characteristics or conditions that are fundamentally divergent from standard safety consideration, or to be incompatible with the relevant class structure.

Modifications that stay within the scope of the rules may be made to a vehicle after it has been homologated.

9.3. GENERAL TECHNICAL AND SAFETY SPECIFICATIONS

The points covered at Technical and Safety Inspection shall be:

9.3.1. ACCUMULATORS (e.g., Accusumps)

An accumulator (e.g., Accusump) may be installed (except for Spec Miata, and Showroom Stock). Location is free, but it shall be securely mounted within the bodywork. All oil lines that pass into or through the driver/passenger compartment shall be of metal braided hose (e.g., Aeroquip).

9.3.2. ACTIVE SUSPENSIONS AND TRACTION CONTROL SYSTEMS

Active suspensions and traction control systems, as installed by the automobile manufacturer and unmodified, are allowed only in Touring, Showroom Stock, and STO.

9.3.3. ADVERTISEMENTS AND GRAPHICS

Advertising and graphics (names, symbols and logos) may be displayed on cars provided they are in good taste and do not interfere with identification marks and SCCA logos.

9.3.4. AERODYNAMIC SKIRTS

Aerodynamic skirts are prohibited in Club Racing.

9.3.5. ALL-WHEEL DRIVE

Four wheel (All-Wheel) drive is prohibited except in Showroom Stock, Touring, Improved Touring, Super Touring.

9.3.6. APPEARANCE NEAT AND CLEAN, AND SUITABLE FOR COMPETITION

Specifically, cars that are dirty either externally or in the engine or passenger compartments, or that show bodywork damage, structural or surface rust, or that are partially or totally in primer, or that do not bear the prescribed identification marks shall not be approved for competition.

9.3.7. AUTOMATIC TRANSMISSIONS AND HAND CONTROLS

Automatic transmissions are prohibited in all classes. However, the use of alternative transmissions, including automatic transmissions, and/or hand controls may be approved on a case-by-case basis. Such approval shall be in writing from the Club Racing Technical Manager and shall be in the driver's possession at all competitions.

9.3.8. BALLAST

Ballast may be added to all cars as required, to meet minimum weight, provided it is securely mounted within the bodywork and serves no other purpose.

9.3.9. BATTERIES

Battery location is unrestricted within the bodywork (except Showroom Stock, Spec Miata, Touring, and Improved Touring). If located in the driver/passenger compartment, vented wet cell batteries shall be in a nonconductive marine type container or equivalent. The hot terminal shall be insulated on all cars. All batteries (on-board power supplies) shall be attached securely to the frame or chassis structure independent of the marine type container.

9.3.10. BODY PANELS

Body panels shall be securely mounted. Fender skirts and hub caps shall be removed. The hood and engine compartment shall be securely fastened. *Hood fasteners must be removable with simple tools; no fastener requiring a key to open it is permitted.*

9.3.11. BRAKES

Shall be pedal-operated, working directly on each wheel, and in good

working order. Rolling brake tests are prohibited. ABS or Anti-lock braking systems are not allowed except in Showroom Stock and Touring. To satisfy this rule, the ABS shall be disabled by removing or disconnecting all of the wheel sensors.

9.3.12. CAMERA MOUNTS

The mounts for video / photographic cameras shall be of a safe and secure design. The body of the camera or recording unit that weighs more than 8 oz shall be secured at a minimum of 2 points on different sides of the camera body, neither of the attachments may be elastic or plastic. If a tether is used to restrain the camera, the tether length shall be limited so that the camera can not contact the driver. Helmet mounted cameras are prohibited regardless of size, weight, or location of camera on the helmet.

9.3.13. CARBURETOR FUEL INLET FITTING

On all carburetors, (except SU, C and D Sports Racing cars with motorcycle-type carburetors and Formula 500 Mikuni VM38) with a non-threaded fuel inlet fitting, the fitting shall be replaced by drilling and tapping the carburetor body for a threaded fitting.

9.3.14. COOL SUITS

Cool suits are allowed in all classes. Water tank mounts shall be of a safe and secure design.

9.3.15. COOLANT CATCH TANKS

Cooling systems shall be equipped with coolant catch tanks with a minimum capacity of 1 US Pint, except cars that are equipped with working OEM pressurized coolant reservoirs.

9.3.16. CRYOGENIC TREATMENT

Cryogenic treatment of components is allowed unless specifically prohibited in the category or class preparation rules.

9.3.17. DATA COLLECTION DEVICES

Data collection devices are considered to be instrumentation and are therefore allowed in all classes that permit the installation, replacement or addition of gauges, indicators or instruments.

9.3.18. DETACHABLE PANELS/SUNROOFS

Detachable hardtops, detachable panels, and detachable doors (e.g., Lotus 7) shall be removed, unless authorized in the Category Rules or Specification Book for that car to remain in place. All glass panels in the roof must be removed. Movable or removable metal or composite panels in the roof may be either removed or positively secured in the closed position. Any openings in the roof resulting from the removal of a panel must be covered with panels of stock contour made of the same material as the stock surrounding roof structure.

9.3.19. DRIVER'S RESTRAINT SYSTEM

All drivers in SCCA sanctioned speed events shall utilize either a 5, 6, or 7 point restraint harness meeting the following specifications. A 7 point restraint harness is recommended. Arm restraints are required on all open cars including open Targa tops, sunroofs and T-tops. Arm restraints shall not be worn in a manner which limits the ability of the driver to provide visible signals to other competitors while on track. The restraint system installation is subject to approval of the Chief Technical Inspector.

A. A 5 point system, for use in automobiles where the driver is seated in an upright position, consists of:

- *A 2 or 3 inch seat belt.*
- *Two (2) approximately 3 inch shoulder harnesses; 2 inch shoulder harnesses may be used only if a HANS® device or Safety Solutions Head Restraint systems is worn by the driver.*
- An approximately 2 inch anti submarine strap.

A 5 point harness is considered a minimum restraint system. 6 or 7 point systems are highly recommended in all cars including automobiles where the driver is seated in an upright position.

B. A 6 or 7 point system, recommended for use in all automobiles, consists of:

- *A 2 or 3 inch seat belt.*
- *Two (2) approximately 3 inch shoulder harnesses; 2 inch shoulder harnesses may be used only if a HANS® device or Safety Solutions Head Restraint systems is worn by the driver.*
- 2 or 3 approximately 2 inch leg or anti submarine straps.

C. The shoulder harness shall be the over the shoulder type. There shall be a single release common to the seat belt and shoulder harness. When mounting belts and harnesses it is recommended that they be kept as short as reasonably possible to minimize stretch when loaded in an accident.

The shoulder harness shall be mounted behind the driver and supported above a line drawn downward from the shoulder point at an angle of 20 degrees with the horizontal. The seat itself, or anything added only to the seat shall not be considered a suitable guide. Guides must be a part of the roll cage or a part of the car structure.

Only separate shoulder straps are permitted. ("Y" type shoulder straps are not allowed.) "H" type configuration is allowed.

D. The single anti-submarine strap of the 5 point system shall be attached to the floor structure and have a metal to metal connection with the single release common to the seat belt and shoulder harness.

E. The double leg straps of the 6 point or 7 point system may be attached to the floor as above for the 5 point system or be attached to the seat belt so that the driver sits on them, passing them up between his legs and attaching either to the single release common to the seat belt and shoulder harness or attaching to the shoulder harness straps. It is also permissible for the leg straps to be secured at a point common to the seat belt attachment to the structure, passing under the driver and up between his legs to the seat belt release or shoulder harness straps.

All straps shall be free to run through intermediate loops or clamps/buckles.

F. Each seat (lap) and shoulder belt of the harness (5, 6, or 7 points) shall have an individual mounting point (i.e. 2 for seat belt and 2 for shoulder belt minimum). 6 or 7 point system anti-submarine straps may share a mounting point with one or both seat (lap) belt(s). The minimum acceptable bolts used in the mounting of all belts and harnesses is SAE Grade 5*; hardware without grade markings is not acceptable*. Where possible, seat belt, shoulder harness, and anti submarine strap(s) should be mounted to the roll structure or frame

of the car. Where this is not possible, large diameter mounting washers or equivalent should be used to spread the load. Bolting through aluminum floor panels, etc., is not acceptable. *Holes in the roll cage to accommodate the installation of the harness must be bushed and welded completely.*

G. All driver restraint systems shall meet one of the following: SFI specification 16.1, 16.5, or FIA specification 8853/98 or 8854/98.

1. Restraint systems meeting SFI 16.1 or 16.5 shall bear a dated SFI Spec label. The certification indicated by this label shall expire on December 31st of the 2nd year after the date of manufacture as indicated by the label. If for example the manufacture date is 2006 the second year after the date of manufacture is 2008.

2. Restraint systems homologated to FIA specification 8853/98 and 8854/98 will have a label containing the type of harness designation ('C-###.T/98 or D-###.T/98) and date of expiration which is the last day of the year marked. All straps in this FIA restraint system will have these labels.

3. If a restraint system has more than one type of certification label, the label with the latest expiration may be used.

H. Harness Threading: Assemble in accordance with manufacturers instructions. *If no manufacturer instructions are given, use the methods shown in Figures 2-6.*

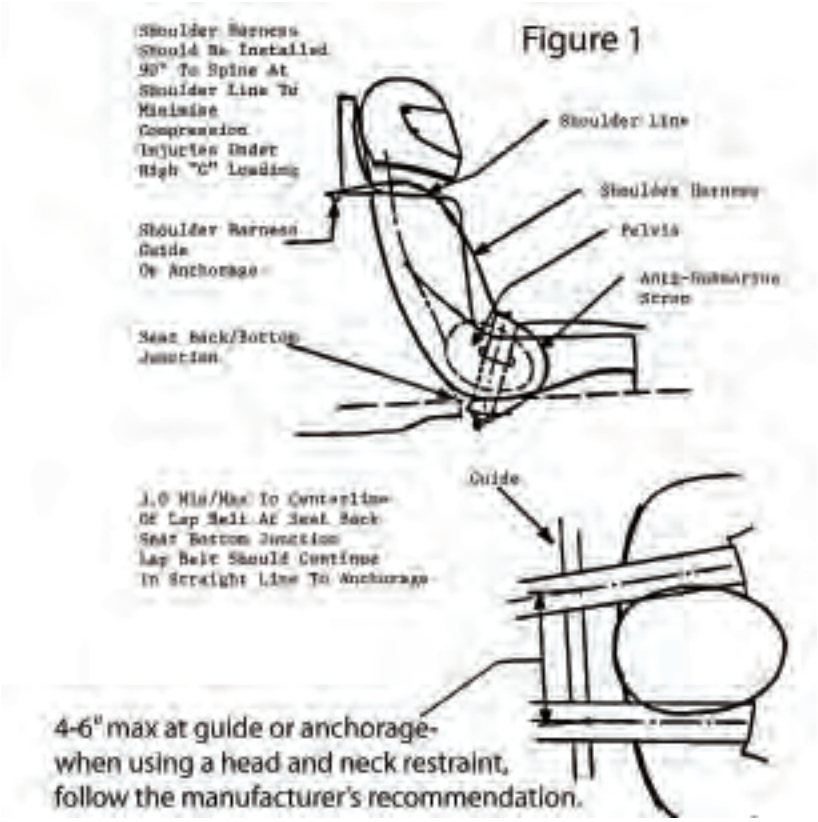
Figure 1
Shoulder Harness Should Be Installed 90° To Spine At Shoulder Line To Minimize Compression Injuries Under High "G" Loading
Shoulder Line
Shoulder Harness
Pelvis
Shoulder Harness Guide Or Anchorage
Anti-Submarine Strap
Seat Back/Bottom Junction
Guide
1.0 Min/Max To Centerline Of Lap Belt At Seat Back Seat Bottom Junction Lap Belt Should Continue In Straight Line To Anchorage
4-6" max at guide or anchorage-
when using a head and neck restraint,
follow the manufacturer's recommendation.

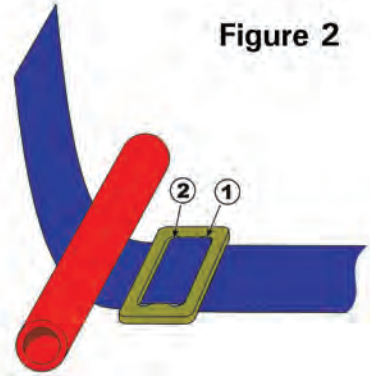
Figure 2
2
1

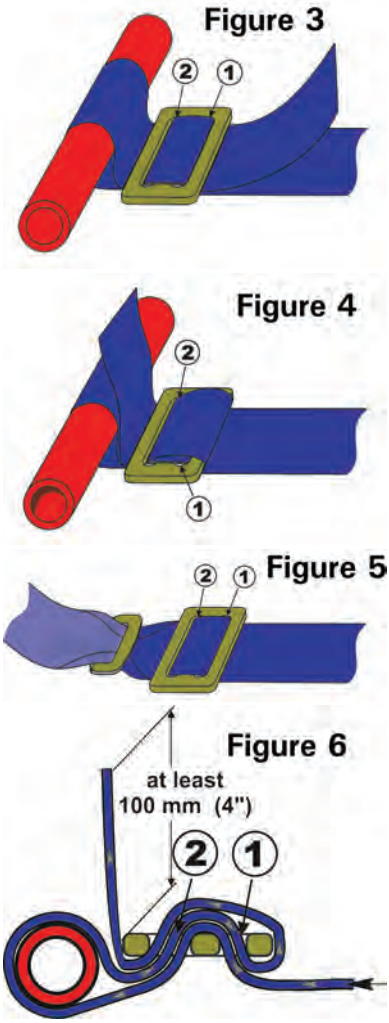

9.3.20. DRIVER'S SAFETY EQUIPMENT

All required driver's safety equipment must be worn at all times while on track. The participant agrees that the participant bears the ultimate responsibility at all times to ensure the safety of participant's driver's safety equipment, and compliance with all SCCA rules, regulations, and agreements, including but not limited to those contained in the GCR.

A. Annual Inspection

At the first event of the calendar year, all driver's safety equipment will be inspected by a licensed scrutineer. The scrutineer performing the inspection shall affix a dated, non-removable sticker or decal on the left side of helmets that comply with Section 9.3.20.C.2., to indicate that all driver's safety equipment has been inspected and is in compliance with this section. This sticker or decal, which shall be placed on the helmet in a manner such that it is visible from outside the car with the

driver seated and belted in the normal driving position, may be checked by grid or scrutineering personnel on the starting grid. The presence of other externally visible driver's safety equipment (gloves, balaclava, and suit) may also be checked by grid or scrutineering personnel on the starting grid.

B. Reinspection

Throughout the racing season, a check of the condition and legality of driver's safety equipment should periodically be done by scrutineers in impound by group or class with the concurrence of the Chief Steward.

C. Required Equipment

The following required equipment shall be in good condition and free of defects, holes, cracks, frays, etc.

1. Driving suits that effectively cover the body from the neck to the ankles and wrists. One piece suits are highly recommended. All suits shall bear an SFI 3.2A/1 or higher certification label or FIA 1986 Standard or FIA Standard or 8856-2000 homologation label. Underwear of fire resistant material shall be used, but is optional with suits carrying an FIA Standard 1986 Standard or FIA Standard 8856-2000 label or SFI 3-2A/5 or higher (e.g., /10, /15, /20) certification label.

2 Crash helmets approved by the Snell Foundation with Snell sticker 2000 or later Special Application (SA2000), or by the SFI with a SFI Sticker 31.1a for open faced helmets and a SFI sticker 31.2a for closed faced (if purchased prior to 12/31/04), SFI 31.1 (if purchased after 1/1/05), or by the FIA standard 8860-2004, or British Standards Institute BS6658-85 type A/FR. The back of each driver's helmet shall be labeled with a minimum of the driver's name. The use of a head and neck support system is highly recommended. **As of 1/1/12, head and neck restraints meeting SFI 38.1 or FIA 8858 will be required.** Accident damaged helmets should be sent by the driver or his or her representative to the Snell Memorial Foundation, 3628 Madison Ave., North Highland, CA. 95660 (ph) 916-331-5073 (attn. Edward B. Becker). Details of the accident should be included. Freon based total loss helmet cooling systems are not allowed.

3. Gloves made of leather and/or accepted fire resistant material containing no holes.

4. Socks made of accepted fire resistant material.

5. Face coverings (balaclavas) of accepted fire resistant material for drivers with beards or mustaches. Hair protruding from beneath a driver's helmet shall be completely covered by fire resistant material. As an alternative to balaclavas, a full helmet skirt of accepted fire resistant material may be used. Double-layer balaclavas are recommended. If balaclavas are used voluntarily, they shall be of accepted fire resistant material.

6. Goggles or face shields, preferably made of new impact resistant materials, for drivers of open cars.

7. A driver's restraint system meeting SCCA standards (See Section 9.3.19.) shall be used at all times while on the track.

8. Shoes, with uppers of leather and/or nonflammable material that at a minimum cover the instep. Ventilation pinholes by the manufacturer are allowed.

9.3.21. ELIGIBILITY
Eligibility for class entered–compliance with the GCR and Specification Books.

9.3.22. EXHAUST SYSTEM
Shall be directed away from the body and shall terminate at or behind a point which is equidistant from the front and rear hubs. *Legends Cars exhaust systems must comply with the official Legends Cars technical specifications.*

9.3.23. FIRE SYSTEM
All cars shall be equipped with an On-Board Fire System except Showroom Stock, Touring, Spec Miata, and Improved Touring.

A. On-Board Fire System Requirements

Cars registered after 1/1/09 shall comply with the following onboard fire system requirements:

- Systems certified to SFI specification 17.1*, or*
- Those listed by the FIA on Technical List No. 16

The following information must be visible of the unit:

- Certification label
- Capacity
- Type of extinguishing agent
- Weight, or volume, of the extinguishing agent

The following is acceptable for cars registered before 1/1/09:
On-board fire systems shall use Halon 1301 or 1211, with a five pound minimum capacity (by weight). Alternatively, on-board fire systems may use AFFF or equivalent surfactant foam material, 2.25 liter minimum capacity (by volume). All AFFF fire system bottles*, except non-pressurized AFFF systems with CO2 propellant,* shall incorporate a functional pressure gauge and shall be marked with the manufacturer's recommended "filled weight." CO2 cartridge propellant fire extinguishing systems are permitted provided that the seal of the manufacturer specified CO2 cartridge is not punctured and the fire bottle is equal to the weight specified by the system manufacturer.

Cars shall meet the following regardless of registration date:

1. The fire system cylinder shall be securely mounted in such a manner that it can be checked during a technical inspection and may be removed for weighing periodically for compliance to full weight shown on the cylinder. (Weight is without valve assembly.)
2. Manual or automatic release is allowed. The release mechanism shall be within reach of the driver when belted in the car.
3. All on-board fire systems shall be identified with a circle "E" decal.
   a. In GT and Production cars, two circle "E" decals may be required–one at the release location and the second on the outside bodywork in line with or as near to the release location as possible.
   b. In Formula and Sports Racing cars, a circle "E" decal shall be located on the outside bodywork as near to the release

location as possible.

On Board Fire System
Item #2607

4. There shall be a minimum of two nozzle locations–one in the driver's compartment and one in either the engine area or the fuel cell area. The nozzles shall be suitable for the type of extinguishing agent used.

5. The firing safety pin(s) shall be removed from all on-board fire systems prior to going on track. It is recommended that a warning tag be attached to the safety pin to remind the driver to remove the safety pin before entering the racing surface.

6. All fire systems shall be serviced according to manufacturer's specifications.

B. Hand-Held Fire Extinguisher Requirements

The following are acceptable for Showroom Stock, Touring, *Spec Miata* and Improved Touring cars:

1. Halon 1301 or 1211, two (2) pound minimum capacity by weight.

2. Dry chemical, two (2) pound minimum with a positive indicator showing charge. Chemical: 10 BC Underwriters Laboratory rating, potassium bicarbonate (Purple K) recommended, 1A10BC Underwriters Laboratory rating multipurpose, ammonium phosphate and barium sulfate or Monnex.

3. The fire extinguisher shall be securely mounted in the cockpit. All mounting brackets shall be metal and of the quick release type.

9.3.24. FIREWALL AND FLOOR

Firewall and floor shall prevent the passage of flame and debris into the driver's compartment. Belly pans shall be vented to prevent the accumulation of liquids, except composite/honeycomb structures. All rear-engined Formula cars are required to have an undertray, from driver's foot area to the firewall, for protection of legs and torso.

9.3.25. FORMULA CAR VISIBILITY

The driver of all Formula cars shall have a field of vision of not less than ninety (90) degrees to either side (total of 180 degrees) with both eyes by turning his or her head, but without lifting his or her head forward or otherwise moving from the normal driving position. Plexiglas or similar uncolored transparent material may be substituted for existing bodywork. "Token" portholes do not satisfy this requirement. Only a structural member such as a roll bar brace or frame tube may interrupt the required field of vision.

9.3.26. FUEL

All cars shall use fuel, as defined below, unless a specific exemption is made in the provisions for a specific category/class.

A. Permitted Fuel

Permitted fuel is herein defined as *gasoline or diesel fuel* meeting specified dielectric constant standards and not containing any prohibited substance in excess of stated limits. Gasoline is a mixture of refined hydrocarbons. Gasoline is an electrical insulator and its relative effectiveness as an insulator is represented by its dielectric constant (D.C.). The D.C. of gasoline will be measured by an SCCA Fuel Check Meter (Precision Fuel Testing G-01 Fuel Analyzer, Kavlico FT-K01 Fuel Tester *or Digatron DT47-FT fuel tester)*. The *0 (zero)* calibration of the SCCA Fuel Check Meter is set against reagent or laboratory grade cyclohexane. Gasoline may be tested and certified at SCCA events by the deter¬mination of the dielectric constant using the SCCA Fuel Check meter and through the application of various chemical analyses. If a competitor's fuel is not compliant with the fuel standards below, the Chief Steward shall take appropriate action (Chief Steward's Action or Request for Action). In addition, fuel may be subject to laboratory testing.

If a car is required to run diesel fuel, it will be noted on its specification line. Diesel fuels must have a dielectric constant between 2.2 and 4.9 *(G-01 or FTK-01) or between 24 and 55 (DT-47FT)*. Diesel fuels are subject to the same restrictions on prohibited substances as gasoline.

Any participant may protest the fuel in any car to determine compliance with the provisions of these fuel rules. In addition to the standard protest fee, a bond shall be collected from the protestor and the driver or entrant of the protested car. The bond covers the cost of laboratory testing of the fuel sample(s) and transportation costs. The laboratory testing shall be limited to determining the presence of any prohibited substance in excess of the allowed amount. If the test is negative, the protestor's bond will be used to pay the laboratory fees and transportation. If the test is positive (any banned substance present in excess of the stated limits), the protested driver's or entrant's bond will be used to pay the laboratory fees and transportation costs. The unused bond will be returned. In the case of a CSA or RFA resulting in laboratory testing, the organizing Region shall take the role of the protestor. If the laboratory results show that the protested fuel is non-compliant, the Chief Steward or the SOM shall assess appropriate penalties. The amount of each bond is $250.

Fuel Standards		
Classes	**Type**	**DC max**
SSB, SSC	EPA-compliant fuel meeting the manufacturer's requirements as stated in the owner's manual	*G-01 or FTK-01-* 15 *DT-47FT- 166*
All other classes	Gasoline with or without added oil	*G-01 or FTK-01-* 15 *DT-47FT- 166*

The use of any substance in the following table in excess of the stated limit is prohibited.

Chemical Compounds Prohibited or Restricted in SCCA Race Fuels		
Compounds	**Examples**	**Maximum Weight or Percentage By Weight Allowed**
Total Aldehydes	Acetaldehyde, Acrolein, Formaldehyde	1.0%
Benzene		5.6%
3,3-dimethyl-1-butene		0.05%
Total ethers *except MTBE*	1,4 Dioxane, Furan, Tetrahydrofuran	0.05%
MTBE		*3.0%*
Total Dienes(Diolefins)	1,3 Butadiene, Isoprene	1.0%
Ethanol		10.0%
Total Epoxides	Ethylene oxide, Propylene oxide	0.05%
Methanol		1.0%
Total Metals (elemental,non-lead)	Manganese (e.g.,MMT), Boron, Chromium	0/05g/gal
Total Lead (elemental)	Lead (e.g.,TML, TEL)	8.0 gm/gal
Total Nitrogen Compounds	Nitromethane, Nitro-ethane. Nitropropane, and all aromatic nitrogen compounds such as Nitrobenzene, Ammonia, Amines and their salts, Aniline, Hydrazine, Pyri-dine, Pyrrole, Benzidine	0.05%
Styrene		1.0%
Total Sulfur Compounds	Dimethylsulfoxide, Thio-phene	0.05%

B. Fuel Sample Acquisition

All cars shall be equipped with an accessible sampling port/valve/device

located in a fuel line between the fuel tank or fuel cell and the carburetors or fuel injection system or in an unused carburetor port to allow safe acquisition of a fuel sample. If possible, the port/valve/device should be located outside the engine compartment. The sampling port/valve/device will be installed and used by the competitor to obtain the sample without fuel leaking, spraying or squirting. Siphoning of fuel directly from the fuel tank or fuel cell or removing a hose or line is not allowed.

Competitors whose cars are equipped with a factory fuel pressure test port or who have factory fuel pressure test equipment available are not required to have an additional fuel sampling port, providing the test port is accessible and the competitor obtains the sample without fuel leaking, spraying or squirting.

Competitors will provide all the necessary and appropriate tools to obtain a fuel sample.
A tech observer and manned fire extinguisher will be at the car at the time the sample is taken and the competitor will name the fuel brand and type for notation on the fuel sample bottle label.

9.3.27. FUEL CELL SPECIFICATIONS

All cars must be equipped with a safety fuel cell complying with these specifications, except for Showroom Stock, Touring, Spec Miata, Improved Touring, *production-based Vintage cars*, or as otherwise specified *in the GCR.* All safety fuel cells shall be constructed and certified in accordance with the FIA FT-3 or higher (FT-3.5, FT-5, etc.) specifications. Alternatively, safety fuel cells shall be constructed in accordance with FIA FT-3 or higher specifications and tested to those requirements by an independent facility as witnessed and certified by a Professional Engineer. The results of these tests shall be submitted to the Club Racing department for inclusion on a list of approved suppliers. All safety fuel cells shall consist of a foam-filled fuel bladder enclosed in a metal container at minimum.
There is no restriction of fuel cell capacity or dimensions of the fuel cell, except where otherwise specified.
The installation of more than one cell is permitted.

1. Installation

Internal body panels may be modified to accommodate the installation of fuel cells as long as modifications serve no other purpose. If installation includes encroachment into the driver's compartment, a metal bulkhead must prevent exposure of the driver to the fuel cell. The fuel cell must not be installed any closer to the ground than 6 inches, unless enclosed within the bodywork or OEM floor pan.

a. There must be a metal bulkhead between the driver/passenger compartment and the compartment containing the fuel cell. This includes fuel cells that are flush mounted with driver/passenger compartment panels or otherwise exposed to the driver/passenger compartment.

b. Fuel cells must be located within 12 inches of the standard tank. The 12 inch measurement is taken from the perimeter of the stock and alternative fuel cell. Fuel filler location is unrestricted with installation of a safety fuel cell.

2. Container

a. GT and Production Category

The bladder shall be installed in a container of .036 inch steel, or .059 inch aluminum that fully surrounds the bladder.

b. Sports Racing Category and Formula Cars

The fuel bladder shall be completely surrounded by a container (which may also be a part of the structure or bodywork of the car) to ensure rigid and secure mounting of the bladder and provide additional protection. A minimum of .036 inch steel, .059 inch aluminum, or an approved equivalent is required for all vehicles.

3. Filler Cap and Vents

A positive locking fuel filler cap (no Monza/flip type) shall be used. Fuel pickup openings and lines, breather vents, and fuel filler lines shall be designed and installed so that if the car is partially or totally inverted, fuel shall not escape. Fuel filler necks, caps, or lids shall not protrude beyond the bodywork of the car.

If the fuel filler cap is located directly on the fuel cell, a check valve is not required, provided the filler cap is a positive locking type and does not use an unchecked breather opening. If the filler cap is not located on the fuel cell, a check valve must be installed on the fuel cell to prevent fuel from escaping if the cap and filler neck are torn from the tank. Fuel cell breathers shall vent outside the car. The cell need not incorporate a drain fitting. It is recommended that all lines, filler openings, and vents be incorporated in a single fitting located at the top of the fuel cell.

In Formula and Sports Racing cars registered prior to January 1, 1994, the filler cap and neck are exempt from the bulkhead requirements of *9.3.27.1.a*.

Factory installed gas tank evaporative emission control devices must be removed from all Production and GT Category cars. Fuel cell vents must not discharge into the driver/passenger compartments, even if installed that way by the manufacturer. The fuel system cannot vent through the roll bar/roll cage structure.

4. Rotary Molded Cell

The use of rotary molded fuel cells not having a bladder, or not contained in a metal can, is allowable in those cars that do not require the use of a fuel cell, but where they are an allowed option.

9.3.28. FUEL, OIL, AND WATER LINES

All fuel, oil, and water lines, including gauge and vent lines, that pass into or through the driver/passenger compartment, shall be of steel tube or metal braided hoses or bulkheaded. The driver shall not be exposed to header tanks.

9.3.29. IDENTIFICATION MARKINGS

Each car shall carry identification numbers and class letters per A and B, below, SCCA logos per C, below; and any markings required by the Supplemental Regulations.

A. Numbers and Class Letters

Numbers shall be placed on the front and both sides of the car so that they are legible. All Formula cars with a rear wing shall have legible numbers on each rear wing side plate. Numbers shall be no more than 2 digits, and shall meet the approval of the Chief of Timing and Scoring. 3 digit numbers may be used when individually approved in advance by the Chief of Timing and Scoring. Class letters shall be placed on both sides of the car so that they are legible. Rear numbers and class letters are recommended. The numeral "1" shall be exclusively reserved for the current national champion in each class for national events. If 2 or more national champions are entered in the same run group, the first to register shall have preference.

B. Size of Numbers and Class Letters

Numbers shall be at least 8 inches high, with a 1.5 inch stroke on a contrasting background (rear winged Formula cars shall have as large a number as possible on their rear wing side plates). Metallic (reflective) numbers and class letters are prohibited. The distance between 2 numbers shall be at least as wide as the stroke of the numbers. Class letters shall be at least 4 inches high, with a 1/2 inch stroke on a contrasting background.

C. SCCA Logo

Each driver's suit shall display the official SCCA uniform patch logo (see figures 2 and 3). Each car competing in an event shall display the official SCCA field logo (see figures 4 and 5) unobstructed and prominently on both sides of the car and adjacent to the side numbers. A third logo shall be displayed on the front of the car unobstructed and prominently near the front number. The logo shall be on the spoiler of cars so equipped. Effective 3/1/2010 for SCCA National Races, the SCCA Field Logo will consist of the National Series Logo (Figure 4A) For Regional Races and SCCA Driver Schools, either the SCCA Field Logo or the National Series Logo will be acceptable.

Figure 2
(SCCA or SCCA Club Racing Uniform Patch)

Figure 3
SCCA Uniform Patch (Right Side Preferred)

Logos and decals of sanctioning bodies other than SCCA shall be removed or covered (car and driver's suit).
Vintage cars when participating in vintage events may use the four (4) inch diameter "SCCA Wire Wheel" in place of the current field logo.

Figure 4

Official SCCA Field Logo
Item #2608 (8.5 x 3.5 inches)

Figure 4a

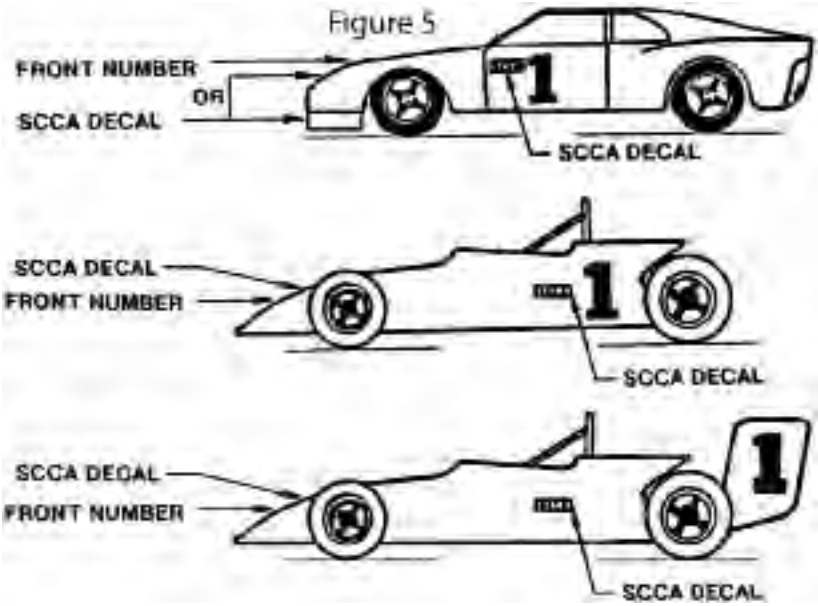

9.3.30. INSIDE NET

An inside net running between the main roll hoop and the dash is recommended for all production-based cars and two-seater Sports Racing cars (see figure 6). It is recommended that the lower strand of the net pass the shoulder and run horizontally from the cage to the dash. The upper strand should pass the Cg of the helmet in the side view. The net should run parallel to the center of the car in plain view and be as close to the seat as possible. It is recommended that the net be tensioned tightly and have a way to quickly disconnect it in case the driver needs to exit through the car in an emergency. Metal collars, or some other equivalent method, should be used to keep the strands of the net from moving along the roll cage. If possible, the recommended mounting method is to wrap the net strands around the back of the seat and attach them to the main hoop upright. However, teams should consult the net manufacturer to verify their recommended method of mounting.

9.3.31. LEAKAGE AND CAPS

There shall be no visible fluid leaks.

9.3.32. LIGHTS

All non-Formula cars shall have two operating red brake lights. All Formula (open wheel) and Sports Racing cars shall be equipped with a red taillight of at least the equivalent illumination power of a 15 watt bulb. This light shall be mounted as high as possible on the centerline of the car and be clearly visible from the rear. The taillight shall be illuminated when ordered by the Chief Steward. Light assemblies shall be considered one light for the purposes of this rule, irrespective of the number of individual lamps the assembly may contain. Light assemblies may perform both rain and brake light functions provided they have two distinct illumination levels. *An optional tail light ("rain light"), as described*

above, may be added to cars in all other classes.
Exposed glass headlights shall be taped. Rear brake lights may be taped with transparent tape. Turn signals, front parking lights, backup lamps, and side marker lights may be taped or painted. Lights mounted on or below the bumper shall be removed, and all resulting holes shall be

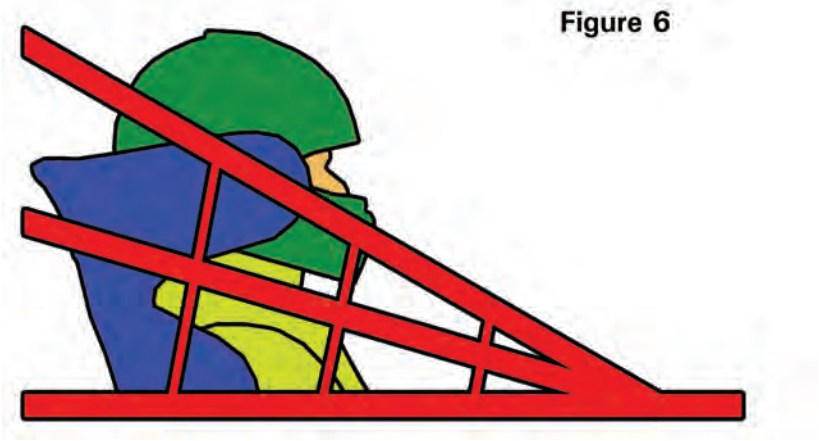

covered to prevent air passage through said holes.

9.3.33. LOSS OF BODYWORK

All major body components such as front and rear hoods, fenders, doors, and windscreens shall be maintained in normal position throughout the competition. If loss of bodywork is a safety hazard, the car may be black-flagged. A car completing a competition with bodywork missing may be penalized.

9.3.34. MASTER SWITCH

All cars, except Showroom Stock and Touring shall be equipped with a master switch easily accessible from outside the car. Spec Racer Fords shall be wired per RFSRII. The master switch shall be installed directly in either battery cable and shall cut all electrical circuits but not an on-board fire system. All terminals of the master switch shall be insulated to prevent shorting out. It shall be clearly marked by the international marking of a spark in a blue triangle and mounted in a standard location. Off position shall be clearly indicated at the master switch location. The standard locations shall be as follows:

Kill Switch
Item #2606

A. Formula and Sports Racing Cars–In proximity to the right-hand

member of the roll bar, but in a location so that it cannot be operated accidentally. It can be mounted on a bracket welded to the inside of the upright member or mounted so that the operating lever or knob is outside of the body panel immediately in-board of the upright member. This is the standard location on Formula cars built to the Constructor's Association requirements for Formula 1.

B. Closed Sports Racing Cars, Production Cars, Improved Touring and GT Cars–In front of the windshield on either the cowl or on top of the fender, but close enough to the windshield to be accessible if the car is overturned. Alternatively, it may be mounted below the center of the rear window or on a bracket welded, clamped or bolted to the roll cage or dash, easily accessible through the open window. (Drilling of holes in roll cage to attach the bracket is prohibited.)

C. Open Production, GT, and Improved Touring Cars–May exercise a choice among the above locations.

9.3.35. MIRRORS

Shall provide driver visibility to the rear of both sides of the car.

9.3.36. NON-METALLIC WHEEL/CHASSIS CONSTRUCTION

Non-metallic wheel construction is prohibited. Non-metallic chassis construction is prohibited, except in ASR, CSR, DSR, S2, and FA.

9.3.37. OIL AND OIL ADDITIVES

Any oil or oil additive may be used. Oil additives are defined as: Any liquid or particulate compound(s) delivered into the engine via the engine oil for the purpose of friction/temperature reduction, and/or metal surface conditioning (i.e. PTFE resins (Teflon, "Slick-50"), Molybdenum Disulfide, etc.).

9.3.38. OIL CATCH TANKS, FILTERS, AND BREATHERS

Oil holding tanks and engine breathers, whether directly or indirectly ventilating the crankcase, and all transmission/transaxle breathers shall be equipped with oil catch tanks. Minimum catch tank capacity shall be one U.S. quart for the engine and transmission/transaxle. Oil holding tanks and oil filters may be mounted in the driver/passenger compartment. A metal bulkhead shall prevent exposure of the driver to oil spillage. Oil catch tanks shall vent into the engine compartment or outside the driver's compartment. A crankcase vacuum breather that passes through the oil catch tank(s) to exhaust systems or vacuum devices that connect directly to exhaust systems is prohibited.

9.3.39. ROLL CAGE/ROLL BAR

Shall comply with Section 9.4., Driver Protection Structures.

9.3.40. SCATTERSHIELDS/CHAIN GUARDS

The installation of scattershields or explosion-proof bell housings shall be required on all cars (except Showroom Stock, Spec Miata, Touring and Improved Touring) where the failure of the clutch or flywheel could create a hazard to the driver. Chain drive cars shall be fitted with a protective case/shield to retain the chain in case of failure.

Minimum material specifications are:

.125 inch SAE 4130 alloy steel

.250 inch mild steel plate

.250 inch aluminum alloy

NHRA or SFI approved flexible shields.

9.3.41. SEATS
The driver's seat shall be a one-piece bucket-type seat and shall be securely mounted. The back of the seat shall be firmly attached to the main roll hoop, or its cross bracing, so as to provide aft and lateral support. Seats homologated to and mounted in accordance with FIA standard 8855-1999*, or FIA.Standard.8862-2009* or higher need not have the seat back attached to the roll structure. *Seats with a back not attached to the main roll hoop or its cross bracing may not be mounted to the stock runners unless they are the FIA homologated seats specified in an FIA homologated race car.* The homologation labels must be visible. Seat supports shall be of the type listed on FIA technical list No.12 *or No. 40* (lateral, bottom, etc). Passenger seat back–if a folding seat, it shall be securely bolted or strapped in place.

Mounting structures for racing seats may attach to the floor, cage and or center tunnel. Seat mounting points forward of the main hoop, between the center line of the car and the driver's side door bar and rearward of the front edge of the seat bottom are not considered cage attachment points in classes with limitations on the number of attachments.

A system of head rest to prevent whiplash and rebound, and also to prevent the driver's head from striking the underside of the main hoop shall be installed on all vehicles. Racing seats with integral headrests satisfy this requirement.

The head rest on non-integral seats shall have a minimum area of 36 square inches and be padded with a minimum of one inch thick padding. It is strongly recommended that padding meet SFI spec 45.2 or FIA Sports Car Head Rest Material. The head rest shall be capable of withstanding a force of two-hundred (200) lbs. in a rearward direction. The head rest support shall be such that it continues rearward or upward from the top edge in a way that the driver's helmet can not hook over the pad.

9.3.42. STEERING WHEEL LOCKS
Steering wheel lock devices shall be removed or disabled (except Showroom Stock and Touring).

9.3.43. STEERING WHEELS
Wood rim steering wheels are prohibited.

9.3.44. SUSPENSION AND STEERING
Suspension and steering shall be of suitable design and in good working order. Four wheel steering is prohibited. *Unless specifically permitted, non-metallic suspension control arms, locating links, toe/steering links and pushrods are prohibited.*

9.3.45. TIRES
Tires shall be 12*4 ("U")* mph rated or better unless otherwise specified or controlled.

In the Improved Touring, Super Touring, American Sedan, Showroom Stock, Spec Miata and Touring categories, only DOT approved tires are permitted. Racing, recapped, or re-grooved tires are not allowed. Tire size is unrestricted unless otherwise stated. The only modifications allowed to

tires are having treads "shaved" or "trued."

9.3.46. TIRE WARMERS

Pre-heating of tires prior to competition by electrically heated covers or similar means is prohibited on the grid.

9.3.47. TONNEAU AND BOOT COVERS

Tonneau covers and boot covers shall be removed.

9.3.48. TOWING EYES

All cars without an exposed roll bar shall have a towing eye or strap, front and rear that does not dangerously protrude from the bodywork when the car is racing, to be used for flat towing or hauling the vehicle. A removable towing eye carried inside the car is not acceptable, except in formula cars and Sports Racing cars. These towing eyes or straps shall be easily accessible without removal or manipulation of bodywork or other panels. Towing eye minimum ID 2 inches.

The required tow eyes must be strong enough to tow the car from a hazard such as a gravel trap. Front tow eye may be mounted in the driver/passenger side window openings, or any location forward of the windshield. If mounted in the driver/passenger side window openings, it must be attached to the forward roll cage down tube as close to the base of the windshield as possible. If the front tow eye is located in the side window openings there shall be one on each side of the car. Rear tow eyes must be accessible rearward of the rear axle centerline.

In addition, for Formula and Sports Racing cars, if the main hoop is faired in, the fairing shall have access holes to allow the insertion of a bar or strap to allow the car to be lifted by a wrecker.

9.3.49. VENTILATION

Holes for ventilation in quarter or rear windows on Production or GT cars are not allowed, unless specified in PCS or GTCS, respectively.

9.3.50. WEIGHT

All cars shall meet or exceed the minimum weight specified with driver, exactly as they come off the race circuit, at the conclusion of a race or qualifying session.

9.3.51. WHEEL FANS

Wheel fans are permitted, unless otherwise restricted.

9.3.52. WHEEL RIM WIDTH

Wheel rim width shall be measured at the base of the bead seat.

9.3.53. WINDOWS

Windows shall be clear or uncolored, except in Production, Super Touring, Touring, and Showroom Stock if no factory or after market clear windows are available. Officials may require the replacement of windshields that are considered a safety hazard. All closed cars shall run with both front door windows fully open.

9.3.54. WINDOW SAFETY NETS

Window safety nets shall be used on the driver's side window of all closed cars. All window nets shall meet SFI Specification 27.1., and shall bear an "SFI Spec 27.1., Label" to that effect. (Note: Window nets need not be dated.) The window net shall be equipped with a quick-release device and when released it shall fall down, thus not having to be flipped up on the roof. Nets shall be attached to the roll cage; plastic buckles, cable ties, hose clamps, and elastic cords are not permitted. Holes in the roll cage to accommodate either support rod are unaccept-

able unless bushed and welded completely. Refer to figures 7 and 8, "Proper Window Net Installation," for additional information on mounting methods. Closed cockpit Sports Racing cars may use arm restraints in lieu of a window net. *Legends Cars are not required to have window nets.*

Figure 7

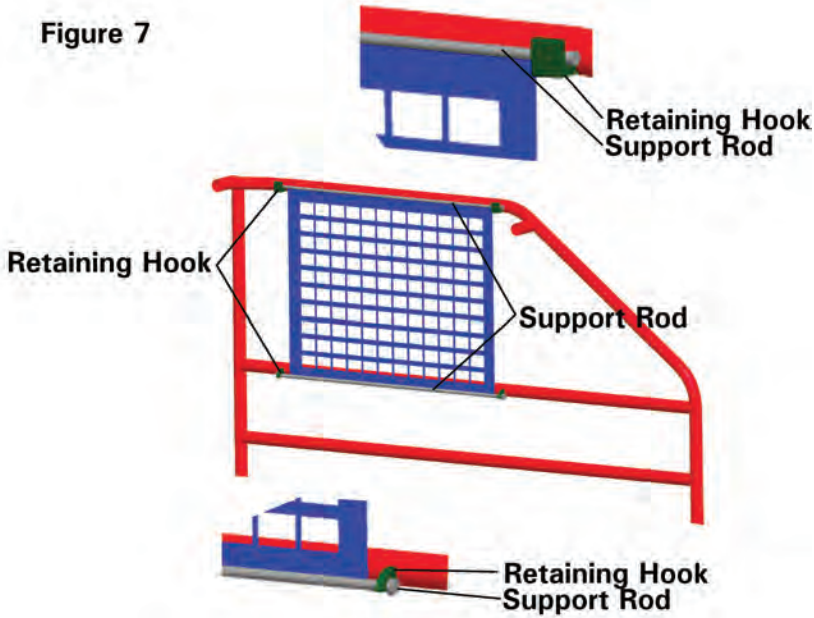

Figure 8

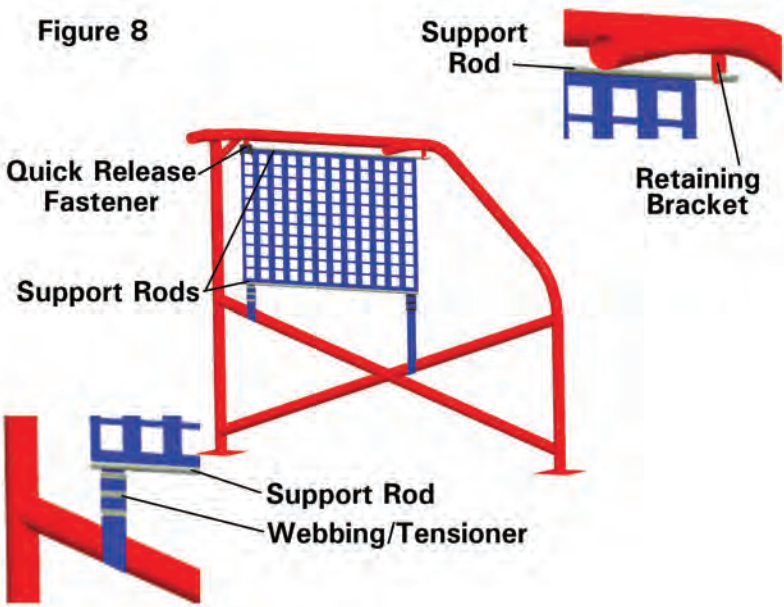

9.3.55. WINDSHIELD CLIPS/REAR WINDOW STRAPS

Windshield safety clips and rear window safety straps shall be installed on all closed cars (except Showroom Stock, Spec Miata, Touring, Improved Touring, and Super Touring).

3 clips (3 inch x 1 inch x 1/8 inch) shall be bolted or riveted to the body at the top of the windshield.

2 clips (3 inch x 1 inch x 1/8 inch) shall be bolted or riveted to the cowl and extend over the bottom edge of the windshield. Clips shall be spaced a minimum of 12 inches apart.

It is recommended that 3 – 1 inch wide strips of steel or aluminum be installed behind the windshield to support it from collapsing inwards if it becomes damaged. The rear window shall be secured with 2 metal straps (1 inch wide x 1/8 inch thick) bolted or riveted to the body at the top and bottom of the rear window.

9.4. ROLL CAGES FOR GT AND PRODUCTION BASED CARS

All cars must utilize a roll cage compliant with the following specifications. These specifications apply to all vehicles registered (issued an SCCA logbook) after 1/1/08. Cars registered before 1/1/08 may continue to compete with their previous roll cage as specified in Appendix I. Cars registered as Production class cars prior to 1/1/08 may continue to use their existing roll cage per Appendix J.

A. DEFINITION

The roll cage consists of the main hoop, front hoop, side protection, and braces as specified in these rules.

B. MAIN HOOP

1. The main hoop (behind the driver) must be the full width of the cockpit for all cars. It must be one continuous length of tubing with smooth bends and no evidence of crimping or wall failure. The main hoop must maintain a single plane.

   a. On all closed cars, the main hoop must be as close as possible to the roof and “B” pillars.

   b. Open cars without the windshield frame may use an asymmetric main hoop. The main hoop must be full width to the passenger side of the car. On the passenger side of the car the hoop must be at least as high as the top of the rear corner of the door as illustrated in figure 9.

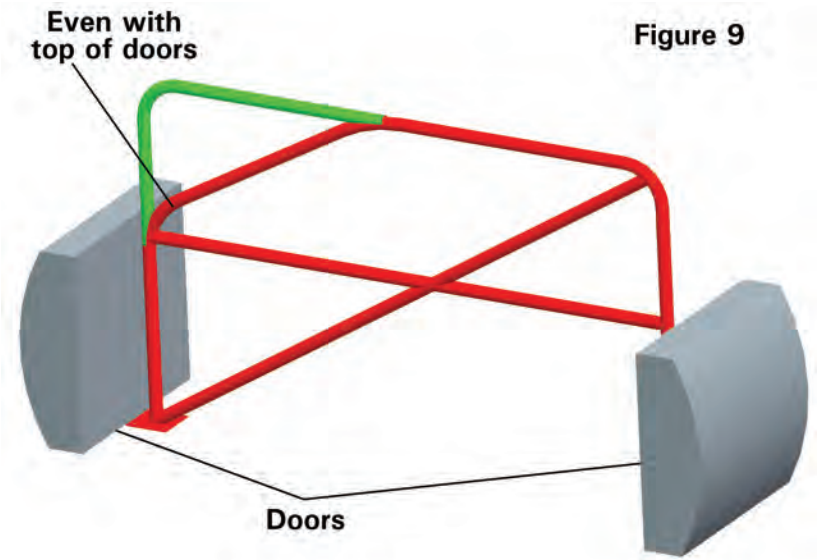

Figure 9

The main hoop must be high enough that a straight line drawn from the top of the main hoop to the top of the front hoop would pass over the driver's helmet and steering wheel when the driver is seated in the normal driving position. Additionally, the top of the main hoop must be at least 2 inches above the driver's helmet as illustrated in figure 10.

Figure 10

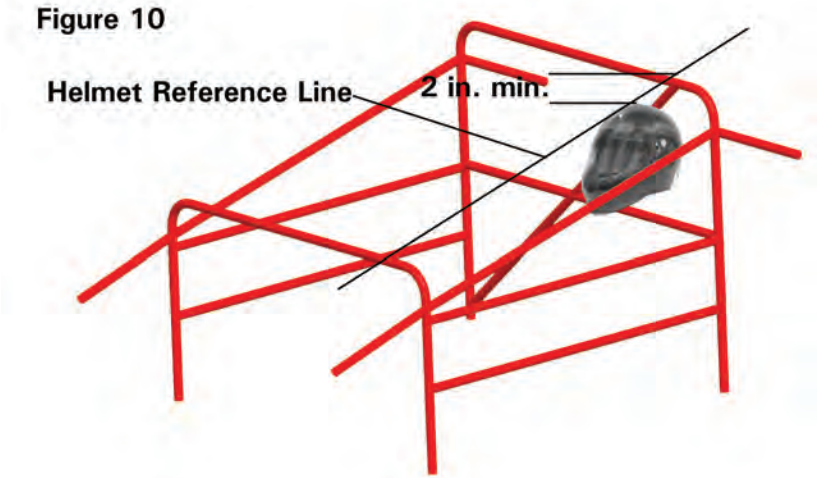

c. On open cars retaining the windshield frame the main hoop must be full height for the entire width of the hoop. The top of the main hoop must be at least 2 inches above the driver's helmet as illustrated in figure 11.

Figure 11

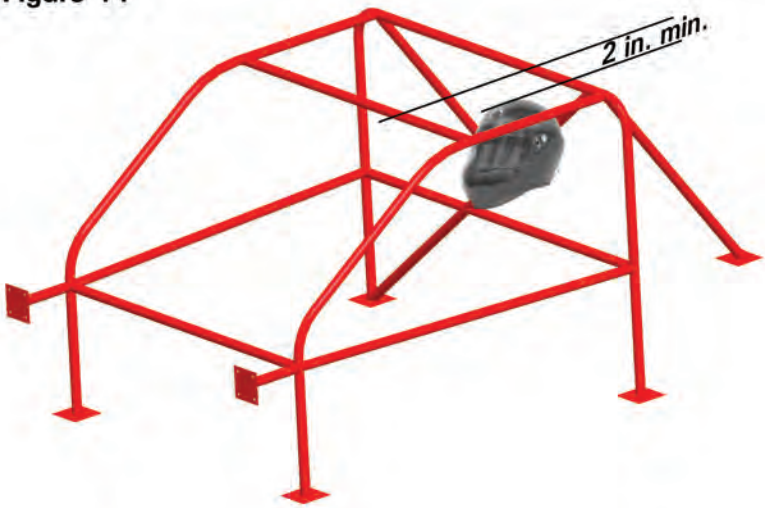

2. Main Hoop Bracing

   a. Main hoops shall incorporate a diagonal brace. The brace shall either be in the plane of the main hoop, or extend from the top of one rear brace (described in 9.4.B.2.c) to the bottom of the opposite rear brace. Automobiles with mid mounted engines can have the lower mounting point attach to the frame of the automobile within six inches of the main hoop. In the case of braces in the plane of the main hoop, the brace must span at least 50% of the width of the main hoop, and at least 75% of the height of the main hoop as shown in figure 12.

Figure 12

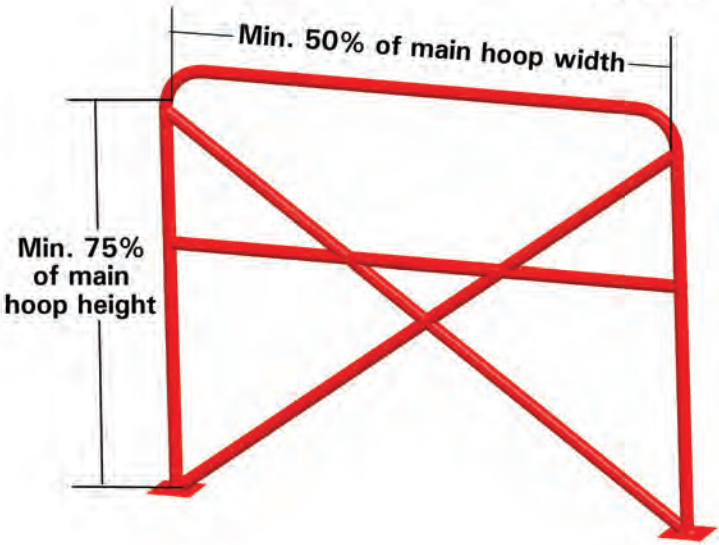

b. Cars must incorporate a main hoop horizontal brace at the approximate level of the driver's shoulders but not lower than the shoulder belt mounting point as described in section 9.3.19.C. If a double-diagonal "X" brace is used in the plane of the main hoop, a half-width horizontal brace may be used behind the driver's seat to mount the seat back and shoulder harness as shown in figure 13.

Figure 13

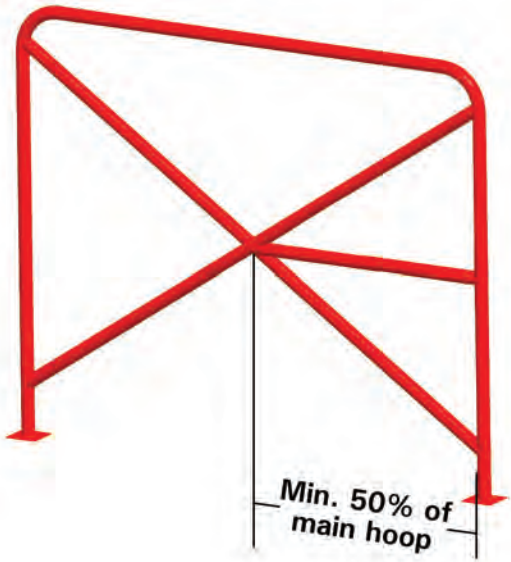

c. Cars must have 2 braces extending to the rear from the main hoop and attaching to the frame or chassis. Braces must be attached as near as possible to the top of the main hoop (not more than 6 inches below the top), and at an included angle of at least 30 degrees.

d. Open cars must have 2 braces extending forward from the main hoop and attaching to the front hoop, not more than 6 inches below the top of the front and main hoop. It is recommended that the front and rear braces attach to the main hoop as close as possible to each other.

e. On cars where the rear window/bulkhead prohibits the installation of rear braces (e.g. Honda del Sol), the main hoop shall be attached to the body by plates welded to the cage and bolted to the stock shoulder harness mounting points. This installation design must incorporate a diagonal bar connecting the top of the main hoop to the lower front passenger side mounting point (Petty Bar). Alternatively, the rear window may be removed and a clear, lexan replacement installed. The rear cage braces may pass through this replacement window and through the engine cover or bodywork to allow connection to the frame or unibody. Such allowances shall be noted on the car's specification line.

C. FRONT HOOP

1. Roll cages may be of two designs, low front hoop or high front hoop. All closed top cars and cars that retain the windshield frame must have a high front hoop design. Open cars may incorporate a high or low front hoop design. High front hoop are also referred to as side hoops.

   a. Closed cars

The front hoop (side hoop) must follow the line of the A-pillars to the top of the windshield and be connected by horizontal bars to the top of the main hoop on each side (as close to the roof as possible). Instead of a single front hoop, two side hoops (down tubes) may be used. Alternatively, a top "halo" hoop following the roof line from the main hoop to the windshield with forward down tubes following the A-pillars to the floor may be used. Regardless of which one of the two approved tubing configurations there shall be a tube connecting the two A-pillar tubes at the top of the windshield.

b. Open cars

The height of the front hoop (per section 9.4.B.1.b) must be consistent across the full width of the cockpit.

c. Front Hoop Bracing

All open cars with a high front hoop and all closed cars except those competing in the Improved Touring, Showroom Stock, and Spec Miata classes must incorporate a horizontal front hoop brace at the approximate level of the dashboard. It is recommended that cars competing in Improved Touring, Showroom Stock, and Spec Miata classes also have the front hoop brace.

2. One tube must extend, from each front down tube, forward to the firewall or through the firewall except in vehicles in Improved Touring, Showroom Stock, Spec Miata, and Touring. This tube, one on each side, must connect to the chassis at a point not more than 12 inches forward of the front axle centerline.

3. Cars competing in Improved Touring, Showroom Stock, Spec Miata, and Touring may extend one tube, from each front down tube, forward to the firewall, *bulkhead or wheel well,* but not penetrating *any panel*.

D. SIDE PROTECTION

Two side tubes connecting the front and main hoops across both door openings are mandatory. *Tubes that are welded to any part of the same mounting plate are considered to be connected to one another (see 9.4.E.3 below).* NASCAR-style side protection or one bar bisecting another to form an "X" is permitted. Door side tubes may extend into the front door. In Improved Touring, Showroom Stock, Spec Miata, and Touring the door window glass, window operating mechanism, inner door trim panel, armrest, map pockets, and inside door latch/lock operating mechanism may be removed and the inner door structural panel may be modified, but not removed only if the door bars extend into the door cavity. The stock side impact beam and the outside door latch/lock operating mechanism shall not be removed or modified unless specifically authorized in the category rules.

E. ROLL CAGE ATTACHING POINTS

1. Improved Touring, Showroom Stock, Spec Miata, AND Touring classes–The roll cage must attach to the vehicle structure (floor pan/ rocker boxes*/ sills)* within the passenger compartment in a minimum of 6 points and a maximum of 8 points as

specified in these rules.

2. All other classes–There is no limit on cage attachment points. The roll cage shall be integrated into the frame or chassis.

3. Mounting Plates

   a. Mounting plates welded to the structure of the car shall not be less than .080 inches thick nor more than 0.25 inches thick. The maximum area of each mounting plate in the Improved Touring, Showroom Stock, Spec Miata, and Touring classes shall be 144 square inches. Plates may be on multiple planes but shall not be greater than 15 inches on any side.

   b. The thickness of mounting plates bolted or riveted to the structure of the car must not be less than the thickness of the roll hoop or brace that they attach to the chassis, and must be backed up with a plate of equal size and thickness on the opposite side of the chassis panel. The maximum area of each mounting plate must be 144 square inches. Plates may be on multiple planes but shall not be greater than 15 inches on any side.

   c. Fasteners for bolted or riveted mounting plates must be Grade 5 or better with a minimum diameter of 5/16".

F. TUBING

1. Seamless or DOM mild steel tubing (SAE 1020 or 1025 recommended) or alloy steel tubing (SAE 4130) must be used for all roll cage structures. Alloy and mild steel tubing may not be mixed. ERW tubing is not allowed.

2. The following table shows the minimum allowed tubing outer diameter and wall thickness by vehicle weight:

GCR Vehicle Weight	Tubing Size (inches) (outer diameter x wall thickness)
Up to 1700 lbs	1.375 x .080
1701 - 2699 lbs	1.500 x .095 1.625 x .080
2700 lbs and up	*1.50 x .120* 1.750 x .095 *2.00 x 0.80*

3. The required tubing elements must meet the material minimums set forth above. Optional tubing elements may be any size.

4. The minus variance of tubing wall thickness due to manufacturing tolerances is limited to .010 inch.

5. Either an inspection hole between 3/16 and1/4 inch diameter must be drilled in a non-critical area of the front and rear hoops, as well as one of the supplemental braces to facilitate verification of wall thickness; or alternatively, wall thickness may be determined by non-invasive means and noted in the log book as inspected by such means.

G. BASIC DESIGN CONSIDERATIONS

1. All portions of the roll cage subject to contact by the driver must be padded with a minimum 1 inch of material. Padding

that meets or exceeds SFI 45.1 or FIA 8857-2001 (curved padding), or SFI 45.2 or FIA sports car head rest material (flat padding) specification is recommended.

2. No portion of the roll cage may have an aerodynamic effect by creating a vertical force.

3. The radius of all bends in the roll cage (measured at centerline of tubing) must not be less than 3 times the diameter of the tubing.

4. It is recommended that all joints of the roll cage be welded. All welding must include full penetration, no cold lap, no surface porosity, no crater porosity, no cracks, no whiskers, and so forth. Welds shall be continuous around the entire tubular structure. *Procedures for welding alloy steel shall be in accordance with accepted industry practice.* It is recommended that a certified AWS D1.1 welder do all welding.

5. It is recommended that gussets be used at all joints. In Improved Touring, Showroom Stock, and Spec Miata a maximum of 2 gussets per joint are allowed and must be no thicker than .125".

6. Any number of additional tube elements is permitted within the boundaries of the cage structure. Such tube elements may pass through any mandatory or optional bulkhead or panel separating the driver/passenger compartment from the trunk/cargo area/fuel tank/fuel cell area provided the bulkhead is sealed around such tube elements.

7. Removable roll cage bracing is acceptable in one of the following configurations:

   a. If one tube fits inside another tube to facilitate removal, the removable portion must fit tightly and must bottom by design, and at least 2 bolts must be used to secure each joint. The telescoping section must be at least 8 inches long. The minimum bolt diameter is 3/8 inch.

   b. Removable bracing may incorporate connectors of the double-lug, double ear-type, tapered, or muff-type as shown in figures 14 and 15. The double-lug type must include a doubler, gusset, or capping arrangement to avoid distortion or excessive strain caused by welding. Double ear-type joints must be fully welded at all the mating surfaces.

Figure 14

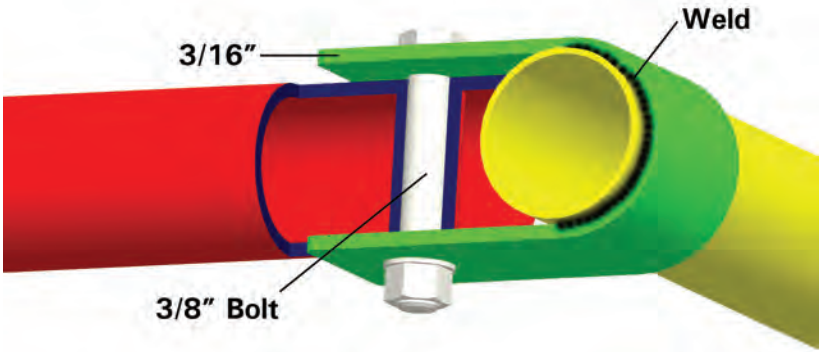

Figure 15

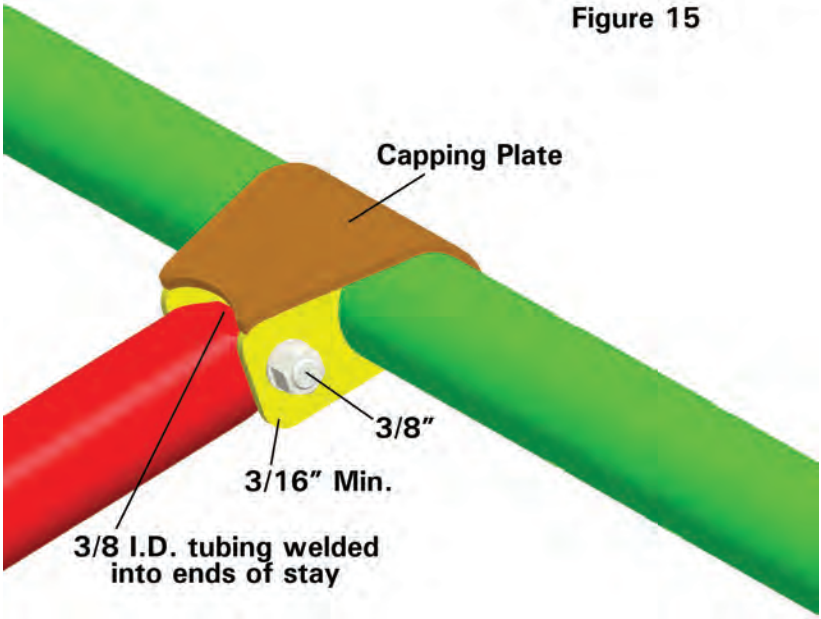

8. MANUFACTURER SUPPLIED / FIA HOMOLOGATED ROLL CAGES: Cars may compete with FIA or FIA-Approved Test Houses homologated cages provided the cage was built by the manufacturer or a manufacturer designated shop/team and approved for use. Cars must have the FIA identification plate attached to the cage along with a letter from SCCA Technical Services certifying the origins of the car, or confirmation that the cage was certified by an FIA-Approved Test House.

9.4.5. ROLL CAGES FOR FORMULA CARS AND SPORTS RACING CARS

All Formula and Sports Racing automobiles are required to have full roll cages. Cage may be of two designs, low front hoop (top of steering wheel) or high front hoop (equal to rear hoop) but with no diagonal

brace. 2 seat Sports Racing cars shall have full cockpit width cages. All tube frame automobiles shall have both front and rear hoops formed of tubing per 9.4.5.E.4. On automobiles of full monocoque construction, a fabricated sheet metal front hoop structure may be approved upon specific application to the SCCA. Closed cockpit Sports Racing car cages may be constructed in accordance with 9.4 ROLL CAGES FOR GT AND PRODUCTION BASED CARS. All Formula car and Sports Racing car roll cage tubing specifications must meet the current GCR specifications, effective 1/1/98.

A. Main Hoop

The main hoop shall be constructed of tubing per 9.4.5.E.4. The minimum bend radius shall not be less than 3 times the tube diameter measured from the tube centerline. The main hoop shall not be less than 2 inches above the driver's helmet, seated normally and restrained by seat belt/shoulder harness. A straight line drawn from the top of the main hoop to the top of the front hoop shall pass over the driver's helmet. On Formula cars and single seat Sports Racing cars the vertical members of the main hoop shall not be less than 15 inches apart (inside dimension) at their attachment to the chassis. If the hoop does not go to the belly pan, proper gussets and tube triangulation shall be used under its attachment. On monocoque chassis the main hoop shall be welded to mounting plates not less than .080" thick. It is important that these plates be attached to the chassis in such a way as to spread the loads over a wide area. There shall be a plate of equal thickness on the inside of the monocoque with solid rivets or bolts (5/16" minimum bolt diameter) through the non-ferrous material.

B. Front Hoop

Low front hoops must be no lower than the top of the steering wheel. It is recommended the hoop extend to the belly pan. If not, it shall be attached to the chassis with gussets and triangulation in order to spread the loads. In automobiles of full height (top of the steering wheel) monocoque or composite construction, a steel cap plate, not less than .080" thick must be attached as a rub block.

C. Roll Cage Bracing

1. The main hoop must have 2 forward braces extending from the hoop and attached to the frame, monocoque, or front hoop. Braces must be attached as near as possible to the top of the hoop but must not be more than 6 inches below the top and at an included angle of at least 30 degrees. If these braces do not extend to the front hoop, an additional brace or gusset (14 gauge - .078" minimum thickness) must be installed between the lower frame rail and the upper frame rail at the point of attachment of the forward hoop brace. If these braces do not extend to the front hoop, an additional brace or gusset must be installed at the point of attachment to the main rear hoop or lower frame rail or other major frame member in such a manner as to reinforce the attachment point to help prevent collapse of the frame rail at the point of attachment. These tubes shall be 1" x .080" minimum and gussets shall be 14 gauge - .078" minimum thickness.

   2 seat Sports Racing cars with full width main hoops must incorporate a lateral brace to prevent lateral distortion of the hoop (See figure 12). All bracing on full width cages must

be the same diameter and wall thickness as the main hoop. Formula and single seat Sports Racing cars under 1500 lbs., may use bracing with a minimum dimension of 1.0" diameter by .080" wall thickness. Braces attached to monocoque chassis must be welded to plates not less than .080" thick and backed up on the inner side by plates of equal thickness using bolts of Grade 5 or better with 5/16" minimum diameter.

2. The front hoop must have 2 braces near its top extending forward to protect the driver's legs. It is recommended that this bracing extend to the bulkhead in front of the driver's feet; but in any case it must be integrated into the chassis to provide substantial support for the front hoop. Full width front hoop bracing shall be a minimum dimension of 1.0" diameter by .080" wall thickness tubing.

   Formula and single seat Sports Racing cars under 1500 lbs., may use tubing with a minimum dimension of 1.0" diameter by .080" wall thickness. When monocoque construction is used as bracing for the front hoop, it must be approved on an individual basis. If a high front hoop is used, it must be similar in shape to the rear hoop and have two horizontal tubes connecting the top of the front hoop to the top of the main hoop. The bracing for the main hoop remains the same.

3. Removable bracing must incorporate connectors of the double-lug, tapered, or muff-type as shown in figures 14, and 15. The double-lug type must include a doubler, gusset, or capping arrangement so as to avoid distortion or excessive strain caused by welding.

D. Composite Chassis Safety Structures

1. The basic purpose of safety structures is to protect the driver. This purpose is the primary design consideration.

2. All cars must have at least 2 roll over structures, but the use of titanium is prohibited.

   The first roll over structure must be in front of the steering wheel, not more than 25cm forward of the steering wheel rim, and at least as high as the top of the steering wheel rim.

   The second roll over structure must not be less than 50cm behind the first. It must be high enough for a line extending from the top of the front structure to the top of the rear structure to pass over the driver's helmet when he is seated normally in the car with his helmet on and the seat belt fastened. This second structure behind the seat must be symmetrical about the lengthwise centerline of the car and comply with the following dimensions: The top of the roll bar must be at least 2 inches (5cm) above the driver's helmet when the driver is seated in a normal driving position. No second roll structure on a composite chassis will be considered unless it contains a main hoop having a minimum tubing size of 1.375" x .080" wall thickness. Supplemental braces must have a minimum tubing size of 1.00" x .080" wall thickness.

   The roll bar must be capable of withstanding the following stress loading applied simultaneously to the top of the roll bar:

   1.5 (X) laterally

   5.5 (X) longitudinally in either direction

7.5 (X) vertically

where (X) = the minimum weight of the car.

The induced loads must be carried over into the primary structure of the chassis.

The ability of the roll bar to bear and distribute the load through the chassis must be demonstrated satisfactorily in test conditions to the SCCA. In conjunction with SCCA, manufacturers of cars utilizing carbon fiber composite survival cell construction will be required to designate repair locations capable of proper evaluation and damage repair. In the event of damage to the chassis, repairs can only be made at these locations.

Proper documentation must be made in the vehicle logbook. No car will be allowed to compete after damage without following this procedure.

E. Basic Design Considerations

1. The basic purpose of the roll cage is to protect the driver if the car turns over, runs into an obstacle such as a guardrail or catch fence, or is struck by another car. It shall be designed to withstand compression forces from the weight of the car coming down on the rollover structure and to take fore/aft and lateral loads resulting from the car skidding along on its rollover structure.

2. No portion of the safety roll cage shall have an aerodynamic effect by creating a vertical thrust.

3. Roll cage or chassis design shall prevent engine intrusion into the driver compartment.

4. Material:

   a. Seamless, or DOM (Drawn Over Mandrel) mild steel tubing (SAE 1010, 1020, 1025) or equivalent, or alloy steel tubing (SAE, 4130) shall be used for all roll cage structures. Proof of use of alloy steel is the responsibility of the entrant.

   b. Minimum tubing sizes for all required roll cage elements (All dimensions in inches):

Vehicle Weight With Driver	Tubing Size (inches) (outer diameter x wall thickness)
Up to 1700 lbs.	1.375 x 0.080
1701-2699 lbs.	1.50 x 0.095 or 1.625 x 0.080
Over 2699 lbs.	*1.50 x .120* or 1.75 x 0.095 *or 2.00 x .080*

   c. For purposes of determining tubing sizes, the vehicle weight is as raced without fuel and driver. The minus tolerance for wall thickness should not be less than .010" below the nominal thickness.

   d. Either an inspection hole at least 3/16 inch diameter, but no greater than 1/4 inch diameter shall be drilled in a non-critical area of the front and rear hoop as well as the one of the supplemental braces to facilitate verification of wall thickness; or alternatively, wall thickness may be deter-

mined by non-invasive means and noted in the log book as inspected by such means. Formula Cars and Sports Racing cars with alternate roll structures are not required to have inspection holes, the wall thickness will be indicated on the back of the homologation certificate.

5. One continuous length of tubing shall be used for the main hoop member with smooth continuous bends and no evidence of crimping or wall failure. The radius of bends in the roll cage hoop (measured at centerline of tubing) shall not be less than 3 times the diameter of the tubing. Whenever possible, the roll cage hoop should start from the floor of the car, and, in the case of tube frame construction, be attached to the chassis tubes by means of gussets or sheet metal webs with support tubes beneath the joints to distribute the loads. It is recommended that gussets be used.

6. *All welding must include full penetration, no cold lap, no surface porosity, no crater porosity, no cracks, no whiskers, and so forth. Welds shall be continuous around the entire tubular structure. Procedures for welding alloy steel shall be in accordance with accepted industry practice. It is recommended that a certified AWS D1.1 welder do all welding.*

7. Aluminum bronze or silicon bronze welding technique is permitted, but extreme care shall be used in preparation of parts before bronze welding and in the design of the attaching joints.

8. Forward braces and portions of the main hoop subject to contact by the driver's helmet (as seated normally and restrained by seatbelt/shoulder harness) shall be padded with a non-resilient material with a minimum thickness of 1/2 inch. Padding meeting SFI spec 45.1 or FIA 8857-2001 is strongly recommended.

9. Cars may compete with FIA homologated cages provided the cage was built by the manufacturer or a manufacturer-designated shop/team and approved for use.

F. Exceptions for Formula Cars and Sports Racing cars

Any roll hoop design which does not comply with the specifications in 9.4.5, will only be considered if it is accompanied by engineering specifications signed by a registered engineer. No alternate roll hoop will be considered unless it contains a main hoop having a minimum tubing size of 1.375" x .080" wall thickness. The roll bar must be capable of withstanding the following stress loading applied simultaneously to the top of the roll bar: 1.5 (X) laterally, 5.5 (X) longitudinally in both the fore and aft directions, and 7.5 (X) vertically, where (X) = the minimum weight of the car.

G. Front Impact Attenuation

1. All formula cars registered or homologated with SCCA as of 1/1/1986 must have a front impact attenuation device meeting at least one of the following criteria:

   a. An FIA-approved front impact attenuation structure.

   b. A metallic structure, securely attached to the front bulkhead, with a minimum cross section of 200 sq cm (31 sq in.), 40 cm (15.75 in.) forward of the clutch and brake

pedals (not depressed), constructed of a minimum of 18 gauge 6061-T4 or equivalent aluminum.

A non-metallic composite structure, securely attached to the front bulkhead or incorporated into the nose piece, with a minimum cross section of 200 sq cm (31 sq. in.), 40 cm (15.75 in.) forward of the clutch and brake pedals (not depressed), constructed of a minimum of 6 mm stabilized (e.g., honeycomb) material with inner and outer reinforcements of a minimum of 2 5-ounce laminate material (fiberglass, carbon, Kevlar, and so on).

2. Formula Vee and other formula cars using the VW sedan H-beam front suspension must satisfy the requirements of section 9.1.1.C.3.A.10 or use any of the structures listed in 9.4.5.G.1.

3. Formula Mazda cars may use the spec front wing support as a front crush structure, or any of the structures listed in G.1 above.

4. Radiators may be incorporated in impact attenuation structures.

5. Composite impact attenuation structures may incorporate carbon and/or kevlar regardless of any class restrictions on materials.

6. Rear impact attenuation structures are strongly recommended for all formula cars, and may incorporate the materials and/or construction techniques listed above for front impact attenuation structures.

7. Pre-1986 formula cars and all Sports Racing cars are strongly urged to use front and rear impact attenuation structures, and may incorporate the materials and/or construction techniques for front impact attenuation structures listed above.

APPENDIX A. ADMINISTRATIVE GLOSSARY

The following nomenclature, definitions, and abbreviations shall be used in the GCR, all Supplemental Regulations and Entry Forms, and for general use.

When used throughout the SCCA Club Racing Program, the GCR, and all event related material, the following terms and abbreviation will be defined as indicated.

1. Federation Internationale de l'Automobile (FIA)
The International Federation of National Automobile Clubs.

2. Federation Internationale du Sport Automobile (FISA)
The International Sporting Commission which is appointed by the FIA to deal with competition matters.

3. Code Sportif Internationale of the FIA (The Code)
The International Sporting Code. FIA listed events sanctioned by the SCCA are also governed by The Code.

4. National Sporting Authority (ASN)
A national governing body of automobile competitions recognized by the FIA.

5. Automobile Competition Committee for the United States FIA, Inc. (ACCUS FIA)
The ASN of the United States of America.

The Automobile Competition Committee for the United States (ACCUS) is recognized by the FIA as the ASN (National Sporting Authority) of the USA. Under the terms of the International Sporting Code of the FIA, ACCUS is the sole authority for the control of international automobile competition in the USA, its territories, and protectorates.

6. Club Racing Board
The SCCA Club Racing Club Racing Board (CRB) establishes rules and standards for scheduling, organizing, and conducting SCCA sanctioned Club Racing events, and the licensing of drivers and officials. The CRB supervises the execution of these rules and standards.

The CRB may appoint Advisory Committees to assist in reviewing member requests for rules development and changes to individual vehicle specifications, and to solicit and make recommendations to the CRB based on their research and knowledge. Advisory Committee members serve at the discretion of the CRB and the Board of Directors.

7. SCCA Divisions
Geographic segments of the SCCA, established to facilitate administering SCCA policies, competitions, events and the GCR under the direction of the CRB and its Advisory Committees.

8. Executive Steward
The individual appointed by the Board of Directors in each SCCA Division to supervise and administer SCCA policies and standards for all Club Racing events.

9. Car (Automobile)
A self propelled land vehicle running on 4 wheels which are not in a line and which must be in contact with the ground. At least 2 wheels affect the steering and at least 2 the propulsion.

10. Class
A group of cars, classified according to the provisions of the GCR.

11. Category
A combination of similar classes of cars.

12. Competition
A contest for driver and car, given a competitive nature by publication of results. Practice and qualifying for starting positions are included in the term "competition". A competition may also be referred to as a "race".

13. Event
An entire program of competitions.

14. Speed Event
A program of competitions when there is more one car on the course at a time, cars are driven at maximum speeds, and a high level of driver and vehicle safety equipment is essential.

15. Non-Speed Event
An event in which the hazards do not exceed those encountered in legal travel on public roads, and which therefore do not require drivers to hold Competition Licenses.

16. Sanction
The documentary authority, granted by the SCCA, to organize and hold a competition.

17. Session – A session begins when the first race car in the Race Group exits the grid onto the racing surface and ends when the last running race car exits the racing surface. If the session is a race, see 6.10.3.A. for time limits.

18. **Supplemental Regulations**
Event regulations that establish the additional ground rules of competition and that are consistent with the GCR. See 3.5.

19. **Driver**
A person named as the driver of a car in any competition. Also, any person who drives a race car in any competition whether or not properly registered, entered, or named as the driver.

20. **Entrant**
A person whose entry is accepted for any competition. The signature on an entry form and the membership number must be that of an individual SCCA member.

21. **Participant**
Any person admitted to an event after having signed a SCCA authorized Release and Waiver of Liability Agreement.

22. **Tow Fund**
The fee for each paid entrant remitted to the National Office by the organizer at the conclusion of each National race into a fund to be distributed to entrants in the Runoffs.

APPENDIX B. ORGANIZATIONAL AND ADMINISTRATIVE PROCEDURES FOR EVENTS

This section contains administrative procedures and information for members and race organizers. This section mandates certain actions, but it may not be protested or appealed.

1. RACE EVENT SCHEDULING

1.1. Divisional Scheduling Representative

A Divisional Scheduling Representative is appointed for each division by the Divisional Executive Steward. The term of appointment shall be from July 1st until June 30th of the following year.

1.2. Scheduling Policies and Procedures

Immediately upon appointment, the Divisional Scheduling Representative shall prepare a list of available National Championship race dates for the following calendar year for his or her Division. The list of available National Championship race dates shall be mailed by the Divisional Scheduling Representative to the Regional Executive of each region in the division no later than August 15th. Written requests for National Championship race dates shall be returned to the Scheduling Representative no later than October 15th. To be considered a firm date request, the region's request shall be confirmed in writing by the circuit owner or manager. The schedule of available dates may note and assign traditional dates on a tentative basis, may recognize holiday weekends established by tradition or law, and may otherwise be formulated in compliance with the following scheduling policies:

A. There shall be at least 6 National Championship races in a division, unless a waiver is granted by the Board of Directors.

B. In conflicts involving a non-spectator and a spectator race, preference will be given to the spectator races.

C. Wherever possible, avoid scheduling National Championship races on consecutive weekends.

D. A region shall not conduct more than 2 National Championship events.

E. There shall not be more than 2 National Championship events on any one course.

F. No National races shall be scheduled after Labor Day weekend.

G. Scheduling of National Championship races on 3 consecutive weekends in the same division is prohibited. Waiver of this policy can only be made by the Board of Directors.

H. A Double National is defined as 2 National races at the same facility within a contiguous 3-day period. Double National races will be run under the following conditions:

   1. No more than 1/4 of the regions within in the division object.

   2. Should be held on a 3-day National holiday weekend and should be a 3-day event.

I. The Club Racing Department, working with each Divisional Executive Steward, and the Area Director, is to establish the ratio of drivers schools to Nationals for each racing division.

J. Principal SCCA Club events will not be scheduled on National Convention dates.

1.3. Exceptions to Scheduling Policies
Requests for exceptions to the above scheduling policies shall be made in writing to the Manager of Club Racing and to the Divisional Scheduling Representative. Their recommendation requires the approval of the Chairman of the Club Racing Board.

1.4. Final Schedule
The Scheduling Representatives shall mail copies of the final racing schedule for their division to the Manager of Club Racing (WITH THE APPROPRIATE NON-REFUNDABLE CALENDAR LISTING FEES–See AppB.1.5.); and to the Chairman of the Club Racing Board, the Regional Executives of all regions in their division, and to the Scheduling Representatives of the other divisions no later than December 1st.

1.5. Calendar Listing Fees
A calendar listing fee is required for National, Regional, Restricted, and Driver School events as a condition for SCCA calendar approval. Change-of-date requests are considered as new applications, and a separate fee is required. A single $25 fee is required for each weekend of racing.

Calendar listing fees, payable to SCCA, are forwarded to the Scheduling Representative with date applications. On approval of the date, the fees are forwarded to the National Office. If a date request is denied, the Scheduling Representative returns the fee to the applicant. The purpose of the calendar listing fee is to bring about a more stable calendar as promptly as possible. The calendar listing fees are separate and distinct from the Sanction fees.

1.6. Schedule Changes
The Scheduling Representative shall notify the parties listed in AppB.1.4, Final Schedule, as changes are made in the final schedule.

2. RACE EVENT FEES
2.1. Event Related Fees

A. Sanction Fee

The sanction fee listed on the sanction application must be paid with the application within the stated deadline.

B. Late Sanction Fee

A late fee of 50 percent of the sanction fee shall be charged on all sanctions postmarked after the applicable deadline, unless prior arrangements have been made and approved by the National Office Sanction Administrator.

C. Excess Sanction Fee

Upon conclusion of all Regional, Double Regional, National and Double National events, the organizing region shall submit to the SCCA the Excess Sanction fee for every car exceeding 150, per sanction number, within 14 days following the event. No further sanctions will be issued to a region until this has been paid.

D. Sanction Fee Refunds

There shall be no refunds of Sanction fees unless notice of cancellation is received by the National Office at least 15 days prior to the event.

E. Tow Fund

Upon conclusion of a National or Double National race, the organizing region will remit immediately to the SCCA the funds specified by the Board of Directors per paid entrant in National classes only for a fund authorized by the Board of Directors to be distributed to entrants in the Interdivisional Championship events. No further sanctions will be issued to a region until this has been paid.

F. Compliance Surcharge

Upon the conclusion of a Regional or National race, a $10 surcharge for each Spec Racer and Formula Enterprises car that turned a wheel on the course must be submitted to the SCCA National Office.

G. Volunteer Fee

Upon the conclusion of a Drivers' School, Regional, or National race, a $2 per entry fee must be submitted to the SCCA National Office to support the SCCA volunteer incentive and rewards program.

H. Insurance Fee

Prior to an event, the appropriate premium must be sent to the SCCA for mandatory event insurance coverage. The fee schedule is available from the SCCA National Office, or on the SCCA web site.

I. Excess Insurance Fee

At the conclusion of every sanctioned event, a per car fee must be submitted according to the fee schedule available from the SCCA National Office, or on the SCCA web site.

3. INSURANCE COVERAGES AND *LIMITS*

3.1. Coverage And Limits

The minimum coverage and limits for competitive events are:

A. Event Liability Coverage

Bodily Injury and Property Damage Liability; Contractual Liability (written and oral); Personal Injury/Advertising Liability; Host Liquor Liability; Participant Legal Liability (including participant to participant liability); Official Vehicle and Personal Property Damage; Pollution, Sudden and Accidental; Medical Malpractice liability.

The policy shall designate as additional insureds, among others: The Sports Car Club of America, Inc., SCCA Pro Racing, Ltd., regions chartered by the Sports Car Club of America, Inc., and their respective officers, members, officials, car owners, drivers, pit crews, entrants, their successors and assigns, sponsors, advertisers, and land owners while involved in and acting in their capacity during the presentation or conduct of an event. Additional names may be required. An updated list will be available from the SCCA Risk Management Department.

Minimum Limits

General Liability (including participant legal liability)–$5,000,000 per occurrence CSL (general aggregate applies per event)

Directors, Officers, and Stewards Errors and Omissions Liability–$100,000

Medical Malpractice Liability (excess coverage)–$5,000,000

Official Vehicle and Personal Property Damage–$50,000, $500 deductible

B. Participant Accident Coverage–SCCA Event Insurance Plan is required.

Accidental Death–$25,000

Blanket Medical Reimbursement–$50,000

Disability Income–$100 per week for the first 104 weeks after a seven (7) day waiting period

Accidental Dismemberment–Up to $10,000 according to schedule

All Participants are covered by Participant Accident Insurance.

3.2. Increased Limits For Licensed SCCA Members
$1,000,000 medical expense reimbursement benefits are provided to SCCA members properly credentialed for an event.

3.3. Alternative Liability Insurance Procedures For Events
The organizers and/or promoters of any SCCA-sanctioned event which is to be insured with liability coverage other than that provided by the current SCCA Master Insurance Plan shall adhere to the following:

A. A fully worded and certified Liability Policy (or policies) of insurance equivalent to the requirements set forth in AppB.3.1.A, Event Liability Coverage, shall be forwarded to the SCCA Risk Management Department so that receipt of the Liability Policy (or policies) will occur not less than twenty (20) days prior to the scheduled commencement of the event to be insured by such Liability Policy (or policies). The Risk Management Department in its sole discretion, shall determine whether the Policy is equivalent and acceptable.

B. If such fully worded and certified Liability Policy (or policies) is not received by a date twenty (20) days prior to the scheduled commencement of the event to be insured, the Risk Management Department shall have the right, but not the obligation, to cause the event to be insured for liability under the current SCCA Event Insurance Plan. Certificates evidencing such coverage and a billing for the appropriate premium charge therefore shall be sent to the event organizers and promoters. In case the premium charge is unpaid by a date fourteen (14) days prior to the scheduled commencement of the event, the Risk Management Department shall cause the event to be canceled.

APPENDIX C. LICENSING AND TYPES

1. OFFICIAL'S LICENSING AND TYPES

1.1. Official

1. Regional
2. Divisional
3. National
4. Senior

1.2. Steward

1. Steward-in-training
2. Regional
2. Divisional
3. National
4. Senior

1.3. Licensing Requirements

A. Only SCCA members may be licensed.

B. License applications are available from Divisional Specialty Administrators, Regional Licensing Chairmen, online at the SCCA official web site, and by mail from the SCCA National Office.

C. Except for the Senior License level, all Licenses are for one year, concurrent with the membership term.

D. Following the initial year, the renewal minimums are as follows:

1. *Divisional* Renewal : Six (6) days at SCCA Sanctioned events in the preceding 12 months.
2. National Renewal: Eight (8) days at SCCA Sanctioned events in the preceding 12 months.
3. Senior Renewal: Must be approved by Divisional Administrator and Executive Steward every three (3) years.

E. Anyone not meeting the participation requirements for his license (upgrade or renewal) is advised to contact his Divisional Specialty Administrator, who may waive requirements.

F. Upgrading to the next level of license is dependent upon the specialty.

G. License Renewal/Upgrade Forms are mailed automatically to license holders in advance of the expiration of the current License.

1.4. Licensing Minors

A. The SCCA defines a Minor as an individual between 15 years and the age of majority as determined by the law in the state of the individual's residence (typically 18 years old, but it may vary). A Minor may apply for an SCCA Official's License.

B. Only the National Office may issue an Official's License to a Minor. In addition to the Specialty License Application, a Minor applicant must submit the following to the National Office:

1. A completed Parental Consent, Release and Waiver of Liability,

Assumption of Risk and Indemnity Agreement. This document must be filed annually until the Minor achieves the age of majority in his state.

2. A completed Minor's Assumption of Risk Acknowledgment.

2. COMPETITION LICENSES

2.1. Medical Requirements

A. Everyone who applies for an SCCA Competition License or Permit must submit a completed SCCA Physician's Examination and Medical History Form *or a NASA approved medical form. For the purposes of SCCA competition licensing, the term "form" refers to either version*. The form must be submitted every 5 years for applicants ages 15-39; every 3 years for applicants ages 40-49; every 2 years for applicants ages 50-59; and every year for applicants age 60 and over. The examination date cannot be more than 3 months before the Competition License or Permit application date. A new Form is not required for a 15 year-old Novice Permit holder or Novice Permit holder applying for a Regional or National License, provided the current Form is within the specified term for his age group. The form remains valid *for an SCCA license* only when a member maintains continuous SCCA membership and permit or license.

B. An individual may be issued a Novice Permit by a Divisional or Regional Licensing Chairman provided there is no medical condition identified on the Form which requires review by the Medical Advisory Board.

C. *SCCA Physician's Examination and Medical History Forms* are available from Regions, from the National Office, and on SCCA's web site, www.scca.com.

D. Many medical conditions affect a competitor's fitness. Certain conditions will be automatically reviewed by the Club Racing Medical Director and the Medical Review Board to determine whether a competitor should be issued a license. Specific medical conditions that preclude issuing a license are varied and change with improving medical treatments. The medical reasons for denying a license will be explained to the applicant. Actions of the Medical Review Board are final and are not subject to protest.

E. A competitor who is issued a license under medical waiver must submit the Form annually.

2.2. Credit Toward License

A. To qualify for renewing or upgrading a license, a competitor must participate in the minimum number of SCCA races specified in *Table 1*. However, no license credit shall be given for the following:

1. Drivers Schools
2. Races held as part of a Drivers School
3. Events not sanctioned by the SCCA
4. Events resulting in a DNS or DNF

B. A licensed competitor may enter multiple cars in an event, but will earn license credit for only one entry for each race group per sanction number. A Novice Permit holder will earn license credit for only one race for each sanction number.

2.3. Competition Licensing Requirements

*Table 1*below shows the standard licensing requirements and progres-

sions.

2.4. Additional Licensing Information

A. All 15 Year-Old Novice Permit, Novice Permit and License applications must be signed by the applicant and sent, along with all required paperwork and fees to the following address:

Sports Car Club of America, Inc.

Competition License

6700 SW Topeka Blvd., Building 300

Topeka KS 66619

B. An applicant for any Permit or License who requests expedited processing must add an additional $125 to the license fee shown *in Table 1*. The special handling fee guarantees a 24 hour business day turn-around and the License is returned via Federal Express.

C. License Renewal/Upgrade Forms are mailed automatically to Regional, Vintage, and National License holders in advance of the expiration of the current License.

D. An applicant's Divisional Driver Licensing Administrator, or the National Administrator of Driver Licensing, or the Club Racing Department may waive some or all of the participation requirements for issuing or renewing a Regional, Vintage, or National License. Anyone not meeting the participation requirements for Regional, Vintage, or National License (upgrade or renewal) is advised to contact one of these sources to request a waiver.

E. In addition to the basic items for each license level and upgrade in the *Table 1*, please note the following sections, particularly with respect to licensing Minors.

2.5. Licensing Minors

A. The SCCA defines a Minor as an individual between 15 years and the age of majority as determined by the law in the state of the individual's residence (typically 18 years old, but it may vary).

B. *With the approval of the Divisional Licensing Administrator, only the Club Racing Office may issue a Novice Permit to a minor.* In addition to the paperwork and fees indicated *in Table 2*, a Minor applicant must submit the following to the Club Racing Office:

1. A completed Parental Consent, Release and Waiver of Liability, Assumption of Risk and Indemnity Agreement. This document must be filed annually until the Minor achieves the age of majority in his state.

2. A completed Minor's Assumption of Risk Acknowledgment.

3. A photocopy of both sides of his State Operator's Permit/ Drivers License.

C. Only the Club Racing Department may waive Drivers' School, Regional, Vintage, or National License participation requirements for a Minor.

2.6. 15 Year-Old Novice Permits

A 15 Year-Old Novice Permit is a provisional license for young drivers with previous racing experience in karts, quarter-midgets, etc.

A. Applicants with prior racing experience in karts, quarter-midgets, etc., will be considered for a 15 Year-Old Novice Permit. Applicants must submit a resume of their prior racing experience that will be

evaluated by their Divisional Driver Licensing Administrator. If the Divisional Driver Licensing Administrator is satisfied with the applicant's experience, he will schedule an interview with the applicant to complete the evaluation. It is preferred that the interview be in person, but if necessary, a telephone interview is acceptable. If the Divisional Licensing Administrator judges that the applicant's experience and maturity is satisfactory, he will recommend to the Club Racing Office that a 15 Year-Old Novice Permit be issued. A completed Parental Consent, Release and Waiver of Liability, Assumption of Risk and Indemnity Agreement and a completed Minor's Assumption of Risk Acknowledgment must be submitted to the Club Racing Office. *A Novice Permit applicant who does not meet the requirement of Appendix C.2.5.B.3 may apply to the Divisional Driver Licensing Administrator as in Appendix C.2.6.A*.

B. A 15 Year-Old Novice Permit will be issued in the form of a Novice Permit with a distinctive cover. It must be used for all driver school and *regional* race events until the driver reaches the age of 16. *If the requirements for a National License are satisfied before the permit holder turns 16, the 15 Year-Old Novice Permit shall be returned to the Club Racing Office, with the appropriate license fee, to be replaced by a National license.* If the requirements for a regional license are not fulfilled by the time the driver reaches the age of 16, the 15 Year-Old Novice Permit shall be returned to the Club Racing Office to be replaced by a Novice Permit. Any successfully completed Driver Schools and races will be transferred to the Novice Permit.

C. 15 Year-Old Novice Permits may be issued only by the Club Racing Office.

D. At every driver school and every race, the permit must be presented to the Chief Steward before participating in any on-track session. The Chief Steward will complete the appropriate permit page at the end of the event.

E. At any event (school or race), the Chief Steward may recommend revocation of the permit.

F. In addition to the successful completion of the required driver school(s), the Chief Steward must explicitly state that the driver is prepared to race; otherwise, additional school(s) are required.

G. A 15 year-old must complete his first SCCA driver school in a car from one of the following classes: FV, FST, FF, SRF, SM, HP, T3, SSB, SSC, ITA, ITB or ITC. Upon successful completion of the first school, any car may be used thereafter*, or a regional-only class car of similar performance as determined by the Chief Steward*.

H. No 15 year-old will be allowed to race without having successfully completed at least one SCCA driver school. In Divisions in which SCCA driver schools are not available, the student may be allowed to race after completing two SCCA Accredited Schools subject to the approval of the Divisional Driver Licensing Administrator.

I. The 15 Year-Old Novice Permit is treated as a Novice Permit for the purposes of licensing while participating in Driver Schools and Regional races.

2.7. Novice Permit

A Novice Permit is a training license for student drivers as they develop the experience necessary to safely race with the SCCA.

A. After submitting the required materials, an applicant will receive

his Novice Permit with one photo attached. The Permit must be presented at Drivers School and subsequent SCCA races until replaced by a Competition License. *A Novice Permit applicant who does not meet the requirement of Appendix C.2.5.B.3 may apply to the Divisional Driver Licensing Administrator as in Appendix C.2.6.A.*

B. A Novice Permit is valid for 24 months with continuous SCCA membership. However, Novice Permit holders over age 60 and those requiring a medical waiver must submit the Medical Form annually for the Permit to remain in effect.

C. A Novice Permit holder who does not complete requirements to upgrade to a Regional or Vintage License by the expiration date of the Permit must start over with no credit for previous schools or races.

D. Successful completion of 2 SCCA Drivers Schools or their equivalent is required before a Novice Permit holder may race. The following must be noted in the Novice Permit:

1. A total of at least 6 hours of in-car, on-course time.
2. A Satisfactory rating in at least 2 SCCA Drivers Schools.
3. The Signature of the Chief Steward indicating participation in each School attended.

E. Novice Permit holders may offer equivalencies to replace one or both SCCA Drivers Schools.

1. The Chief Steward of an SCCA Drivers School or the Novice Permit holder's Divisional Licensing Chairman may waive all or part of the Drivers School requirements for drivers with prior racing experience.
2. The Chief Steward of an SCCA Drivers' School, the Novice Permit holder's Divisional Licensing Chairman, or the Club Racing Department may give credit for one SCCA School to a driver who submits evidence of having successfully finished an SCCA accredited private drivers' school after that driver has completed 3 hours of in-car, on-course time in SCCA Drivers School.
3. The Chief Steward of an SCCA Drivers' School, the Novice Permit holder's Divisional Licensing Chairman, or the Club Racing Department may give credit for two SCCA Schools to a driver who submits evidence of having successfully completed two SCCA accredited private drivers' schools.
4. Club Racing will publish the list of accredited private schools whose curricula and methods have been approved and who have submitted a service fee to the SCCA.

F. Drivers who have fulfilled the Drivers School requirements complete the Novice Permit by successfully competing in two Regional races within the 2 year term of the Permit. The Chief Steward for each race must sign the Permit to indicate participation.

When the second Regional Race is credited, the Chief Steward or Chairman SOM for that event must also sign the Permit acknowledging completion of the Novice Permit requirements. If the Chief or Chairman will not sign the Permit, a Novice Permit holder may appeal that decision to his Divisional Licensing Chairman for a final decision.

G. A Novice Permit may be revoked by the holder's Divisional Licensing Chairman upon the recommendation of the event Chief Steward.

2.8. Regional License

A. A driver who has completed all Novice Permit requirements, including the acknowledgment signature of the Chief Steward or Chairman SOM, may follow the directions in the Permit to apply for an upgrade to a Regional License. For the three consecutive weekends after he has submitted his Regional License application to the National Office for processing, he may use a photocopy of the Permit as a License to race. Or he may retain the original Novice Permit to use as a License until he completes 4 Regional Races (beyond the initial 2 for the Novice Permit requirement) to earn a National License.

B. *Licenses listed in 3.1.5.C. will be accepted as equivalent to a SCCA regional competition license at SCCA regional events if the requirements of Appendix C.2.1 are met.*

2.9. National License

A. A Regional License holder who completes requirements for a National License or who receives a waiver from his Divisional Licensing Chairman during the Regional portion of a Regional/National weekend needs only the permission of the event Chief Steward to enter the National race. Drivers competing on a 15 Year-Old Novice Permit may not be upgraded to a National license under these circumstances.

B. A Canadian resident holding a current ASN Professional Grade C License or higher may apply for an SCCA National License if he is an Individual, Family, Spouse, or First Gear SCCA member in good standing and submits a copy of his current ASN License and ASN Medical Form, along with the License fee.

3. CREW LICENSES

3.1. Licensing Requirements

A. Only SCCA members may be licensed.

B. All non-Minor SCCA members will automatically be licensed as Crew.

C. Licenses are for one year, concurrent with the membership term.

D. There is no participation requirement for renewal.

3.2. Licensing Minors as Crew

A. The SCCA defines a Minor as an individual between 15 years and the age of majority as determined by the law in the state of the individual's residence (typically 18 years old, but it may vary). A Minor may apply for an SCCA Crew License.

B. Only the National Office may issue a Crew License to a Minor. In addition to the Crew License Application, a Minor applicant must submit the following to the National Office:

1. A completed Parental Consent, Release and Waiver of Liability, Assumption of Risk and Indemnity Agreement. This document must be filed annually until the Minor achieves the age of majority in his state.

2. A completed Minor's Assumption of Risk Acknowledgment.

4. NON-STANDARD LICENSE SITUATIONS

A. Probation Letter as License

1. The Chairman SOM or other review committee or Court of Appeals issues a Probation Letter to temporarily replace the confiscated License of a member whose penalty is probation.
2. The member uses the Probation Letter as a License until the terms of the probation have been met completely.
3. When the terms are completed, the member sends the Probation Letter to the National Office and receives his License in return.

B. Statement of Facts Affidavit in Lieu of License

A Statement of Facts Affidavit is available ONLY to a competitor who has received a current SCCA Competition License but does not have it in his possession at the event. A competitor whose claim to have been issued an SCCA Competition License cannot be verified is subject to automatic penalty, as specified in 7.4.D.

Notes:

Table 1

LICENSE LEVEL	SCCA MEMBER TYPE	AGE	WHO MAY ISSUE THE LICENSE	APPLICATION	MEDICAL FORM	FEE	GCR	TERM	OTHER
15 YEAR-OLD NOVICE PERMIT	Individual/ Family/ First Gear in good standing	15 years old	National Office Only	Novice Permit Application	Required	$110 (Region retains $40)	Included	2 years	2 Passport Photos or Proof of Age + Divisional Licensing Chairman Approval
NOVICE PERMIT	Individual/ Family/ Spouse/ First Gear in good standing	16 years or older	National Office or National/ Divisional/ Regional Driver Licensing Administrator	Novice Permit Application	Required	$110 (Region retains $40)	Included	2 years	2 Passport Photos + Proof of Age + Operator's Permit/ State Driver's License allowing solo motor vehicle operation
NOVICE TO REGIONAL	Same as Above	Same as Above	National Office	Completed Novice Permit + Regional License Application	When needed	$80	Included	1 year	Complete School Requirements + 2 Regional Races on Permit + Appropriate Officials' Signatures on Permit
NOVICE TO VINTAGE	Same as Above	Same as Above	Same as Above	Completed Novice Permit + Vintage License Application	When needed	$55	Not Included	1 year	Complete School Requirements + 2 Regional Races on Permit + Appropriate Officials' Signatures on Permit

NOVICE TO NATIONAL	Same as Above	Same as Above	Same as Above	Completed Novice Permit + National License Application	When needed	$90	Included	2 years	Complete School Requirements + 2 Regional Races on Permit + Results of 4 Additional Regional Races. All in prior 24 months.
REGIONAL RENEWAL	Same as Above	Same as Above	Same as Above	Regional License Renewal Application	When needed	$80	Included	1 year	Results of 2 Regional Races or 2 Vintage Races from the prior 12 months
VINTAGE RENEWAL	Same as Above	Same as Above	Same as Above	Vintage License Renewal Application	When needed	$55	Not Included	1 year	Results of 2 Vintage Races or 2 SCCA Regional Races from the prior 12 months
REGIONAL TO NATIONAL	Same as Above	Same as Above	Same as Above	National License Application	When needed	$90	Included	1 year	Results of 4 Regional Races from the prior 12 months on a Regional License
NATIONAL RENEWAL	Same as Above	Same as Above	Same as Above	National License Renewal Application	When needed	$90	Included	1 year	Results of 3 SCCA National/Pro/FIA events or 2 SCCA National/Pro/FIA events + 1 Regional Races or 4 Regional Races

APPENDIX D. DUTIES, AUTHORITIES, AND RESPONSIBILITIES OF THE CHIEF STEWARD

This Appendix summarizes the duties, authorities and responsibilities of the Chief Steward in the GCR, except those in 5.12., the primary section governing the powers and responsibilities of Stewards. This Appendix is a digest and is intended to direct the reader to the appropriate specific sections for the full citation. Because these are summaries only, the statements in this Appendix may not be protested or appealed.

2.1.6. Refusing to cooperate with, interfering with, or obstructing the CS is a breach of the rules.

2.2.4. The CS may have no conflict of interest as defined in this section.

2.3.1.B. The CS may exclude any participant using narcotics or dangerous drugs, may have that person removed from the grounds, and may cause that person to be penalized.

3.1.7.C. The CS may allow a driver holding a competition license from the SCCA or any organization listed in 3.1.5.C. to enter an SCCA Drivers' School.

3.1.8.C. The CS for a Vintage/Historic race establishes standards for car prep, classes (if any), and driver conduct. These will be published in the Supplemental Regulations.

3.1.9.E. A CS is required for an SCCA sanctioned Practice Day.

3.5.1.H. The name of the CS must appear in the Supplemental Regulations.

3.6.2. The CS must delay an event until he is satisfied that the required insurance is provided.

3.6.4. The CS must approve scaffolding in consultation with SCCA Risk Management.

5.1. The CS is listed among the principal officials.

5.1.1. There shall be a CS at every event.

5.1.2.B. The CS for a National Race will be appointed by the Chairman of the Stewards' Program.

5.1.3. Grades of Licenses for CS

A. Nationals – National Steward.

B. Regionals – minimum Divisional Steward.

C. Drivers' Schools – National Steward.

D. Practice Days – minimum Divisional Steward.

5.1.5. The Chief Steward shall have no plurality of duties.

5.2.1.A. With the Race Chairman, the organizer, and the promoter, the CS determines the schedule, and drafts the Supplemental Regulations.

5.2.1.C. The CS must receive a copy of the Insurance Certificate prior to beginning the event.

5.3. The CS, the ACS – Safety, and the Chief of Emergency Services oversee the activities of the Course Marshal.

5.4.4.C. The CS authorizes dispatching emergency vehicles. The CS, F&C Chief, Chief of ES, and ACS-Safety agree on dispatch procedures.

5.4.4.H. The CS must specifically approve counter-race towing.

5.5.2. There must be immediate communications among the CS, Race Control, and the corner stations.

5.5.3.B. Descriptions of course and car conditions, and on-track situations will be conveyed to the CS via the communications network.

5.5.2. Information and instructions from the CS to the on-track emergency vehicles, the corners, and the drivers will be conveyed via the communications network, and racing suspended if communication is interrupted.

5.8.2. The CS oversees the activities of the Starter.

5.8.3. The Starter controls the field by conveying CS orders while the cars are on course.

5.8.4. The Starter and the CS must have immediate communication with one another.

5.9.1.B. The CS may request that the Chief of Tech conduct inspections; the Chief of Tech may recommend inspections to the CS.

5.9.1.C. The Chief of Tech will report non-conforming cars to the CS.

5.9.2.C. The CS may request re-inspection of any car (beyond the Annual), and may request special impounds.

5.9.3.C. The CS may require impounding cars post-race beyond the top three finishers. The CS may penalize drivers who fail to report to impound with their cars. The CS and the Chief of Tech determine items to be checked. Underweight cars will be reported to the CS. Cars of doubtful compliance will be reported to the CS.

5.9.3.D. The CS may waive a competitor's post-race impound at non-National events prior to the race in the presence of the Chief of Tech.

5.10.1.B. T&S will provide times and results at the request of the CS.

5.10.3.C. The CS may waive the two-system T&S requirement when there is insufficient staff. T&S protests will not be accepted.

5.11.1. The CS may assign Driver Observers on course, whose activities are overseen by the CS, and to whom they report in writing regarding all incidents or accidents witnessed.

5.11.3.A. The CS may assign Start, Finish, and Judges of Fact who shall report directly to the CS.

5.12.4. The CS may delegate all or part of his or her powers under 5.12.2.C, and 8.1.2. to the Compliance Checking Crew, who are responsible to advise the CS of non-compliant cars.

6.1.2.F. The CS or the Supplemental Regulations will define where a car stops in the pits upon receiving an Open Black Flag with a number board.

6.1.2.F. The CS will direct the Black Flag "ALL" procedure when needed.

6.1.2.G. The CS or the Supplemental Regulations will define where a car stops in the pits upon receiving a Mechanical Black Flag with a number board.

6.1.2.I. The CS will direct the Red Flag procedure when needed.

6.2.2. The CS or the Supplemental Regulations must approve a car returning to the course from the paddock during a race.

6.3.3. The CS or the Supplemental Regulations must approve fueling in the pits.

6.3.5. The CS or the Supplemental Regulations must approve more than 4 hot pit crew.

6.4.2.E. The CS may waive the 120% qualifying rule, and may allow non-qualifiers to grid behind qualifiers.

6.4.3.C. The CS may recommend the parallel column procedure to establish the grid when conditions merit for oversubscribed classes.

6.4.6. The CS or the Supplemental Regulations must approve fueling on the grid.

6.5.1.A. The CS initiates the 5 and 1 minute warnings to the grid.

6.5.1.D. The CS may authorize a second unscored pace lap.

6.5.1.K. The CS may direct the Starter or someone else to brief the front row prior to a race.

6.5.2.B. The CS will determine the class(es) in each segment of a split start.

6.5.3. After the field has left the grid, the CS may allow cars not in position at the 1 minute warning to join the field at the back during the pace lap or from the pit exit after the green.

6.6.1. The CS is responsible for the pace cars, and will approve the driver and communicator/observer.

6.6.2. The CS may use a safety car to control the field and restarts.

6.7.1. The CS may stop a session in any of the following ways:

A. Black Flag “ALL”

B. Red flag

D. Checkered Flag, if at least 50% of a race scheduled time or distance has been completed

6.8. The CS may restart a race in one of the following ways:

A. Restart in original grid positions.

B. Single file restart by the last completely scored lap.

6.9. The CS may use the Black Flag “ALL” procedure to stop a race less than 50% complete to give competitors 15 minutes to change to rain tires (at their discretion); or if it is more than 50% complete, he may checker the race.

6.11.4. The CS must approve counter-race driving.

7.2.F. The CS must receive notification from any driver on probation before that driver enters the course the first time.

7.4.B. Penalties imposed by the CS do not incur automatic penalty

points, but the SOM may assign points when a CSA is protested and is upheld.

8.1.1. The CS may file a Chief Steward's Action describing a breach and the action taken. All CSAs must be filed within 30 minutes after the results of the final race are posted, unless the SOM approve an extension.

8.1.2. The CS may file a Request for Action with the SOM describing a breach, but he may not file an RFA for a single breach for which he has already imposed a penalty. Unless the SOM approve an extension, RFAs must be filed within 30 minutes after the results of the final race are posted, except RFAs resulting from post-race impound.

8.1.3. The CS may file a CSA or an RFA against a car for non-compliance. The procedures are the same as for a mechanical protest.

8.3.1.E. The CS shall receive protests and shall promptly forward them to the Chairman SOM.

8.3.3.B. Items beyond the scope of a mechanical protest found non-compliant during the inspection must be forwarded to the CS.

8.4.1. The CS may appeal any decision or penalty imposed by the SOM.

8.4.3.B.2. The CS must receive the competition license and forward it to the national office before an appeal will be heard.

8.4.5.C. The Court of Appeals will not act as a CS.

9.1.11.B. The CS approves the classification of cars; and will not approve if the proposed classification poses a safety hazard or an impediment to fair competition.

9.2.1.H. The CS may waive deviations compliance requirements for a car for an event.

9.3.20.B. The CS approves reinspection of driver's safety equipment.

9.2.26.A. The CS or SOM will assess appropriate penalties when fuel is tested non-compliant.

9.3.32. The CS may direct that the taillight on formula or sports racers be illuminated.

AppC.2.7.D.3. The CS signs Novice Permits attesting to participation in SCCA Drivers' Schools.

AppC.2.7.E.1. The CS of a Drivers' School may waive all or part of the school requirements for drivers with prior racing experience.

AppC.2.7.E.2. The CS of an SCCA Drivers' School may accept 1 private school in lieu of one SCCA school, upon completion of 3 hours of in-car on course time in SCCA school.

AppC.2.7.E.3. The CS of an SCCA Drivers' School may accept *2* private schools in lieu of both SCCA schools.

AppC.2.7.F. The CS of an SCCA Drivers' School may accept 2 private schools in lieu of both SCCA schools. The CS (or the SOM) refusing to sign off a Novice Permit may be appealed to the driver's Divisional Licensing Chairman.

AppC.2.7.G. The CS may recommend to the driver's Divisional Licensing Chairman that his Novice Permit be revoked.

AppC.2.8.A. The CS (or the Chair SOM) signs off the Novice Permit following completion of the second satisfactory Regional race.

AppC.2.9.A. The CS may approve entry in the National portion of a Regional/National race weekend for a driver completing license upgrade requirements during the Regional portion or receiving a waiver from the driver's Divisional Licensing Chairman.

AppE.5.4.B. The CS determines the order of single car qualifying at an oval event.

AppE.5.5.A.2. The CS announces the number of pace laps before the start of an oval race.

AppE.5.5.B.2. The CS may use a safety car at an oval race, or may designate the lead car to pace the field safely to a restart or to slow the field for the safety car.

AppF.Qualifier (a) One who receives a time, or (b) One who is waived into a race by the Chief Steward and starts the race.

Notes:

APPENDIX E. OVAL TRACK RACING

This section is intended as a guideline and recommendation for SCCA Club Racing events conducted entirely on paved oval tracks.

1. EVENTS

Club Racing Oval Events will be sanctioned only on paved ovals and only as Regional or Restricted Regional events. National Races may not be conducted as Oval Events. A Drivers' School may be conducted as an Oval Event, but not as a substitute for a road course drivers' school. Regions conducting Oval Drivers' Schools are encouraged to seek out local drivers who have experience at that track to advise students at the Oval Drivers' School.

All items of Section 3., Events, which apply to Regional or Restricted Regional events shall apply to Oval Events.

Depending on the length and banking of the oval course being used, it is recommended that regions consider restricting the faster classes (GT1, FA, and CSR) from competition at Oval Events.

Oval Events may consist of any combination of practice sessions, qualifying sessions, heat races, and feature races. On tracks of less than 1 mile in length, it is recommended that qualifying be conducted one car at a time.

2. COURSES

Courses for Oval Events must be approved by the Divisional Executive Steward prior to applying for a race sanction. These approvals shall expire at the end of the calendar year or upon written notification to the region by the Executive Steward which ever comes first.

3. TIMING AND SCORING

Timing and Scoring standards may be modified in favor of short-track scoring techniques. It is not necessary to time every lap of every car during a race, though an overall time for the winner should be recorded.

4. FLAGGING AND COMMUNICATIONS

Generally, all communications with drivers while they are on course will be via flags at the Starter's Stand and/or signal lights around the course. It is recommended that Flagging and Communications personnel be stationed around the course to communicate to Race Control the observations they make regarding the condition of the course or the nature of any incidents they witness.

5. RULES OF THE ROAD

5.1. Racing Surface

For the conduct of all competitions (qualifying or race), the racing surface shall be defined as only the marked, paved race track and it's curbing. Pit lanes, their entries and exits; grass verges; and so on, are expressly excluded from the racing surface.

5.2. Flags

For Oval Events, flags will normally be only displayed at the Starter's Stand. Flags may be supplemented by signal lights displayed around the course. The flags used in an Oval Event are defined in Section 6.1.2., Flags, with the following exceptions:

A. RED FLAG – Come to a stop as soon as possible on driver's left (for counterclockwise tracks) or driver's right (for clockwise tracks). Then proceed very slowly and with great caution to the hot pit area

and await further instructions.

B. Yellow Flag and/or Yellow Light

STANDING YELLOW — Take care, Danger, Slow Down, NO PASSING. The entire course is yellow.

WAVED — Great Danger, Slow Down, be prepared to stop. NO PASSING. The entire course is yellow.

DOUBLE YELLOW – Not used.

C. SURFACE CONDITION FLAG (Yellow with Vertical Red Stripes) – Not used. Any course condition warranting a surface condition flag is cause a yellow flag until the course condition can be corrected.

D. WHITE FLAG (Solid White) – The leader is starting his last lap. The white flag shall be waved to the leader and then to each following car during that lap.

5.3. Practice / Multi-Car Qualifying

A. During practice and multi-car qualifying sessions, all cars enter the pit area and stop at their pit at the first opportunity after observing a yellow flag or yellow light at any flag or light station on the track. No car may re-enter the track from the pit lane until the course becomes green again.

B. The scheduled practice time is total running clock time, not on-track green flag time, subject to event scheduling requirements.

5.4. Single-Car Qualifying

A. The number of warm-up laps, timed laps, and cool-down laps allowed in a qualifying session will be defined in the supplementary regulations and/or announced at the drivers meeting.

B. Cars will qualify in an order determined by the Chief Steward. If a random drawing is used to determine qualifying order, details of the drawing will be announced prior to the drawing. Positions in the qualifying order are reserved as long as the car is in the qualifying line prior to the order to begin its qualifying attempt.

C. If a car does not proceed with the qualification attempt when ordered to do so, the qualifying order position will be forfeited. The car may be penalized further by the loss of one qualifying lap.

D. A qualifying attempt shall be considered started when the front tires of the car cross the starting line after the qualifying start signal is given by the Starter.

E. If the car stops anywhere on the course after the qualifying start signal is given by the Starter, the driver will be charged with an attempt. Time permitting, those cars having started a qualifying attempt, but unable to complete the attempt, will be permitted to begin a second qualifying attempt. First priority for a second qualifying attempt will go to cars that failed to receive any qualifying time during their first attempt.

F. In the event qualification cannot be held or completed within the allotted qualification time, the field, or remaining field, will be filled by means of a seeded lottery by those drivers who have entered, but who have not qualified.

5.5. Races

A. Initial Race Start

1. A pace car may or may not be used. If no pace car is used, the

responsibility of pacing the field will fall to the pole car.

2. The number of pace laps prior to the start of the race will be announced by the Chief Steward.

3. On the final pace lap prior to start, the pace car, if used, will turn its lights out and accelerate to leave track.

4. The pole car will bring the field gradually up to speed for possible start.

5. Cars shall not improve position prior to crossing start/finish line. (Pulling out of line alongside the car in front of you is improving your position.)

6. In case of an aborted start, the starter will display a standing green flag to the field. After the cars have entered turn one, the course will go yellow and the field will reform on the back straight for a restart.

B. Yellow Light/Flag.

1. In the event of a yellow flag, the lead car is responsible for controlling the field and getting the field to slow down in a smooth, orderly fashion.

2. A pace or safety car may be employed to bring the field under control. Whenever a pace car is used, it will remain out for a minimum of two laps subject to race conditions and at the discretion of the Chief Steward. The Chief Steward may designate to the lead car the duties of pace car to safely pace the field to a restart or to slow the field down gradually prior to a safety car entering the track.

3. In case of a pass in progress when the yellow light goes on, the over-taking car is expected to fall back and take station behind the car he was attempting to pass. The field does not race to the start/finish line.

4. The running order as of the last completed green flag lap immediately prior to the yellow flag shall determine the running order for the re-start.

5. Any yellow light or flag at an oval track is a full course yellow, whether or not there is a safety car. The lead car will slow the field down to permit the entire field to “bunch up” single file behind the leader. The track will stay yellow until the field is consolidated behind the leader. Drivers strung out around the track are expected to quickly move up to catch “the pack” while observing the yellow flag situation.

6. Cars entering the pits during a yellow flag condition, or cars responsible for causing the yellow flag condition, shall, assume a position at the rear of the formed pack on rejoining the field.

C. Restarts

1. On the lap prior to a possible yellow-to-green restart, the field will be notified of a possible restart on the next lap by:

   a. Safety car turning lights off and exiting the track.

   b. If no safety car is used, Starter indicating one more lap.

2. In either case, the lead car gradually brings the field up to speed for a possible restart.

3. At the instant the starter waves the green flag, all yellow lights will go green. Racing resumes immediately over the entire track.

5.6. Driving Conduct

A. It is the responsibility of all drivers to avoid physical contact between cars on the race track.

B. All competitors have a right to “racing room” on the marked racing surface. “Racing room” shall be generally defined as sufficient space on the marked racing surface so as to allow a competitor to maintain control of his car in close quarters, under racing conditions.

C. It shall be incumbent on all drivers to preserve the right of his fellow competitors to “racing room” on the race track. Abrupt changes in direction so as to impede or affect the path of a car attempting to overtake or pass may be interpreted by Officials as an attempt to deprive a fellow competitor of his right to “racing room”.

APPENDIX F. TECHNICAL GLOSSARY

NOTE: Should any of the definitions contained in this Glossary appear to be in conflict with a specific rule, then the GCR or Specification Book will take precedence.

2 Cycle – A reciprocating engine in which the intake, compression, combustion and exhaust phases are completed each revolution of the crankshaft.

4 Cycle – A reciprocating engine in which the intake, compression, combustion and exhaust phases are completed each two revolutions of the crankshaft.

A-Pillar – The forward most roof support in a passenger car, which also serves as the side support for the windshield.

Accelerator Pedal – A foot-operated device which allows the driver to vary the degree of opening of the induction system throttle(s).

Accessible – Capable of being reached without removal of other components.

Accumulator – A pressurized free-piston device, in which the compression of a fixed volume of air by the piston, upon the application of a force caused by fluid under pressure, provides a pressurized reservoir of the fluid.

Active Aerodynamic Devices *– No active aerodynamic devices are permitted. These include, but are not limited to, those that allow any degree of freedom in relation to the entirely sprung part of the car (chassis/monocoque), movable or hinged skirts, or that can be adjusted from within the cockpit. Adjustment of aerodynamic devices may only be made by mechanical changes performed from outside the car.*

Active Suspension – Automatic ride height and / or roll control by an active system receiving power from a pump or compressor.

Addition – To introduce a component not present in the cars stock state, or attachment to an existing component.

Adhesive – A bonding agent designed to cause two or more components to adhere to each other without fusing them into a single component.

Adjustable Timing Gear – A camshaft drive gear or sprocket which permits a range of angular adjustment of the outer portion relative to the attachment point of the driven camshaft.

Advance Curve – The degrees of distributor advance from the static setting as a function of rotational speed, usually achieved by mechanical or electronic means.

Advance Plate – The plate inside a distributor on which the ignition points are mounted, which is free to rotate over a prescribed angle in response to the actions of the advance mechanism(s), thus altering the phase relationship of the points and distributor cam.

Advance Springs – Springs which provide the restoring force against the actions of the advance mechanism(s) in a distributor.

Aerodynamic Device – An attachment to, or an integral part of, a car intended to generate atmospheric downforce by the action of air flowing through or around the attachment.

Aerodynamic Skirts – Body panels, movable or fixed, at the bottom of the sides of a car's body, which aid in the creation of "ground effects"

downforce by ensuring that little air passing under the car can escape at the sides.

Aeroquip Line – A brand name, used generically, for a braided metal-covered hose.

Air Cleaner – An induction system component intended to filter particulate matter from the incoming air.

Air Dam – An air control device at the lower front of a car, intended to divert some of the air which would normally pass under the car when the car is in motion.

Air Horn – See Velocity Stack.

Air Pump – An engine-driven pump intended to provide a supply of air (without fuel) to the engine to assist in the reduction of pollution components.

Air Throttle – The valve which allows the driver to modulate the volume of air passing into a fuel injection induction system.

Airfoil – An aerodynamic device or part of a car which the flow of air over its surface will generate a vertical force by creating a pressure differential between top and bottom surfaces.

Air Throttle/Throttle Body – The component which allows the driver to regulate the volume of air passing into a fuel injection induction system.

Alloy – A homogeneous mixture of two or more elements, at least one of which is a metal, and where the resulting material has metallic properties.

Alter (verb) – To change a component by modifying.

Alternator – A component intended to generate current with which to maintain a proper level of charge in the on-board storage battery.

AN Coupler – A threaded high pressure hydraulic coupling of the type normally used with metal braided hose.

Annular Discharge – A carburetor type in which the fuel is introduced into the flowing air from an annulus on the periphery of the main duct.

Anti-Roll Bar (Sway bar) – A torsion control device connected to a car's structure, and to moving portions of the suspension, which is intended to control body roll. (Some types of ARB may also serve as a suspension component.)

Anti-Submarine Strap – A safety strap intended to provide additional support against motions of the driver's lower torso in the forward direction.

Aspect Ratio – The ratio of tire section height to section width, expressed as a percentage.

Attachment Points (Suspension) – The locations at which the fixed and moving ends of a shock absorber are mounted and/or the location of the suspension component on the frame or structure of a car.

Automatic Transmission – A transmission which is capable of allowing a car to start from a stop without use of a clutch, which may be shifted from gear to gear without use of a clutch, and in which such shifting of gears is accomplished by hydraulic, pneumatic, or electric actuation.

Automobile – See Car, Appendix A.

Axle Housing – The housing which contains axle shafts and may provide support for wheel hubs.

Axle Shaft – A shaft whose purpose is to carry rotational drive from a

differential or transaxle to the driven wheels, or simply to support 1 or 2 undriven wheel hub(s).

Axle Tube – See Axle Housing. Also, the beam connecting the rear wheels on a front wheel drive car.

Backing Plate – A braking component used in drum type brake systems, generally to support the brake shoes and wheel cylinder(s) at a wheel.

Baffle – A plate or panel in a fluid container, which is designed to inhibit the rapid transfer of the fluid within the container when it is subject to changing dynamic forces.

Balance (Verb) – To minimize the dynamic off-axis forces of rotating components, or to equalize the weights of like reciprocating components.

Balance Pipe – A tubular induction system component which connects 2 or more independent branches of the system.

Ball Joint – A bearing coupling, generally in suspension or steering systems, consisting of 2 mating surfaces, 1 convex and 1 concave, which permits a range of angular displacements of the 2 attached shafts over a prescribed range.

Ballast – Non-functional mass fastened inside a car to increase the weight of the car.

Base Circle – The constant radius portion of a camshaft lobe which is closest to the centerline of the camshaft.

Battery (Storage) – An on-board electrical storage component which may be used to activate electrical devices or systems, such as starter, ignition, etc.

Battery Box – A covered container for an on-board storage battery.

Beam Axle – A solid, non-rotating axle connecting the undriven wheels of a car.

Bearing – A mechanical component provided to allow connected parts to move with respect to one another in a manner consistent with durability and minimal friction.

Bearing Carrier – A housing in which the bearings carrying a shaft are mounted.

Bell Housing – A nominally bell-shaped extension or attachment to the engine or transmission which serves as a coupler between these assemblies, and usually encloses the clutch/flywheel assembly.

Belt Drive (Car) – A drive system in which the engine power is coupled to the driven wheels through a flexible belt and pulleys.

Bezel/Rim – Outer trim components which determine the assembled appearance.

Bias Ply Construction – A tire construction in which the structural plies of the main carcass form an angle considerably greater than zero relative to a cross section of the tire.

Big End – The crankshaft end of a connecting rod.

Blanking Sleeve – A replacement for a thermostat designed to divert the flow of cooling water away from the cooling system bypass circuit.

Block – The elemental component of a reciprocating engine which contains at least the cylinder location(s) and the crankshaft mounting points.

Block Deck Height – The distance between the crankshaft centerline and the machined surface that forms the head/block interface of the block.

Blueprinting – The practice of engine improvement achieved by the use of selected standard parts and/or by optimizing the factory machined surfaces of stock engine components to achieve the most advantageous specifications within the normal range as defined by the manufacturer for that engine.

Within the above definition of blueprinting, any procedures that involve the following are not permitted unless specifically authorized:

a) The addition of material of any kind to any component (this includes, but is not limited to, the addition of sleeves/bushings and the application of anti-friction, oil shedding and thermal barrier/retention coatings).

b) The machining, tooling or any other physical or chemical modification (including shot blasting) of any surface that was not originally a factory machined surface. Glass or other media blasting for cleaning purposes only is allowed as long as it does not remove or modify the base material of the original part.

c) Mixing/matching of parts from any other year, make, model or type of vehicle or engine.

d) Balancing procedures that involve spot machining of all rotating and/or reciprocating parts (i.e. one rod/piston assembly must remain untouched).

Note: Under no circumstances may any factory specification be exceeded as a result of any permitted blueprinting operation(s) (i.e. compression ratio, valve lift, bore, stroke, etc.).

Body – All parts of the car licked by the air stream and situated above the belly / floor with exception of the roll bar or cage. For Formula and Sports Racing cars, further exceptions are those units definitely associated with the function of the engine or transmission.

Body Panel – A replaceable section of the body.

Bodywork – See Body.

Bolt Pattern – The arrangement of bolts or other fasteners used to join 2 components.

Boost – The degree of induction pressurizing in a turbo/supercharged engine.

Boot Cover – A cover for the area behind the driver/passenger seating area in an open car.

Bore – The diameter of a cylinder.

Boss – A protrusion from a casting or forging which provides the surface(s) and/or structure necessary to accomplish particular function of the component.

Brake Light – A signaling light mounted on the rear of the car, which may be actuated only by driver braking actions.

Brake Lining/Pad – Replaceable friction material which accomplishes braking action by making rubbing contact with the brake drum or rotor.

Brake Rotor – The disc component of a braking system, which is attached to a wheel hub and provides a friction surface for braking actions.

Brake Rotor Hat – The integral part of a brake rotor or a separate component that locates and provides attachment for the brake rotor to the hub.

Braking System – A system, including hydraulic and mechanical components, which allows the driver to reduce the velocity of a car.

Breather Vent – An aperture which allows the flow of air into or out of an enclosure.

Bulb – A lighting system component which contains the actual light emitting element(s).

Bulkhead – A partition separating compartments.

Bump Steer – The change in toe-in or toe-out which results from changes in suspension geometry as the wheel(s) rises or falls from its neutral position.

Bump Stop – A cushioning pad which acts as the limit to suspension travel in one vertical direction.

Bumper – A semi-rigid attachment to the structure of a car at the front or rear, which is intended to absorb a portion of low speed front or rear collision forces.

Bumper Block – See Bump Stop.

Bushing/Bush – A sleeve or tubular insert, whose purpose is to reduce the dimension(s) of an existing hole. A protective liner that cushions noise, friction, or movement such as a rod end or spherical bearing.

C-Pillar – The body roof support bordering on the rear window or hatch.

Caliper – A braking system component which is the disc brake equivalent of a wheel cylinder, and converts hydraulic pressure into mechanical braking force at a wheel.

Cam Carrier – That portion of a reciprocating engine that contains the supporting bearings for an overhead camshaft.

Cam Cover – Equivalent to a valve cover in an engine with an overhead cam.

Camber – The angle of a wheel relative to true vertical. Negative camber implies that the top of the wheel is closer than the bottom to the car's centerline.

Camber Compensator – A wheel location device designed to control the wheel camber under varying conditions of bump/rebound.

Camshaft – An engine component, driven by the crankshaft, whose function is to actuate the valves, and often, to drive other engine components.

Camshaft Timing – The phase relationship of the camshaft to the crankshaft, which determines when in the crankshaft cycle the valves will open.

Canard – A near-horizontal aerodynamic device normally mounted at the extreme front of a (race) car.

Carburetor – The component of a non-fuel injection induction system which achieves the mixing of fuel and air to create a combustible mixture.

Car – See Appendix A, Car.

Caster – The angle which the swivel axis of a steered wheel makes with the vertical in the fore/aft direction.

Catalytic Converter – An emissions control device in the exhaust system which reduces emissions by catalysis.

Catch Tank – A container with the purpose of collecting liquid, generally lubricant or coolant, vented from an engine, transmission, transaxle, or differential and preventing the loss, from the car, of the liquid.

cc – Cubic centimeter (a unit of volume).

Center-Lock – A type of road wheel/hub which is retained by a single central fastener.

Centerline – A line coincident with the axis of rotational symmetry of a component.

Centrifugal Clutch – A clutch which automatically engages in response to an increase from low engine speed, and disengages upon return to low speed operation.

Chain Drive – A drive system in which the engine power is transmitted through a chain and sprockets.

Chapman Strut – An adaptation of the McPherson strut for a rear suspension (without steering swivel).

Check Valve – A valve designed to prevent the flow of a fluid in one direction, while allowing relatively unimpeded flow in the opposite direction.

Choke – A carbureted induction system mechanism which, when actuated, causes an enrichment of the fuel/air mixture to assist cold starting.

Clinch Nut – A threaded female fastener which has been distorted on one end to supply a gripping force when assembled to a stud or bolt thread.

Clutch – A device whose function is to permit the driver to engage/disengage a power coupling between the engine and the transmission or transaxle.

CO – Carbon monoxide.

Cockpit – The driver/passenger volume within a car in which driver control devices, gauges, and seating are provided.

Coil – The transformer component of an ignition system which converts each low voltage pulse into a pulse of sufficiently high voltage to bridge the gap in a spark plug and initiate combustion in the engine.

Coil-Over Shock – A tubular shock absorber which contains top and bottom mounting locations for a coaxial coil spring, and is used with such a spring supporting the weight of the car.

Cold Air Box – An engine carburetor attachment of unspecified size and composition, whose purpose is to provide a source of ambient air alternate to that existing in the engine compartment.

Component – A constituent part of an assembly.

Compression Ratio – Reciprocating engines: the ratio of the sum of swept plus unswept volumes to the unswept volume. Rotary engines: the ratio of the largest to the smallest volume of the working chamber.

Compression Ring – A reciprocating engine component which is intended to seal the gap between the piston and cylinder wall against the pressure differential arising from compression, induction or combustion.

Compressor (AC) – The engine-driven pressurizing pump in an automotive air conditioning system.

Concentric – Two components or objects are concentric if they share a common centerline.

Condenser (AC) – The portion of an automotive air conditioning system in which the refrigerant in vapor phase is converted to liquid phase.

Connecting Rod – A component physically connecting a piston to a crankshaft in such a way as to convert the rotary motion of the crankshaft to a reciprocating motion of the piston.

Constant-Velocity Joint – A type of universal joint in which the angular

velocities of input and output shafts are held approximately equal.

Cool Suit – A driver's safety suit which has provision to be cooled by a circulating liquid.

Cooling System – Those components directly associated with the cooling of an engine, including any hoses, fans, pumps, radiators, internal engine passages, galleries, coolant retention components, and coolant entry and exit points, etc.

Cowl Induction – An arrangement in which the incoming air for an induction system is ducted from the cowl area below the windshield.

Crank-Triggered Ignition – An ignition system in which the triggering pulses are obtained from a pickup and wheel connected directly to the crankshaft, or to an intermediate pulley.

Crankshaft – The rotating engine component which, driven by piston/connecting rod assemblies, transmits, for external coupling, the torque resulting from the combustion process.

Crossflow Head – A cylinder head in which the intake and exhaust ports for each cylinder are on opposite sides of the head.

Crown – The top face of a piston at which combustion takes place.

Curvature – The dimension defined by the maximum distance between a curving surface and the straight line between its ends.

Cylinder Liner (Sleeve) – An insert in an engine block which defines the path followed by a piston in its reciprocating motion.

Dash board – See instrument panel.

Decamber (Verb) – To make the wheel camber more negative.

Deck – Generally the rearmost upper body panel of a car, but not present in all cars.

Deck Height – The distance between the top of the piston at its outer edge and the machined surface which forms the head/block interface of the block.

Deck Lid – The access door into the volume (often "trunk") beneath a deck.

Differential – A gear assembly whose purpose is to reduce the rotational velocity transmitted from the engine/gearbox, while providing a division of driving force to 2 wheels.

Differential Housing – The housing in which the differential (final drive) gears are mounted.

Disc Brake – A braking system which relies on the friction between a suitable material in the form of a "pad" and a rotating disc to supply the braking force at a wheel.

Discriminator Valve – A check valve designed to install on the vent line of a fuel cell, allowing vapors to vent while retaining liquid.

Dish – A concave piston crown.

Displacement (Engine) – Reciprocating engine: the swept volume of 1 cylinder times the number of cylinders. Rotary engine: the difference between the largest and smallest volumes of the working chamber, times the number of lobes, times the number of rotors.

Distributor Cap – An ignition system distributor component which contains the high voltage distribution contacts and means for securing the high voltage wires.

Dome – A convex piston crown.

Door Panel – The inner shell of a door which normally supports the trim.

Dowel – A tubular or cylindrical pin, the sole purpose of which is to make positive location of two assembled components possible.

Drive Belt – A continuous flexible reinforced elastomer band which provides the driving force for engine accessories, when attached by pulley to a rotating part of the engine, such as the crankshaft.

Drive Shaft – The mechanical drive train coupling between transmission and differential, which may allow an angular displacement of the driving and driven axes by the use of universal, constant velocity, or flex joints.

Drive Train – Those components in a car which produce and convey the driving power to the ground, and the housings containing these parts.

Dry Break Coupling – An attachment to an on-board fuel cell/tank filler neck/hose which is designed to prevent the spillage of fuel during refueling operations.

Dry Sump – An engine lubrication system in which the residual lubricant is pumped to an external storage tank by a "scavenge pump," and an additional pump or pumps return a supply of pressurized lubricant to the engine from the storage tank.

Dry Tire – A race tire, often with groove-less tread, intended strictly for use in competition under dry conditions.

Dryer (AC) – A component of an automotive air conditioning system which is intended to remove water from the refrigerant.

Duct/Ducting – A tube or enclosed passage for conveying a substance, usually air.

Dust Shield – A cover intended to protect disc brake components from mud, dirt, etc.

Eccentric Shaft – The analog of a crankshaft in a rotary engine, the shaft driven by the actions of the rotor.

EGR Valve – An engine pollution control device which channels a portion of the exhaust gases back into the combustion regions of the engine.

End Plate – An air control panel mounted at each end and perpendicular to a wing, intended to maximize the efficiency of the wing by preventing spillage of flowing air at the ends.

Engine – The primary power plant of a car, including all physically attached ancillary components necessary for power production.

Engine Air Box – An induction system attachment, generally part of the bodywork, which ducts air from an opening protruding into the airstream to the induction system intake(s).

Engine Case – See rotor housing and/or block.

Engine Compartment – The loosely defined volume, nominally enclosed by panels on top and sides, which is the normal location of the engine in a car.

Engine Mount – A passive mechanical coupling used to support the weight of an engine at its attachment points to the structure of a car.

Engine Steady Bar (Torque suppressor) – A constraining beam or rod intended to resist the tendency of an engine to rotate on its mounts in reaction to torque forces.

Epitrocoidal Curve – The contour of the interior surface of a rotary engine

rotor housing, which, with the rotor, determines the volume of the working chambers at any point in the rotation of the rotor.

Equivalent – The same form, fit, function, and dimensions.

Evaporator (AC) – That portion of an automotive air conditioning system in which the transition from liquid phase to vapor phase occurs.

Exhaust Pipe – A duct of unspecified dimensions, whose function is to convey exhaust products toward the rear of a car and away from the driver.

Exhaust Port – The duct within a cylinder head or rotor housing through which the exhaust gases pass from the exhaust valve(s) to the outer flange of the head.

Exhaust System – A passive system, whose components serve to convey the exhaust of an engine past the driver and away from the car.

Expansion Tank – A container, often operating at system pressures, which is designed to contain engine coolant on expansion at operating temperatures.

Extension – An external modification resulting in more material on the outside of the component than originally existed.

Fairing – A covering intended to divert airflow in a specific region of a car, to reduce air drag.

Fan – A rotating bladed device intended to provide a cooling flow of air to a heat exchanger.

Fan Belt – A flexible drive belt which is used to drive a water radiator cooling fan, and, often simultaneously, furnish drive to 1 or more other rotating attachments to the engine.

Fasteners – Any mechanism which serves no other purposes than to cause a component to maintain a fixed position (i.e. bolt, nut, screw, etc.).

Fender – The body panel covering a road wheel assembly.

Fender Flare – An attachment to an existing fender which extends the fender outward so as to more completely cover the tire within.

Fender Skirt – A removable fender extension which partially closes the wheel opening, smoothing the air flow in this region.

Ferrous – An alloy containing more than 50% iron.

Filler Cap – A closure which prevents the loss of fuel from the filler neck/hose when the car is in use, but which may be removed for refueling.

Filler Neck/Hose – The attachment to a fuel cell/tank through which fuel is supplied from a source external to the car.

Final Drive Housing – See Rear Axle Housing.

Final Drive Ratio – The ratio of input to output shaft motions in a final drive or differential.

Fire Extinguisher – An on-board container of specified capacity charged with approved fire extinguishing material which provides the driver or others with the capability to control small fires. See Section 9.3.22.

Fire System – An on-board fire extinguishing system designed to be activated in the event of fire, whose purpose is to extinguish or retard the fire, thus providing a measure of protection for driver and car. See Section 9.3.22.

Firewall – A vertical (plus or minus 10 degrees) metal panel separating and

protecting the driver/passenger compartment from the engine compartment, preventing the passage of flame and debris. Metal ducts may penetrate the firewall, but must begin and end outside of the driver/passenger compartment. No intakes are allowed in the firewall.

Firing Order – The order in which the cylinders in a reciprocating engine produce power under normal conditions.

Flare (Verb) – 1. To extend by extrusion or attachment a fender so as to more completely cover the tire mounted within (Noun) – 2. Extruded end of a pipe or tube.

Flat Bottom – A race car construction in which the underside of the car is nominally flat and contains no "ground effects" shaping or ducting.

Flat Plate Intake Restrictor *– a metal plate through which all engine combustion chamber air (and possibly fuel) must pass. Unless otherwise specified in a category, class or individual engine specification, all flat plate restrictors must meet the following requirements (more than one plate may be required in some applications; each shall meet the requirements):*

- *The restrictor shall be made from flat steel or aluminum sheet at least 0.060 inches thick.*
- *The hole through which all air to the engine must pass shall be round, centered with respect to the throttle body bore or carburetor bore or intake manifold bore to which it is attached; no radiusing, chamfering or beveling of the hole is permitted.*
- *The restrictor plate must be located between the throttle body or carburetor and the engine within 4 inches of the centerline of the carburetor or fuel injection butterfly.*
- *A steel or aluminum spacer no more than 0.75 inch thick may be placed between the throttle body or carburetor and the restrictor to allow for clearance of the butterfly. The hole must be the same shape and size as the throttle body or carburetor flange; no radiusing, chamfering or beveling of the hole is permitted.*
- *The restrictor plate shall be mounted on the bolts or studs used to locate the throttle body or carburetor. There shall be no movement of the restrictor plate possible when mounted.*

Flex Joint – A coupling designed to fulfill the function of a universal joint, but employing flexible materials to achieve changes in the drive axis.

Float – A carburetor component which, with an associated valve, controls the fuel level in the reservoir supplying the carburetor jet(s).

Float Chamber – The carburetor component which contains the reservoir of fuel supplying the jet(s).

Float Valve – The shut off valve actuated by a carburetor float, which controls the maximum level of the fuel in the float chamber.

Floor Pan – The section(s) of a car normally used as a supporting platform for seats and to physically separate the interior (cockpit) area from the underside of the car.

Fluid – Any material which readily flows at the specified temperature, e.g., liquids and gases at room temperature.

Flywheel – An engine attachment whose normal functions are to provide a gear appropriate for starter engagement, to provide a friction drive surface and attachment points for a clutch pressure plate, and to smooth the flow of power.

Frame – The minimal configuration of a car necessary to contain all running gear and to provide support for the body. Not present on "frameless" or "unibody" cars.

Fuel – The chemical mixture which, when mixed with air, is burned in an engine to produce power.

Fuel Cell – A crash-resistant container for the on-board fuel supply of a car.

Fuel Distribution Unit – A fuel injection induction system component which accomplishes the distribution of fuel to the injection nozzles.

Fuel Injection – A system, including mechanical and/or electrical components, whose function is to provide fuel, via pressurized nozzles, to the engine in lieu of carburetion.

Fuel Line – A hose or tube which conveys fuel from one point to another.

Fuel Metering Unit – A component of a fuel injection system which, under external control, determines the quantity of fuel supplied to the engine at any given time.

Fuel Pickup – The attachment to a fuel tank or fuel cell at which point the supply line(s) leading to the fuel pump(s) are attached.

Fuel Pump – A pump, mechanical or electromechanical, whose function is to cause the transport of fuel from the fuel cell or tank to the induction system.

Fuel Tank – A conventional OEM container, not of the safety fuel cell type, for the on-board fuel supply of a car.

Gas Cap – See Filler Cap.

Gasket – A sealing component of unspecified composition which is intended to prevent the leakage of a fluid (air, water, oil, etc.) at the interface between two demountable assemblies.

Gauges – Mechanical or electronic readouts of automotive parameters.

Gear – A toothed drive train component used, in mesh with another gear, for the transmission of rotational force.

Generator – An engine-driven attachment which produces direct current to replenish an on-board storage battery.

Girdle – A component whose purpose is the structural reinforcement of the bottom end of an engine block. It either replaces the main bearing caps with a continuous block of material containing equivalent bearing mounts or it is a continuous block of material that mates with the existing main bearing caps (which may be machined to achieve the mating).

Grille – The decorative covering for the grille opening.

Grille Opening – The opening in the front of a car, through which cooling air is ducted to the radiator(s), and in some cases, to other accessories, or to the engine.

Ground Effects – A term for a car design in which airflow produces a significant pressure differential between the upper and lower portions of the body/chassis, creating downforce on the assembly.

Gudgeon Pin – English term for piston wrist pin.

Gusset – A brace generally formed by attaching, by welding, a plate at or near the junction of two structural beams or tubes, providing reinforcement particularly in the plane including the tubes and the plate.

H.D. – Heavy duty.

H.T. – High tension. English term for spark plug voltage in regard to ignition components.

Hand Brake – A braking system component causing a braking action on 1 or more wheels, or on another part of the drive train, which may be actuated and locked in the engaged position by the driver.

Hardtop – A removable rigid substitute for a convertible or roadster top.

Hatchback – A hinged body component containing the rear window which, in the open position, gives access to the interior of a car from the rear.

Head and Neck Restraint – A protection device which attaches to the helmet and is intended to decease neck stresses and forward head movement during an impact.

Head Rest – See Head Restraint.

Head Restraint – A cushioned, fixed restraining object intended to protect the driver under conditions which cause the driver's head to be thrust rearward.

Header – A multibranch exhaust system assembly, whose function is to convey the exhaust products from more than one cylinder to one or more exhaust pipes.

Header Tank – A component of an engine cooling system, generally at the top or above the radiator, which is often used as the filling point for the system.

Headlight Cover – A protective cover for headlight(s) which is part of the original configuration of the body design.

Heat Riser Tube – An attachment to an induction system which provides a source of warmed air, generally from the exhaust system, as an aid to cold running.

Heat Sink – A part of a system used to convey and dissipate heat from another part of the system.

Helicoil – A commercial repair for internal threads.

Homologation – A system whereby the manufacturer/competitor certifies that a Formula or Sports Racing car, as produced, complies with the applicable specifications.

Hood – The panel or assembly of panels which cover the engine compartment.

Horn – The audible signaling device with which highway cars are equipped.

Hot Terminal – The terminal of a storage battery which is not connected to the frame or chassis of the car.

Hub – A component to which a road wheel is attached, which provides support for the wheel, and has the capability, via attached internal bearings to rotate on a fixed shaft.

Hub Caps – Decorative removable attachments to the central area of road wheels.

Hub Carrier – A suspension component which provides the means for mounting a rotating wheel hub, and for attachment of suspension components and stabilizers.

Idler Shaft – A shaft which rotates, or supports another component which rotates, without itself transmitting the rotational force.

Ignition System – A system which converts on-board storage battery

supply voltage into a timed sequence of high voltage pulses suitable for igniting engine combustion mixtures in a controlled manner.

Independent Suspension – A suspension system in which either wheel on the referenced end of the car can undergo its normal vertical motions without directly influencing the motions of the other wheel.

Induction System – Those engine components directly associated with the creation and conveyance of the combustible mixture, and any functional associated attachments thereto.

Injection Nozzle – The fuel induction system component through which fuel is forced under pressure to form a combustible mixture with air.

Inlet Port – The cylinder head duct leading to intake valve(s).

Insert (Strut) – The replaceable portion of a suspension strut, basically a tubular shock absorber with the necessary fastening element(s) for the upper strut mounting point.

Instrument – An indicator or readout which, when active, contains information about some aspect of car operation for driver reference.

Instrument Panel – A panel, the associated mounting bracket(s), and HVAC ducting components, located within the cockpit of a car, and in a position convenient for driver visibility, which may provide a mounting area for various gauges and controls. Also referred to as a dash pad or dash panel.

Intake – An opening through which fluid/air enters an enclosure.

Intercooler – A heat exchanger associated with a turbocharging or supercharging system, which is intended to reduce the temperature of the incoming air or air/fuel mixture, and is located in ducting between the turbo/super-charger and the engine.

IR – Individual runners. (No balance pipe, no plenum)

Jack Points – Locations on the underside of a car suitable for the application of a lifting jack.

Jack Shaft – A shaft which transfers a driving force from one element of an engine to another, such as the drive for an oil pump and/or distributor, taken from an overhead camshaft.

Jet – A carburetor aperture component which is used to meter air and/or fuel flowing into the mixing region of the carburetor by presenting restriction to the flow.

Kill Switch – See Master Switch.

Lamp – see Bulb.

L.T. – Low tension. English term for battery voltage in regard to ignition components.

Limited Slip Differential – A differential which is designed in such a way as to overcome the normal action of a differential to apply most of the available torque to the least loaded wheel, and instead to apply a significant portion of the torque to the most loaded wheel.

Linkage – A link or system of links (cables, rods, etc.) which convey a mechanical force from one location to another.

Lip-Type Rear Spoiler – A directly attached aerodynamic device which generates downforce from the action of air flowing over a single surface, creating a turbulent depression away from the direction of motion.

Lobe Center – The angular position of a camshaft, defined as that position in the rotation at which the lift of an associated tappet will be greatest.

Locked Differential – A variation of the limited slip differential in which no relative slippage of the two driven wheels is permitted under any conditions.

Lubricant – A substance which, when interposed between components moving with respect to each other, reduces friction and promotes durability. (see 9.3.36)

Lubrication System – those components directly associated with the lubrication of an engine, including hoses, pumps, heat exchangers, internal engine passages, galleries, lubricant retention components, and lubricant entry and exits points, etc.

Luggage Compartment – The region within the bodywork of a car which is designated as being intended for the carrying of luggage.

Magneto – An ignition system component which generates the electrical power for ignition of combustion with a system of magnets and coils in relative motion.

Main Bearing Cap – A reciprocating engine component which has provision for nominally half of one main crankshaft bearing, and which, when attached to the engine block, may also provide lateral location for the crankshaft.

Manifold – A passive device for conveying gases into or out of an engine, generally to achieve the connection of differing numbers of ducts.

Master Cylinder – A hydraulic component of the braking system which produce positive pressure in the hydraulic lines on the application of mechanical force.

Master Switch – A safety switch which can be actuated by the driver or other to disable all operating electrical functions, without disconnecting the electrical supply to any fire system present.

McPherson Strut – (See strut type suspension) A front suspension type utilizing a strut with integral tubular shock absorber and coil spring, with the steering swivel axis that of the strut/shock. Upper location is by strut only.

Metal – An element that forms metallic bonds between its atoms, is usually shiny, is usually ductile and malleable, usually has a high melting point, is usually hard, and conducts electricity and heat well.

Metallic – A material having iridescent or specular (mirror-like) reflective qualities (e.g. aluminum foil).

Metering Rod – A carburetor component which aids in the metering of fuel flow.

Mirror (Rear View) – A reflective device whose sole purpose is to enable the driver's field of vision to extend in a rearward direction.

Modify/Modification – To change a component from stock.

Monocoque – A frameless construction in which the main structure of a car is composed of a permanent assembly of panels to which the running gear, suspension and body are attached.

Motor Mount – See Engine Mount.

Mudguard – A partial fender, generally not contiguous with the car body.

Muffler – A component, whose function is to reduce the sound level from an exhaust system.

NASCAR-Style Door Bars – If installed, shall consist of one or more sidebars that intrude into the door cavity and connect the main hoop to the

front hoop

Needles (Carb) – Tapered carburetor fuel flow metering shafts, or tapered shafts used in float shutoff valves.

Nitride (Verb) – To heat process ferrous metal components so as to increase the surface hardness.

O-Ring – A seal or gasket, generally made from an elastomer or metal, in the shape of a torus with a circular cross section.

O E M – Original Equipment Manufacturer.

Offset Key – A metal drive key for coupling a shaft and a pulley, wheel, or sprocket, in which opposite radial ends of the key are offset to achieve adjustment of the phase relationship of the driving and driven parts.

OHC (Overhead Cam) – A type of reciprocating engine in which the camshaft(s) are located in the cylinder head(s), and act on the valves, either directly or through a linkage.

OHV (Overhead Valve) – A type of reciprocating engine in which the camshaft(s) are located in the engine block, and act on the valves through linkage, generally including pushrods and rocker arms.

Oil Filter – An engine accessory intended to intercept all or a portion of the lubricant circulating from the oil pump, and to remove, by trapping, solid particles from the lubricant.

Oil Galley – A passage within an engine block which carries the flowing lubricant to various internal distribution points.

Oil Line – A hose or pipe, external to the engine, which conveys lubricating oil from one point to another.

Oil Pan – An oil sump fixed to the bottom of an engine.

Oil Passage – A duct within an engine component intended to convey lubricating oil.

Oil Pump – A mechanically-driven pump designed to draw lubricant from a reservoir, or sump, and supply it under pressure to the balance of the lubrication system.

Oil Separator – Sealed inline catch tank, generally located between the crankcase vent and intake tract.

Oil Strainer – A screen surrounding the oil pickup in an engine which is intended to keep relatively large solid particles from being drawn into the pump.

Oil Sump – The container in which the return lubricant from the engine is collected to form the supply from which the pump may draw.

Orientation – Alignment relative to its major axis.

Outline – A line that marks the outer limits of an object or figure.

Overhang – The distance which the end of the bodywork extends away from the wheels at the referenced end of the car.

Panhard Rod – A rear axle lateral locating device, which has one end connected via a link to the axle housing, and the other end connected to the car structure or bodywork.

Parkerizing – A commercial process in which a metal part, usually a camshaft, is treated to increase resistance to break-in scuffing.

Parking Brake – See Hand Brake.

Parking Light – A non-racing lighting component, frequently combined

with lighting components of other functions, intended to illuminate the extremities of a car while parked.

Phase – The angular relationship between two rotating components, or between 1 rotating component and a periodic event.

Pickup point (Suspension) – The location of attachment of a suspension component on the frame or structure of the car. Pickup point is also referred to as "pivot axis."

Pilot Bearing – A bearing, generally within one end of a shaft, which is intended to support another shaft under conditions of relative rotary motion.

Piston – A reciprocating engine component whose functions are to provide a partial vacuum with which to induce the flow of fuel/air into the combustion region, to convert the combustion pressures to reciprocating motion, and to expel exhaust gases.

Piston Deck Height – The distance between the top of the piston at its outer edge and the machined surface that forms the head/block interface of the block (piston).

Piston Ring – A reciprocating engine component which, when mounted on a piston, provides either sealing or oil control functions when the engine is in operation.

Pitman Arm – A steering system component which translates the rotation of the steering gears to a linear motion of steering links.

Plenum – An induction system chamber generally interposed between carburetor(s) or air intake(s) and ducts feeding ports.

Points (Ignition) – The switch portion of a distributor actuated by cam lobes, which interrupts the current flowing through the primary windings of an ignition coil, thus generating high voltage pulses which are conveyed to the spark plug.

Polish (Verb) – To reduce the roughness of a surface by mechanical, chemical, or electrochemical means.

Port – See Intake, Exhaust Ports.

Power Brakes – A braking system in which the driver-initiated mechanical force acting on a master cylinder is assisted by a servo mechanism, generally derived from manifold vacuum.

Power Steering – A steering system in which the driver-initiated force acting on the steering gears is assisted by a servo mechanism, usually involving an engine-driven hydraulic pump.

Pressure Equalizing Device – A braking system component intended to equalize or allow adjustment of the relative pressures in separate branches of the hydraulic system (e.g. front/rear).

Pressure Plate – The clutch assembly component which provides the force necessary to couple the engine to the next component in the drive train through friction surfaces.

Pressure Regulator Spring – A spring whose installed force determines the pressure at which a valve or valve system will open to allow the flow of fluid.

Profile (Verb) – To measure or to reshape the contour of a camshaft lobe, rocker arm or similar component.

Propeller Shaft – See Drive Shaft.

Proportioning Valve – A braking system component intended to allow

adjustment of the hydraulic pressures available in separate branches of the system (e.g., front/rear).

Pulley – A rotational attachment for a drive belt.

Pushrod – A cylindrical or tubular reciprocating engine component which transmits a reciprocating motion arising from camshaft rotation to or toward the valves.

Pushrod Tube – An engine component which encloses a pushrod in the region between the engine block and the cylinder head.

Qualifier – (a) One who receives a time, or (b) One who is waived into a race by the Chief Steward and starts the race.

Racers Tape – Generally duct tape, an adhesive, fabric-backed tape.

Rack and Pinion – A type of steering system, or the gear components thereof, in which the rotary motions of a pinion gear attached to the steering shaft act on a rack, or linear gear.

Radiator (Cooler) – A heat exchanger intended to remove heat from engine or gear fluids.

Radius (Verb) – To contour an abrupt edge on a component by increasing the radius of the transition.

Rain Tire – A racing tire intended solely for competition in wet conditions.

Ram Air – A type of induction system in which the incoming air is obtained from an extension into the airstream outside the bodywork.

Ratio (Gear) – The number of rotations of the drive shaft which produces one (1) rotation of the driven shaft(s).

Rebound – A suspension term referring to motion in the upward direction.

Reciprocating Engine – An internal combustion engine in which the driven actions of one or more pistons are converted to the rotary motion of a crankshaft.

Relief Valve – A check valve intended to vent at a predetermined pressure differential.

Remote Reservoir Shock Absorber – Any shock absorber or dampening device which uses an externally mounted (connected either by hose or “piggy back” design) fluid and/or gas reservoir.

Removal – To take off a component.

Repair (Verb) – To remove the effect(s) of accidental damage to a component, returning it to original or legally modified dimensions and function.

Replica – A component identical to or very similar in appearance and function to the original which it replaces.

Resistor Spark Plug – An ignition system spark plug containing electrical resistance which is intended to reduce radio interference.

Ride Height – The distance from level ground to the specified portion of the car, with the tires, wheels, air pressure, etc., as normally raced.

Rim Width – The distance between the opposing lateral sides of a road wheel in the region where the bead of a tire seats. Measuring method per tire and rim association standard.

Ring Gear – The main driven gear in a final drive assembly, driven by a pinion gear. Also the starter engagement gear on a flywheel.

Rocker Arm – A valve train component which transfers the motions of the camshaft, often with a multiplication of travel, to a valve.

Rocker Cover – See Valve Cover.

Rocker Panel – The body panel closest to the ground extending along either outer side of a car between the wheels.

Rod End – A load-bearing threaded mechanical coupling with angular freedom of the relative axes and which allows rotation of the inner portion with respect to the outer, i.e. heim joint.

Roll Bar – A safety device designed to protect the driver from injury in the event of a roll over accident. See Section 9.4.

Roll Cage – An extension of a minimal roll bar, designed to protect the driver from injury from accidental forces in several directions. See Section 9.4.

Roller Cam Follower – An engine component (tappet) which utilizes a rolling member to contact the camshaft.

Rotary Engine – A non-reciprocating engine of the NSU-Wankel type.

Rotary Engine Rotor – The main rotating component of a rotary engine, which essentially accomplishes the compression, power delivery and exhaust functions of a reciprocating engine in constrained rotation in a specially shaped housing.

Rotary Piston – See Rotary Engine Rotor.

Rotor Housing – The housing of a rotary engine in which the rotor rotates. Analogous to the engine block of a reciprocating engine.

Rub Strip – Expendable material added to bottom of a car to prevent contact with the road surface from damaging non-expendable portions of the car.

Runner – A duct of an induction system leading to the cylinder head.

Running Light – A signaling light of specified size and location, which can be activated by driver control, and is intended to improve the ability of other drivers to detect the signaling car.

Scattershield – A stationary safety device intended to protect the driver in the event of catastrophic clutch/flywheel failure.

Scraper – A passive internal attachment to an oil pan whose purpose is to control the return flow of lubricant by removing it from the rotating crankshaft.

Seal – A conformable sealing component generally used to inhibit the passage of fluids along the shafts of moving parts, such as valves, master cylinders, etc.

Seat Belt – A safety strap, generally containing the attachment/release mechanism for all other safety straps, intended to restrain the driver against forces tending to move the driver. See Section 9.3.18.

Section Width – The lateral cross section of a tire, sidewall to sidewall.

Servo Assist – The application of mechanical assistance, through vacuum or hydraulic or other external action, to reduce the forces required from the driver.

Shaved Tread – A tire tread which has been abraded or cut to reduce the tread depth.

Shift Fork – A transmission or transaxle component which directly moves gears into engagement or disengagement in response to driver actions.

Shock Absorber – A device intended to dampen the actions of road springs.

Shot Blasting – See Shot Peening.

Shot/Glass Peening – A treatment, consisting of impelling small glass or metal balls into metal parts, intended to reduce stresses in components.

Shoulder Harness – A safety strap assembly intended to restrain the driver's upper body under conditions of rapid reduction of forward velocity. See Section 9.3.18.

Side Marker Light – A small light fixture normally mounted on the side of a fender, which is intended to make the car more readily visible from the side under appropriate conditions.

Signal Light – A light fixture used to signal turns or, in some cases, stops.

Single Inlet Restrictor (SIR) – A system to limit engine performance that meets the following criteria:

A. The intent of this restriction system is to have a sealed system from the restrictor to the intake ports of the cylinder head. All of the air entering the intake ports shall pass through the specified restrictor. Modification or addition to any part of the intake system that allows the introduction of air into the intake ports that has not passed through the specified restrictor is prohibited.

B. The engine air intake system must be fitted with an aluminum air restrictor. The intake system is defined as an assembly of parts, including but not restricted to: the restrictor, restrictor housing, ducting, filters, air box, velocity stacks, throttle body, carburetors, manifold and manifold gasket up to the intake ports on the cylinder head.

C. The restrictor must be round in shape. The maximum ID of the restrictor is listed on the vehicle's spec line. The restrictor's maximum ID must be maintained for a minimum length of 3mm. Restrictor mounting/placement within the intake system is free, but must allow accessibility for measurement. It is acceptable to have some minor disassembly of the intake system to provide access to the restrictor for measurement. Measurement device and restrictor shall be similar temperatures when used.

D. Sealing the restrictor from its supply of air must cause the engine to stop within 4 seconds. This check is to be made at an engine speed of approximately 2500 rpm. The sealed airbox must withstand this test. Pressure sensors present inside the intake system must be disconnected during this check.

Slave Cylinder – A hydraulic system component which achieves the conversion of hydraulic pressure to mechanical force, usually to accomplish a disengagement of the clutch.

Space Frame – An automotive frame constructed of multiple small tubes. See also Tube Frame.

Spark Plug – An engine component which, by means of high voltage supplied by an ignition system, initiates the combustion of the air/fuel mixture.

Specification – A detailed presentation of parameters which determine the performance or suitability of a system or assembly of systems to accomplish design goals.

Spherical Bearing – A load-bearing connector in which the central portion is convex and the outer portion is concave, allowing both angular displacements of the axes and relative rotation.

Spider Gears – Components of the torque division section of a conventional differential gear assembly.

Spindle (Stub Axle) – The shaft, and integral assembly supporting a wheel hub, and often, braking and/or steering components.

Spoiler – A panel attached to the body of a car at the front or rear, intended to alter the airflow around or under that end of the car when in motion.

Spring Cap – See Valve Spring Retainer.

Spring Shock – A suspension assembly containing a coil spring surrounding a tubular shock absorber.

Spring Washer – A spacer designed to exert force against securing pressure, thus reducing the tendency of an attached threaded fastener to separate.

Sprocket – A gear made specifically for use with a drive chain.

Stabilizer – An attachment to the suspension system, not usually part of the suspension, which aids in maintaining the relative alignment of a wheel or wheels to the car.

Starter (Self Starter) – An electrical device which is used to initiate normal engine operation by converting electrical energy into mechanical rotation of the engine.

Starter Ring – The gear on the outer periphery of a flywheel for application of drive from a starter.

Stayrod – A rigid reinforcement bar or rod interconnecting opposite sides of a car at structurally significant locations.

Steering – The mechanical system of components that allow a wheel to be turned side to side to follow the desired course of its driver.

Steering Arm – The rigid link in a steering system which conveys the steering action from the steering gears and linkage to a wheel assembly.

Steering Column – The shaft forming the connection between the steering wheel and the steering gear, through which driver-initiated steering motions are transmitted.

Steering Linkage – The various components, exclusive of gears, steering column and steering wheel, which transmit the driver's steering motions to the steered wheels.

Steering Lock – The degree of turning motion given to the steering wheel, and hence to the steered wheels. "Full lock" denotes the maximum available turning angle.

Steering Lock Mechanism – An antitheft device used to lock the steering shaft or wheel when the ignition key is withdrawn.

Stock – In the exact same state or location as supplied by the original manufacturer.

Streamlining – Smoothing the airflow over a portion of the car.

Stroke – The length of travel of an engine piston from uppermost to lowermost positions.

Strut (Stabilizer) – A rigid beam used to assist in the location of suspension components.

Strut Type Suspension – Strut suspension consists of three pivoting attachment points including a single upper attachment point, the spindle being mounted on a telescoping post with no vertical movement at the top attachment point.

Stub Axle – See Spindle.

SU-type Carburetor – Any single barrel automotive-type side draft, overhead sliding piston type carburetor regardless of manufacturer.

Sub-frame/Cross Member – A component attached to the frame or structure of a car in order to augment its strength while at the same time serving as a platform for mounting suspension and drive train components.

Substitution – To remove a component and replace it with another.

Surround – To enclose on all sides.

Sunroof – A movable panel in the roof of a car, which may normally be partially opened from within the car.

Supercharger – An induction system compressor component, mechanically driven from the engine, which provides forced flow of the fuel/air mixture into the engine by the generation of positive pressure.

Suspension – A mechanical system of components controlling vertical motion and connecting the axle housing and wheels to the chassis of a car.

Suspension Bushing – A hollow cylindrical mounting component which acts as a bearing, allowing constrained motion, between a suspension component and attachment point.

Suspension Control Arm – A beam or frame intended to limit the normal motion of the affected suspension part to predetermined paths.

Swaged Fitting – A tubing fitting which utilizes some form of extrusion of the tubing to form a seal against the leakage of pressurized fluid from within the tubing.

Sway Bar – See Anti Roll Bar.

Synchronizer – A transmission component which aids in matching speeds of 2-gears as they are engaged.

System – An assembly of components with an identifiable primary function.

T-type Top – A body design in which the roof contains, above the front seats, 2 removable panels separated by a fixed section which joins to the balance of the roof.

Taillight – The running (parking) light assembly at the rear of a car, which may include lights with stop and/or turn signaling functions.

Tap (Verb) – To cut threads in a hole to retain a stud or bolt with threads of matching pitch and diameter.

Tappet – (Cam follower, valve lifter) An engine component which, in contact with the camshaft, follows its rotating profile, resulting in a programmed reciprocating motion suitable for actuating valves.

Targa-Type Top – An automotive roof design in which the area over the front seats is removable.

T D C – Top dead center, referring to the rotational position of the crankshaft when the number one piston is farthest from the crankshaft.

Tender Spring – A spring used to capture the spring with the perches at full droop and are completely compressed when the car is at static ride height. Static ride height shall be determined with driver seated in the normal driving position.

Thermostat – An engine cooling system regulator device which is intended to control the temperature of the coolant by modulating the flow through an aperture.

Throttle Butterfly – An induction system component which may effectively vary the area of the induction port when turned (in response to driver input) from parallel to the flow in the port ("full throttle"), to almost perpendicular to the flow ("closed throttle").

Throwout Bearing – A bearing which, in response to driver actuation, accomplishes the application of the force needed to release the friction clutch through the actuation of the pressure plate.

Tie Rod – The link connecting a portion of the steering system which is fixed to the chassis to a sprung wheel.

Time (Verb) – To adjust the phase relationship of ignition and crankshaft, or of camshaft(s) and crankshaft.

Timing Belt – A toothed belt used, with appropriate pulleys, to convey drive force in a synchronous manner from the crankshaft to one or more camshafts.

Timing Gear – The engine gear or sprocket attached to a camshaft and driven by the crankshaft via gear(s) or chain.

Tire Tread – The portion of a tire containing the material intended to be in road contact while a car is in straight-ahead motion.

Toe (-In, -Out) – The measure of the position of the wheels on either axle of a car with respect to each other, with reference to the fore/aft direction.

Tonneau Cover – A cover for the passenger portion of an open car.

Top (Removable) – A removable covering for an open car, normally supplied for protection against the elements.

Torque Biasing Differential – A form of limited slip differential.

Torque Converter – An engine-driven power transmission device which couples driving and driven shafts with a variable speed reduction.

Torque Suppressor – See Engine Steady Bar.

Torsion Bar – A bar or beam intended to act as a springing medium, in which the "springing" is derived from resistance to twisting along the main axis of the bar.

Track – The distance between the center of the rims of two wheels at one end of a car, with any angular adjustments at normal settings and steered wheels in the straight ahead position.

Traction Bar – A longitudinal link to an axle housing or hub carrier which resists torque reaction from the driven wheel(s) by acting in compression or tension.

Traction Control – Any system that employs electronic signals to reduce wheel spin, independent of direct driver inputs. To achieve their goal, such systems may, for example, reduce engine speed, reduce fuel flow, selectively apply braking, or modify differential input.

Trailing Arm – A wheel control linkage locating the wheel in the fore/aft direction, which is attached to the car structure at the forward end of the arm, and to the wheel carrier at the rear of the arm.

Transaxle – A component containing the mechanisms necessary to achieve the combined functions of a transmission and a differential.

Transistor Ignition – A system of ignition in which electronic components are utilized.

Translucent – Permitting the passage of a reasonable amount of visible light. In the case of fluid containers, permitting the visual assessment of

fluid levels by observing these through the container.

Transmission (Gearbox) – An assembly of driver-selectable gears in an independent housing, located between the engine and driven wheels, whose function is to alter the rotational velocity reaching the wheels.

Transparent – Offering very little resistance to the passage of visible light, suitable for use in the line of sight.

Transverse Engine – An engine located in a car such that the crankshaft centerline is nominally perpendicular to the normal direction of car motion.

Trim – Coverings or attachments whose function is solely cosmetic.

Trued Tread – The tread of a tire which has been cut after mounting on a wheel so as to ensure that the surface of the tread is equidistant from the center of the wheel at all angles of rotation.

Trumpet – See Velocity Stack.

Trunk Area – The spare tire and/or luggage region inside the body of a car.

Tub – The central contiguous assembly of stressed panels which form the basic structure of a frameless car.

Tub-based (non tube-frame) Car – A non-tube frame car has a stock floor pan, firewall, door pillars, sills, windshields conforming to stock profile, and window frames, etc.

Tube Frame Car – A car intended solely for racing, whose main structure or frame is fabricated from an assembly of tubes welded into the desired configuration.

Tuftriding – A commercial surface hardening process for ferrous metals.

Turbo Boost Control – An adjustment which causes a change in the degree of turbo boost available.

Turbo Inlet Restrictor – A system to limit engine performance that meets these criteria. The inlet restrictor shall be placed within 50mm of the rotating section (impeller assembly) of the pressurizing unit. The inlet restrictor shall have a single, circular opening through which all inlet air passes. The maximum ID of the restrictor is listed on the vehicle's spec line. The restrictor's maximum ID must be maintained for a minimum length of 3mm. There shall be no other provisions for airflow to the turbo-charger other than through this single orifice. NOTE: for more information please visit: http://www.isiaz.com/turbochargerrestrictors/.

Turbocharger – An induction system compressor component, driven by exhaust gases from the engine, which provides forced flow of the fuel/air mixture into the engine by means of positive pressure.

Undertray (Belly Pan) – An attachment to the underside of a car intended to smooth airflow and/or to offer driver protection in this region of the car.

Unibody – A type of construction in which the main car structure is fabricated from an assembly of panels and reinforcements, permanently fastened together, generally by welding, into a single unit.

Universal Joint – A mechanical drive train component which permits a change in direction of the axis of rotation conveying the force.

Unswept Volume – The enclosed volume existing in a cylinder/cylinder head with the piston at its closest approach to the cylinder head.

Vacuum Advance Mechanism – An ignition distributor mechanism which, under the influence of manifold vacuum, changes the ignition timing in a prescribed fashion.

Valance – Bodywork welded or bolted to the cars body/structure, at the

front or rear of a car, normally but not always located behind and/or below the bumper.

Valve – A reciprocating engine component, consisting of head and a stem, which may be opened or sealed in phase with crankshaft rotation, so as to control the induction of fuel/air mixtures or the exhaust of products of the combustion process.

Valve Cover – A cylinder head attachment whose function is to contain lubricants and to protect the valve actuation mechanism from outside contaminants.

Valve Guide – A sleeve bearing whose function is to provide axial location of a valve, while allowing normal reciprocating motions.

Valve Head – the portion of the valve that is larger than the stem.

Valve Keeper – The component, generally two-piece, which secures the valve spring retainer to the valve stem in a cylinder head.

Valve Relief – A cutout in a piston crown to allow close approach of a valve.

Valve Seat – The area in a cylinder head in which the head of a valve under spring pressure forms a gas seal.

Valve Size – The diameter of the head of a valve.

Valve Spring Retainer (Collar) – A valve train component which serves the dual purpose of containing the outer end of the valve spring(s), and, by means of valve keepers, connecting the valve stem to the spring.

Valve Spring Shim – A valve train component whose purpose is to allow the adjustment of the seated valve spring pressure by effectively changing its seated length.

Valve Stem (Engine) – The shaft portion of a reciprocating engine poppet valve.

Valve Stem (Wheel) – The attachment to a road wheel through which pressurizing air is admitted/released.

Vapor Lock – A condition in the fuel delivery system caused by the existence of vapors, rather than liquid fuel, in the fuel pump, resulting in abnormal fuel delivery.

Variable Ratio Drive – A power transmission device in which at fixed input shaft rotational velocity the rotational velocity of the driven shaft is continuously variable over a prescribed range of ratios.

Velocity Stack (Air Horn/Trumpet) – An induction system attachment, generally in the form of a cylindrical flare, used to alter the dynamic coupling between carburetor and the mass of incoming air.

Vent – An aperture which allows pressure equalization between a semi-sealed volume and the outside of this volume by providing a flow path for gases.

Ventilation – Cooling a component by an intentional flow of air, or modifying a component so as to facilitate this process.

Venturi – A region of constriction in an air duct of a carburetor in which, through the actions of incoming air flow, a reduced pressure is created to induce the inflow of fuel through one or more jets.

Vibration Dampener – Generally a rubber-mounted rotating circular disc or pulley whose function is to reduce the amplitude of vibrations in the mechanism or part to which it is attached.

Visible – Capable of being seen, perceptible to the eye, apparent, evident.

Voltage Regulator – An electronic or electromechanical device intended to regulate the charging actions of an alternator or generator.

Watts Linkage – A rear axle lateral location system which employs a frame/body-mounted central pivoting attachment (bell crank) for 2 lateral links, whose opposite ends are attached to either end of the axle housing or vice versa.

Wave Washer – A thin, continuous spring washer.

Welding – The process of fusing one or more components into a single unit by means other than adhesives or fasteners (i.e. TIG, MIG, soldering, brazing, etc.).

Wheel – Flange and Rim.

Wheel (Steering) – The cockpit-mounted control device, normally circular, which allows the driver to exert manual force with which to control the car's direction of motion.

Wheel Cover – A removable decorative covering for a road wheel.

Wheel Cylinder – A hydraulic component of the braking system, which produces mechanical force at the wheel brakes in response to positive hydraulic pressure.

Wheel Fan – An integral part of or attachment to a wheel assembly with blade-like elements, intended to improve brake cooling.

Wheel Spacer – A plate of unspecified thickness or material which is mounted between a road wheel and hub to increase the distance from the inside of the wheel to the hub, thereby increasing track.

Wheel Trim Rings – Decorative removable attachments to road wheels effectively covering the rim area of the wheels.

Wheel Well – The volume under a fender.

Wheelbase – The distance between the front and rear axle centerlines of a car, with the front wheels in the straight ahead position.

Windage Tray – An internal baffle attachment to an engine oil pan which is intended to help maintain a sufficient supply of lubricant at the location of the oil pickup under cornering, braking or acceleration.

Windows: –

A. Door or Side – The opening where the window normally is raised or lowered in a door. Does not include a "vent" window whether fixed or movable.

B. Quarter (1/4) – On a 2-door or 4-door vehicle, the window to the rear of the rearmost door. Such windows are not generally raised or lowered, but they may be hinged and open to the rear. Quarter windows are not "rear" windows.

C. Rear – Rear windows are positioned at right angles to the longitudinal axis of the car.

Windshield (Windscreen) – An attachment to the bodywork of a car intended to divert the flow of air from forward motion without obstructing forward vision.

Windshield Pillar – A body component which extends nominally upward from the cowl area, forming one supporting attachment for the windshield.

Wing – An aerodynamic attachment to the structure of a car specifically intended to generate downforce from the action of air flowing over the upper and lower surfaces, creating a pressure differential.

Wiring Harness – Bundles of electrical wires which provide the electrical links in a car.

Wishbone Type Susp. – A form of suspension in which the lower (and often upper) locating links are in the form of a wishbone or "A-frame", and provide the lateral and at least a portion of the fore/aft wheel location.

Working Chamber – The volume in a rotary engine which is defined by the case and the two adjacent rotor tip seals, and which will vary in capacity with position in rotation.

Worm and Sector – A steering gear type in which the steering forces from the driver are transmitted to the steering linkage via a worm gear and a sector gear in mesh.

Wrist Pin – The one-piece physical link between a connecting rod and a piston.

Zerk Fitting (Grease gun fitting) – A small check valve attachment to a bearing housing through which pressurized lubricant may be applied to the bearing.

APPENDIX G. FACTS, FORMULAS, AND MEASUREMENT STANDARDS

1. FACTS AND FORMULAS TO BE USED AT ALL SCCA EVENTS

1 inch = 2.54 cm = 25.4 mm

1 cubic inch = 16.387 cubic cm

1 millimeter = .03937 inch

1 kilometer = 1000 meters =.62137 mile = 1093.6 yards

1 mile = 1,760 yards = 1.60934 kilometers

Miles per hour = kilometers per hour x .62137

Kilometers per hour = miles per hour x 1.60934

1 cubic centimeter = .061 cubic inch

1 liter = 61.03 cubic inches = 1000 cubic centimeters (cc)

1 kilogram = 2.21 pounds

1 pound = 453.6 grams

Cylinder volume (displacement) =

3.1416 x bore x bore x stroke

4

Engine displacement = Cylinder volume times number of cylinders

Compression ratio = V1 + V2

V2

Where V1 is total volume of one cylinder

V2 is volume of space above piston at top of stroke

Piston speed (ft. per min.) = 2 x RPM x stroke in feet

Brake Horsepower (BHP) = RPM x torque (in lbs ft.)

5252

Note: Formula is actually: 6.28 x RPM x torque

33,000

6.28 into 33,000 we get 5250

Torque = BMEP x Swept volume (in cc)

2473

Frontal Area (for figuring air resistance) = T x H (square feet)

144

Where T is front tread in inches, H is overall height in inches.

MPH = RPM x wheel diameter (in inches)

gear ratio x 336

Note: Wheel diameter is overall diameter of the inflated tire, not the nominal diameter of the wheel.

2. MEASUREMENT STANDARDS

The following specifications shall meet the standards set below unless otherwise specified or unrestricted in the individual category or class preparation rules. Any specification not listed herein shall meet stock factory specifications unless otherwise specified or unrestricted in the individual category or class preparation rules. For these specifications, the tolerance shall be equivalent to ½ of the final digit of the specification (e.g. .01" tolerance equals +/- .005"). Absolute maximum means tolerances of +0.000 inches or +0.00 millimeters. Absolute minimum means a tolerance of -0.000 inches or -0.00 millimeters. Measuring devices available to scrutineers differ from location to location so it is the responsibility of the driver to insure that measurements comply with these rules.

1. Weight is absolute minimum.
2. Track is absolute maximum.
3. Rim width is absolute maximum.
4. Wheelbase has a tolerance of +/- 1"
5. Valve size is absolute maximum.
6. Throttle bore and/or venturi size and intake restrictor size is absolute maximum.
7. Drum brake size is nominal i.d. plus manufacturer's "turning" tolerance.
8. Disk brake rotor diameter has a tolerance of +0.1".
9. Engine cylinder bore is absolute maximum before allowable overbore.
10. Engine stroke length is absolute maximum.
11. Valve lift is absolute maximum.
12. Compression ratio is absolute maximum
13. Dialetric Constant has a tolerance of +0.2. *(G-01 and FTK-01 meters) or +2 (DT-47FT meter).*

3. MEASURING COURSES

The official length of a course shall be measured along the centerline of the road.

4. MEASURING TRACK

Track is the distance between the centerlines of the wheels as raced, without driver, measured at a horizontal plane through the wheel hub centerline. Alternatively, it may be measured from the inside of one wheel at the hub centerline height to the outside of the other wheel, then conversely from the outside of the first wheel at hub centerline to the inside of the second wheel. The 2 dimensions obtained are to be added together and divided by 2 to obtain the average. Measurements are to be taken at both front and rear of the wheels and averaged to compensate for toe-in/out. Under certain circumstances it may be preferable to measure from the outside of one wheel to the outside of another and from this dimension deduct the thickness of one wheel. This should be repeated 180° opposite to the first measurement and the two dimensions averaged.

APPENDIX H. INDEX

A

Aborted start 58, 140
ABS 82Accident 27, 40, 49, 53, 80, 83, 87, 159
Accumulators 81
Advertisements 81
Affidavit 66, 128
Air Bottles 56, 57
Alcoholic Beverages 17
Ambulance 34, 40, 41, 54
Annual Technical Inspection 45
Appeals 50, 73, 74
Appearance 81
ASN 21, 22, 79, 116, 127
Assistance 17, 58, 60, 63, 159
Assistant Chief Steward 38, 52, 53, 69
Authorized Events 16
Automatic Penalties 65
Awards 20, 28, 29, 62, 64, 73

B

Ballast 81
Batteries 81
Black Flag 133, 134
Blocking 63
Bodywork 81, 88, 89, 92, 93, 97, 100, 106, 149, 155, 156, 158, 166, 189
Bond 52, 70, 71, 90
Brake Lights 96, 97
Brakes 166
Breach of Rules 16

C

Camera Mounts 82
Canceling 24
Carburetor 82, 91, 143, 147, 151, 154, 155, 156, 157, 162, 165
Catch Tanks 82, 98
Categories 76
Category 26, 46, 76, 82, 90, 107, 169, 179
Chain Guards 98
Chairman of the Club Racing Board 119
Chairman SOM 26, 39, 51, 52, 64, 69, 71, 80, 126, 127, 128, 135
Change of Division 31

Checkered Flag 60, 61, 62
Chief Course 38
Chief Observer 38, 49
Chief of Communications 38
Chief of Emergency Services 38, 39, 132
Chief of Flagging 38, 42
Chief of Grid 38
Chief of Pit 38
Chief of Race Administration 38
Chief of Sound Control 38
Chief of Timing and Scoring 38, 47, 66, 94
Chief Registrar 38, 43
Chief Starter 38, 44
Chief Steward 16, 17, 22, 26, 27, 38, 39, 41, 42, 44, 45, 46, 47, 48, 49, 50, 51, 52, 53, 54, 55, 56, 57, 58, 59, 60, 61, 63, 64, 65, 66, 68, 69, 71, 72, 74, 78, 80, 87, 90, 96, 125, 126, 127, 132, 134, 136, 139, 140, 158
Chief Technical Inspector 38, 44, 45, 46, 70, 80, 82
Classes 76
Club Racing Board 16, 25, 68, 116, 119, 186
Co-Driver 29
Combining 26
Communications 38, 41, 42, 43, 138
Compliance Checking Crew 53, 133
Conduct 3, 12, 14, 16, 18, 19, 24, 26, 51, 79, 118, 120, 132, 133, 138
conflict of interest 16, 132
Control Line 58, 61
Corner Stations 42, 133
Counter-Race Direction 42, 63
Course 14, 25, 29, 39, 42, 44, 45, 48, 49, 54, 55, 56, 58, 59, 60, 61, 63, 117, 118, 120, 126, 133, 134, 135, 138, 139, 140, 161, 169
Court of Appeals 12, 16, 28, 29, 65, 68, 71, 72, 74, 128, 135
Crew 13, 16, 17, 18, 28, 34, 43, 45, 46, 51, 53, 56, 61, 63, 64, 65, 69, 134
Cryogenic Treatment 82

D

Dangerous 17
Data Collection 82
Dead Heats 30, 62
Decals 45, 88, 95
Definitions 116, 142
Disqualification 49, 66, 74
Double National 20, 118, 119
Driver School 119

Drugs 132

E

Emergency 38, 39, 41, 53, 132
Entrant 16, 17, 27, 28, 34, 35, 45, 51, 52, 64, 69, 70, 71, 80, 90, 113, 117, 119, 178, 192
Entries 21, 25, 26, 32, 43, 48, 78, 79, 138
Entry Form 25, 35
Entry List 27, 49
Executive Steward 16, 18, 39, 40, 41, 56, 57, 66, 116, 118, 122, 138

F

False Start 59
FIA 12, 21, 76, 79, 84, 87, 88, 92, 99, 109, 110, 114, 116, 131, 178
Final Results 48, 66
Fines 64, 72, 73
Finishers 29, 46, 49, 62, 79, 133
Fire System 88
Fire Truck 40, 41
Firewall 89, 150
FISA 116
Flagging & Communications 42, 138
Flags 42, 43, 44, 54, 58, 60, 138
Fuel 89
Fueling 134
Fuel Sample 90, 92

G

Gas Cylinders 56, 57
Gloves 87
Grid 48, 56, 57, 58, 60, 70, 87, 100, 134
Grouping 58, 59

H

Hand Controls 81
Hand Signals 63
Helmet 82
Historic 21, 22, 23, 26, 80, 132
Homologation 80, 87, 114, 179
Hospital 41
Hot Pit 55, 56, 134, 138

I

Identification Markings 93
Impound 46, 48, 68, 71, 80, 87, 133, 135
Insurance 13, 27, 28, 39, 120, 121, 132
Interdivisional Championship 119

J

Judges 38, 49, 125, 133

L

Lap Charts 47, 48
Late Starters 59
Licenses 20, 21, 22, 34, 38, 72, 117, 122, 127, 132
Lights 96
Logbook 79, 80, 102, 113
Logo 24

M

Master Switch 97
Media 47, 49, 145
Medical 17, 18, 40, 41, 120, 123, 126, 127
Medical Personnel 40
Minors 28, 122, 124, 127
Mirrors 98

N

Narcotics 132
National Champion 31, 32
Novice Permit 23, 123, 124, 125, 126, 127, 130, 131, 135
Numbers 79, 93, 94

O

Observers 49, 133
Observer's Reports 50
Officials 13, 14, 16, 28, 38, 39, 42, 44, 45, 49, 52, 60, 61, 63, 70, 116, 120, 132
Oil Lines 81
Oval Track 140

P

Pace Car 58, 59, 139, 140
Pace Lap 57, 58, 59, 60, 61, 134, 140
Paddock 17, 46, 55, 134
Participant 13, 14, 16, 17, 18, 27, 34, 35, 45, 53, 68, 70, 72, 86, 90, 120,

132
Participation Level 78
Passengers 63
Passing 58, 59, 60, 83, 143
Patch 94
Penalties 50, 65, 66, 68, 74, 134
Penalty 35, 45, 46, 49, 50, 52, 65, 66, 68, 71, 72, 73, 74, 80, 128, 134, 135
Pets 17
Photo ID 35, 36
Physician 40
Pits 17, 18, 46, 54, 55, 56, 59, 60, 61, 63, 133, 134, 140
Points 20, 29, 30, 52, 62, 64, 65, 66, 68, 74, 81, 82, 83, 106, 107, 108, 134, 142, 144, 148, 149, 151, 155, 156, 161, 180, 182, 183
Postponement 24
Practice 17, 20, 24, 40, 48, 138, 139, 145
Press Officer 49
Probation 51, 64, 65, 66, 72, 128
Program 28, 39, 51, 79, 117, 120
Protest 28, 29, 32, 46, 48, 50, 52, 65, 69, 70, 71, 72, 74, 80, 90, 123, 135
Protest Fee 70, 90
Provisional Results 48
Push Starts 57

Q

Qualifying 17, 20, 24, 47, 48, 52, 55, 56, 57, 59, 60, 100, 117, 134, 136, 138, 139

R

Race Chairman 38, 39, 40, 41, 47, 53, 132
Racing Room 62, 141
Rain Racing Procedure 61
Rear Window Straps 101
Red Flag 55, 60
Regional Only 76
Region of Record 27, 30, 31
Registrar 26, 28, 38, 39, 43
Reprimand 64
Request for Action 52, 66, 68, 69, 135
Restarts 60, 63, 134
Restraint System 82, 83, 84, 87
Results 13, 24, 26, 27, 47, 48, 49, 50, 51, 62, 66, 68, 70, 73, 79, 80, 90, 92, 117, 133, 135, 146
Retiring 55
RFA 52, 68, 72, 90, 135

Roll Cages 79, 83, 93, 96, 98, 100, 102, 107, 108, 109, 111, 113, 114, 178, 179, 182, 186, 190, 192, 193, 194
Rolling Start 57
Rules of the Road 62
Runoffs 31, 32, 38, 40, 46, 74, 76, 117

S

Safety Car 54, 60, 134, 136, 140
Safety Car Procedure 60
Safety Inspection 45, 81
Sanctions 20, 119
Scaffolding 27, 132
Scales 26, 46, 47
Scattershields 98
Scheduling 24, 116, 118, 119, 139
Scoring 38, 39, 43, 47, 48, 49, 61, 62, 66, 94, 138
Scrutineer 86
Seat 83, 96, 100, 105, 111, 112, 181, 182, 183, 184, 187, 193
Shoes 87
Shortened Race 61
SOM 16, 17, 20, 24, 26, 27, 29, 35, 38, 39, 43, 47, 48, 49, 50, 51, 52, 57, 64, 65, 66, 68, 69, 70, 71, 72, 73, 74, 80, 90, 126, 127, 128, 134, 135,
Sound Control 43
Split Starts 59
Start 24, 29, 32, 48, 57, 58, 59, 61, 70, 79, 114, 126, 134, 136, 139, 140, 143, 179, 185, 188, 193, 194
Starter 61, 140, 141, 144, 151, 158, 161
Steering Wheel Locks 99
Stewards of the Meeting 16, 38, 49
Sunroofs 82
Supplementary Regulations 139
Suspension 42, 51, 64, 65, 66, 99, 142, 143, 154, 157, 161, 162

T

Tapes 48
Technical Inspection 45, 52, 88
Ties 56, 100
Timing 38, 39, 43, 47, 48, 49, 58, 61, 62, 66, 94, 138, 142, 146, 163
Tires 61, 76, 100, 134, 139, 158
Towing Eyes 100
Traction Control 163
Transmissions- Automatic 81
Transponders 47
Trophies 26, 29, 39, 62

U

Unsportsmanlike Conduct 16

V

Video Camera Mounts 82
Vintage 21, 22, 23, 26, 80, 95, 124, 126, 130, 131, 132
Visibility 43, 44, 98, 154

W

Waivers 16, 27, 80, 118, 123, 124, 126, 127, 136
Weight 26, 46, 76, 80, 81, 82, 88, 89, 100, 108, 113, 114, 144, 147, 149, 178, 179, 192
Wheel Fans 100
Windows 100, 166
Window Safety Nets 100
Windshield Clips 101
Wrecker 40, 41

Y

Yellow Flag 43, 139, 140

APPENDIX I. 2007 ROLL CAGE RULES

This appendix is present so that cages in cars with logbooks from 2007 and earlier can be verified for compliance with the construction rules required at the time the car was built.

9.4. DRIVER PROTECTION STRUCTURES

These general specifications are for all automobiles. Roll cages are required in all automobiles.

Roll cages may be of two (2) designs, low front hoop (top of steering wheel) or high front hoop (top of windshield). Specific installations are subject to approval by the Technical and Safety Inspectors at each event.

The Technical Staff of Club Racing shall have the responsibility to ensure specification compliance with SCCA safety standards. To that end, the Technical Staff of Club Racing may or may not accept alternate construction standards from any source that significantly vary from SCCA standards of protection.

9.4.1. BASIC DESIGN CONSIDERATIONS

A. The basic purpose of the roll cage is to protect the driver if the car turns over, runs into an obstacle such as a guardrail or catch fence, or is struck by another car. It shall be designed to withstand compression forces from the weight of the car coming down on the rollover structure and to take fore/aft and lateral loads resulting from the car skidding along on its rollover structure.

B. Forward braces and portions of the main hoop subject to contact by the driver's helmet (as seated normally and restrained by seatbelt/shoulder harness) shall be padded with non-resilient material such as Ethafoam® or Ensolite® with a minimum thickness of one-half (1/2) inch. Padding meeting SFI spec 45.1 or FIA 8857-2001 is strongly recommended.

C. No portion of the safety roll cage shall have an aerodynamic effect by creating a vertical thrust.

D. Roll cage or chassis design shall prevent engine intrusion into the driver compartment.

E. Material:

1. Seamless, or DOM (Drawn Over Mandrel) mild steel tubing (SAE 1010, 1020, 1025) or equivalent, or alloy steel tubing (SAE, 4130) shall be used for all roll cage structures. Proof of use of alloy steel is the responsibility of the entrant.

2. Minimum tubing sizes (all Formula, Sports Racing, GT, and Production Category automobiles, and all automobiles registered prior to June 1, 1994) for all required roll cage elements (All dimensions in inches):

Vehicle Weight Without Driver	Material: Mild Steel	Material: Alloy Steel
Up to 1500 lbs.	1.375 x .095	1.375 x .080
1500-2500 lbs.	1.50 x .095	1.375 x .095
Over 2500 lbs.	1.50 x .120 1.625 x .120 1.75 x .095	1.50 x .095

3. Minimum tubing sizes for (all Showroom Stock, Touring and Improved Touring Category auto-mobiles registered after June

1, 1994) for all required roll cage elements (All dimensions in inches):

Up to 1500 lbs.	1.375 x .095 DOM / Seamless / Alloy
1501-2200 lbs.	1.500 x .095 DOM / Seamless / Alloy
2201-3000 lbs.	1.500 x .120 DOM / Seamless / Alloy
	1.625 x .120 DOM / Seamless / Alloy
	1.750 x .095 DOM / Seamless / Alloy

(American Sedans may construct to these specs regardless of weight.)

3001-4000 lbs.	1.750 x .120 DOM / Seamless / Alloy
Over 4000 lbs.	2.000 x .120 DOM / Seamless / Alloy

Note: ERW tubing is not permitted in any car registered after 1/1/2003.

Main hoop: 4 bends max., totaling 180º ± 10º
Front hoop: 4 bends max. or
Front downtubes: 2 bends max.
Rear hoop supports: No bends.

If any of the above bend requirements cannot be met, all components of the roll cage shall be fabricated from the tubing size(s) listed for the next heavier category of automobiles.

4. For purposes of determining tubing sizes, the vehicle weight is as raced without fuel and driver. The minus tolerance for wall thickness should not be less than .010” below the nominal thickness. Improved Touring roll cage tubing size are to be calculated based on the published vehicle weight minus 180 lbs.

5. An inspection hole at least 3/16 inch diameter, but no greater than 1/4 inch diameter shall be drilled in a non-critical area of the front and rear hoop as well as the one of the supplemental braces to facilitate verification of wall thickness. Formula Cars and Sports Racers with alternate roll structures are not required to have inspection holes, the wall thickness will be indicated on the back of the homologation certificate.

F. General Construction

1. One (1) continuous length of tubing shall be used for the main hoop member with smooth continuous bends and no evidence of crimping or wall failure. The radius of bends in the roll cage hoop (measured at centerline of tubing) shall not be less than three (3) times the diameter of the tubing. Whenever possible, the roll cage hoop should start from the floor of the car, and, in the case of tube frame construction, be attached to the chassis tubes by means of gussets or sheet metal webs with support tubes beneath the joints to distribute the loads. It is recommended that gussets be used.

2. Welding shall conform to American Welding Society D1.1:2002, Structural Welding Code, Steel Chapter 10, Tubular Structures. Whenever D1.1 refers to “the Engineer” this shall be interpreted to be the owner of the vehicle. Welds shall be continuous around the entire tubular structure.

   All welds shall be visually inspected and shall be acceptable if the following conditions are satisfied:

   a. The weld shall have no cracks.

   b. Thorough fusion shall exist between weld metal and base metal.

   c. All craters shall be filled to the cross section of the weld.

d. Undercut shall be no more than 0.01 inch deep.

3. Aluminum bronze or silicon bronze welding technique is permitted, but extreme care shall be used in preparation of parts before bronze welding and in the design of the attaching joints.

9.4.2. SHOWROOM STOCK ROLL CAGE

A. Full width roll cages are required in all Showroom Stock automobiles. Roll cages installed in Showroom Stock automobiles are for driver safety and shall be contained entirely within the driver/passenger compartment without removing any panel or accessory not specifically authorized in these rules. The carpet/padding may be cut around the mounting base plates.

1. The cage need not be removable. It shall be bolted and/or welded to the car.

2. It shall attach to the car at no more than eight (8) points, consisting of the basic cage with six (6) points and two optional braces.

3. The forward part of the cage shall be mounted to the floor of the vehicle. In addition, if the two optional braces referred to in item 2, above are utilized they shall be mounted, one on either side, from the forward section of the cage to the firewall or front fender wells (see figure 16). No braces shall pass through the front firewall.

4. Rollcage gussets shall be no thicker than .125”. A maximum of two gussets per rollcage joint are allowed.

B. Removable roll cages and braces shall be very carefully designed and constructed to be at least as strong as a permanent installation. If one tube fits inside another tube to facilitate removal, the removable portion shall fit tightly and shall bottom by design and at least two (2) bolts shall be used to secure each such joint. The telescope section shall be at least eight (8) inches in length except forthe door bars which shall be a minimum of four (4) inches in length. Minimum bolt diameter is 3/8 inches.

C. For tubing sizes for front and main hoop and all required bracing, see 9.4.1.E.3.

Figure 16

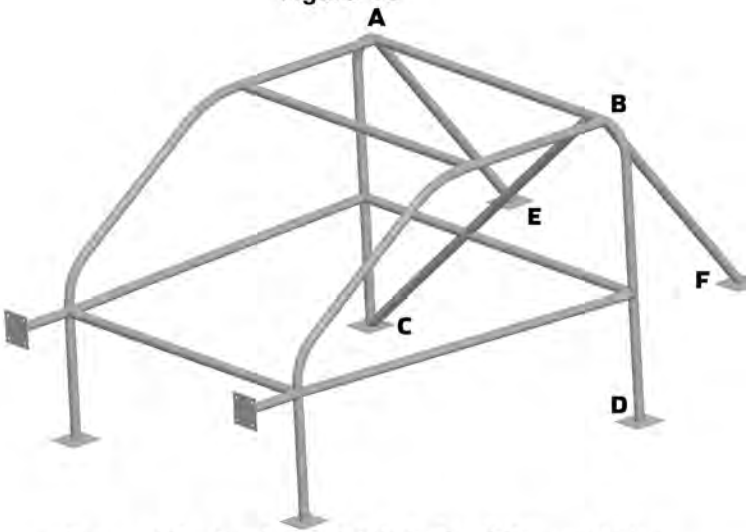

Improved Touring diagonal: tube A-D or B-C is required
Six point minimum, eight point maximum

D. Main Roll Hoop:
   1. Main roll hoop (behind the driver) shall extend the full width of the driver/passenger compartment and shall be as near the roof as possible. It shall incorporate a diagonal lateral brace to prevent lateral distortion of the hoop (See figure 16). Any number of additional reinforcing bars are permitted within the structure of the cage. It is required that the horizontal brace behind the driver's seat (described in Section 9.4.2.J.) continue from the diagonal to the passenger side main hoop upright or that a second diagonal be installed in the main hoop.

E. Front Roll Hoops:
   1. The front or side hoops shall follow the line of the front pillars to the top of the windshield (as close to the roof as possible) then horizontally to the rear attaching to the main hoop. These two side hoops are to be connected together by a tube over the top of the windshield, or

   2. A front hoop following the line of the front pillars and connected by horizontal bars to the main hoop on each side at the top may be used, or

   3. A top "halo" hoop following the roof line from the main hoop to the windshield with forward down tubes following the line of the front pillars to the floor.

   4. The front or side hoops may extend through the dash pad. This includes the forward part of the door panel if it is an extension of the dash panel.

   5. One (1) bar is recommended in a horizontal plane between forward cage braces in the dash area.

F. Bracing:
The main roll hoop shall have two braces extending to the rear attaching

to the frame or chassis. Braces shall be attached as near as possible to the top of the main hoop not more than six (6) inches below the top and at an included angle of at least thirty (30) degrees. On cars where the rear window/bulkhead prohibits the installation of rear braces (e.g., Honda del Sol), the main hoop shall be attached to the body by plates welded to the cage and bolted to the stock shoulder harness mounting points. This installation design must also incorporate a diagonal bar connecting the top of the main hoop to the lower front passenger side mounting point ("Petty Bar").

1. Rear hoop braces may pass through the factory bulkhead or panel separating the driver/passenger compartment from the trunk/cargo area/, fuel tank/fuel cell area, provided the bulkhead is sealed around said cage braces. Metal tape may be used to seal the openings between the bulkhead and the tubes.

G. Side Protection:
Two (2) side tubes connecting the front and rear hoops across both door openings are mandatory. Door side tubes may extend into the door. NASCAR-style side protection, or one bar bisecting another to form an "X" is permitted. The door window glass, window operating mechanism, inner door trim panel, armrest, map pockets, and inside door latch/lock operating mechanism may be removed and the inner door structural panel may be modified, but not removed to facilitate this type of side protection. The stock side impact beam and the outside door latch/lock operating mechanism shall not be removed or modified.

H. Mounting Plates:

1. Each mounting plate shall be at least .080 thick if welded and 3/16" thick (with appropriate backing plates) if bolted. There shall be a minimum of three (3) bolts per mounting plate if bolted.

2. Each mounting plate shall not be greater than 100 square inches and shall be no greater than twelve (12) inches or less than two (2) inches on a side.

3. Whenever possible, mounting plates shall extend onto a vertical section of the structure (such as a rocker box).

4. The mounting plate may be multi-angled but must not exceed these dimensions in a flat plane.

5. Any number of tubes may attach to the plate or each other.

I. Hardware: (Bolts)
All hardware shall be Grade 5 or better. 5/16" minimum diameter.

J. In order to provide a secure seat back support a section of tubing equal to the roll bar shall be installed horizontally from the main hoop upright to the diagonal brace. This tube shall be no higher than shoulder height.

9.4.3. TOURING ROLL CAGE

A. All cars registered after 1/1/03 shall conform to these roll cage rules. Effective 1/1/08 all Touring cars shall conform to these roll cage rules. Full width roll cages are required in all Touring automobiles. Roll cages installed in Touring automobiles are for driver safety and shall be contained entirely within the driver/passenger compartment without removing any panel or accessory not specifically authorized in these rules. The carpet/padding may be cut around the mounting base plates.

1. The cage shall be welded to the car, and all mandatory tubes

shall use welded joint construction.

2. It shall attach to the car at no more than eight (8) points, with the forward section of the cage attaching to the front bulkhead or front fender wells (see figure 16).

3. The front down tubes of the cage shall be mounted to the floor of the vehicle.

B. For tubing sizes for front hoop, main hoop, and all required bracing, see Section 9.4.1.E.3. It is recommended that gussets (flat steel, tubing, etc.) be utilized to strengthen the joints of all required cage elements.

C. Main Roll Hoop:

1. Main roll hoop (behind the driver) shall extend the full width of the driver/passenger compartment and shall be as near the roof as possible. It shall incorporate a diagonal lateral brace to prevent lateral distortion of the hoop (See figure 16). Any number of additional tubes/braces are permitted within the structure of the cage. It is required that the horizontal brace behind the driver's seat (described in Section 9.4.2.J.) continue from the diagonal to the passenger side main hoop upright or that a second diagonal be installed in the main hoop.

D. Front Roll Hoops:

1. The front or side hoops shall follow the line of the front pillars to the top of the windshield (as close to the roof as possible) then horizontally to the rear attaching to the main hoop. These two side hoops are to be connected together by a tube over the top of the windshield, or

2. A front hoop following the line of the front pillars and connected by horizontal bars to the main hoop on each side at the top may be used, or

3. A top "halo" hoop following the roofline from the main hoop to the windshield with forward down tubes following the line of the front pillars to the floor.

4. The front or side hoops may extend through the dash pad. This includes the forward part of the door panel if it is an extension of the dash panel.

5. One (1) bar is required in a horizontal plane between forward cage braces in the dash area.

E. Bracing:

The main roll hoop shall have two braces extending to the rear attaching to the frame or chassis. Braces shall be attached as near as possible to the top of the main hoop but, not more than six (6) inches below the top and at an included angle of at least thirty (30) degrees. On cars where the rear window/bulkhead prohibits the installation of rear braces (e.g., Honda del Sol), the main hoop shall be attached to the body by plates welded to the cage and bolted to the stock shoulder harness mounting points. This installation design must also incorporate a diagonal bar connecting the top of the main hoop to the lower front passenger side mounting point ("Petty Bar").

1. Rear hoop braces may pass through the factory bulkhead or panel separating the driver/passenger compartment from the trunk/cargo area/, fuel tank/fuel cell area, provided the bulkhead is sealed around said cage braces. Metal tape may be used to seal the openings between the bulkhead and the tubes.

F. Side Protection:
Two side protection tubes (door bars) are mandatory on each side of the car. NASCAR-style side protection is required on the driver's side and is optional on the passenger side. The driver's window safety net may be mounted to this side protection and the top cage tube. NASCAR-style side protection tubes shall extend into the door. The door window glass, window operating mechanism, inner door trim panel, armrest, map pockets, and inside door latch/lock operating mechanism may be removed only if it interfered with the installation of NASCAR-style side protection tubes. The inner door structural panel may be modified, but not removed to facilitate this type of side protection. The stock side impact beam and the outside door latch/lock operating mechanism shall not be removed or modified.

G. Mounting Plates:
1. Each mounting plate shall be at least .080 thick.
2. Each mounting plate shall not be greater than 100 square inches and shall be no greater than twelve (12) inches or less than two (2) inches on a side.
3. Whenever possible, mounting plates shall extend onto a vertical section of the structure (such as a rocker box).
4. The mounting plate may be multi-angled but must not exceed these dimensions in a flat plane.
5. Any number of tubes may attach to the plate or each other.

9.4.4. GT ROLL CAGE
All GT automobiles shall have full width roll cages. Open automobiles without full windshields may have a low front hoop. All closed automobiles shall have full height (top of windshield) front hoops.

A. Main and Front Hoops

1. Main Hoop:
The main hoop (behind the driver) shall be full width of the cockpit. The main hoop shall be as near to the roof as possible on closed automobiles and not less than two (2) inches above the driver's helmet on open automobiles, with the driver seated normally and restrained by seat belt/shoulder harness. Low front hoops shall be cowl height, or at a minimum, a straight line drawn from the top of the main hoop to the top of the front hoop shall pass over the driver's helmet.

2. Front Hoop:
a. The front hoop shall follow the line of the front pillars to the top of the windshield and be connected, by horizontal bars, to the top of the main hoop on each side (as close to the roof as possible).
b. Two (2) side hoops following the line of the front pillars to the top of the main hoop may be used. These two (2) side hoops are to be connected by a horizontal bar over the top of the windshield. (See figure 17), or
c. A top "halo" hoop following the roof line from the main hoop to the windshield with forward down tubes following the line of the front pillars to the floor.
d. Double "ear-type" joints are allowed, provided that they are fully welded at all mating surfaces.

Figure 17

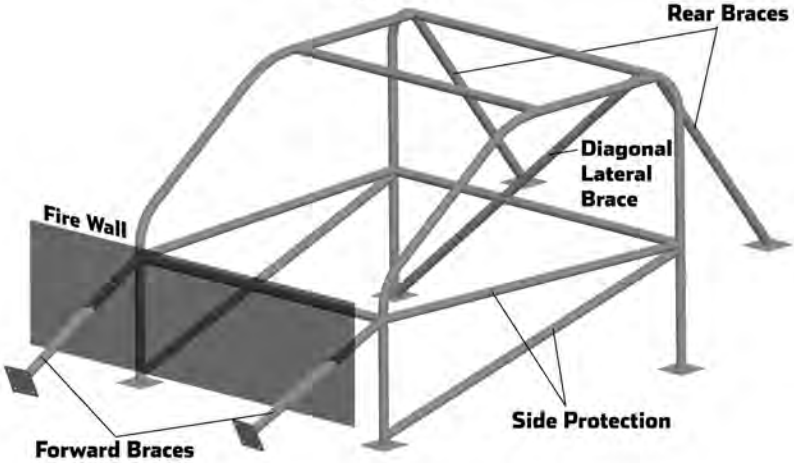

3. Fabrication:
The main hoop shall be one continuous length of tubing with smooth continuous bends with no evidence of crimping or wall failure. The minimum radius for all bends shall be three (3) times the tube diameter measured from the tube centerline. Whenever possible, the roll hoops should start from the floor of the automobile, and, in the case of tube frame construction, be attached to the tubes by means of gussets or metal webs in order to distribute the loads. On automobiles of frameless construction, consideration should be given to using a vertical roll hoop of 360 degrees completely around the inside of the automobile and attached with suitable mounting plates.

B. Bracing
All required bracing shall be the same diameter and wall thickness as listed in 9.4.1.E, Material. (Main and Front Hoops)

All main hoops shall incorporate a diagonal brace (same diameter and wall thickness as main hoop) to prevent lateral distortion of the main hoop.

1. Main Hoop Bracing:
Main hoops shall have two (2) braces extending to the rear, attaching to the frame or chassis. Braces shall be attached as near as possible to the top of the main hoop (not more than six (6) inches below the top) and at an included angle of at least thirty (30) degrees. Open cars with a low front hoop shall have (Effective 1/1/99) two braces extending from the main hoop to the low front hoop. These braces shall be mounted no lower than six inches below the top of the main hoop as illustrated in figure 18.

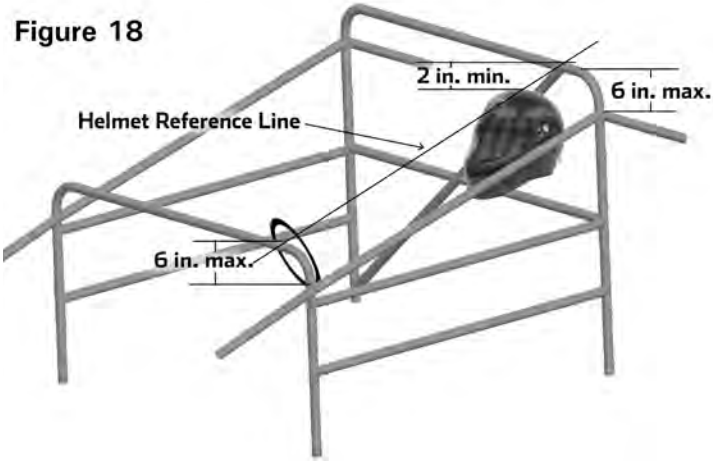

2. Front Hoop Bracing:
There shall be two (2) braces extending forward from the front hoop to protect the driver's legs. It is recommended that this bracing extend to the bulkhead in front of the driver's feet; but, in any case, it shall be integrated into the frame or chassis to provide substantial support for the front hoop.

C. Side Protection - Open and Closed Automobiles

1. The minimum side protection shall consist of a side tube connecting the front and rear hoops across both the door openings. Additionally, there shall also be either a diagonal tube from the front hoop to the rear hoop bisecting the door opening below the horizontal side tube, or not less than two (2) horizontal side tubes. Additional tubing may be added. NASCAR-style door bars are recommended.

2. In automobiles with full roll cage installations including side bars, interior door panels may be altered, replaced, or removed. When door panels are removed, all sharp edges or projections shall be protected.

D. Mounting Plates:
The thickness of mounting plates bolted to the structure of the car shall not be less than the thickness of the roll hoop or brace that they attach and shall be backed-up with a plate of equal dimensions on the opposite side of the panel, with the plates through-bolted together. A minimum of three (3) bolts per mounting plate is required for bolted mounting plates. All hardware (bolts) shall be Grade 5 or better with 5/16" diameter minimum. Mounting plates welded to the structure of the car shall not be less than .080" thick. Whenever possible the mounting plates should extend onto a vertical section of the structure (such as door pillar).

9.4.6. PRODUCTION ROLL CAGE

All automobiles shall have full width roll cages. Roll cages may be of two (2) designs, low front hoop or high front hoop. Specific installations are subject to approval by the Technical and Safety Inspectors at each event. The Technical Staff of Club Racing, with the concurrence of the Club Racing Board, shall have the responsibility to ensure specification compliance with SCCA safety standards. Alternate structures which do not meet the following criteria will not be considered unless they are

eligible under Section 9.4.6.D.

A. Main Hoop
For all cars, the main hoop (behind the driver) shall be full width of the cockpit.

1. Closed Automobiles:
The main hoop shall be as near to the roof as possible on closed automobiles

2. Open top Automobiles:
   a. The main hoop shall be not less than two (2) inches above the driver's helmet on open automobiles, with the driver seated normally and restrained by seat belt/shoulder harness as illustrated in figure 18.

   b. Open top automobiles without a windshield may use an asymmetric main hoop provided:

      i. The main hoop shall be full height (over the driver) for at least 50% of the width of the hoop as illustrated in figure 19.

      ii. On the passenger side of the car, the hoop shall be at least as high as the top of the rear corner of the door as illustrated in figure 19.

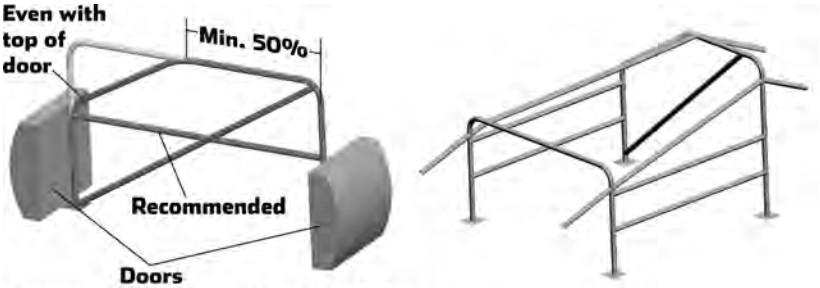

Minimum main hoop - Open Production

B. Front Hoop
For all cars, the front hoop shall be full width of the cockpit.

1. Closed Automobiles and open top automobiles with a windshield:
   a. The front hoop shall follow the line of the front pillars to the top of the windshield and be connected, by horizontal bars, to the top of the main hoop.

   b. Instead of a single front hoop, two (2) side hoops following the line of the front pillars to the top of the main hoop may be used. These two (2) side hoops are to be connected by a horizontal bar over the top of the windshield. (See figure 17)

   c. Another option is a top "halo" hoop following the roof line from the main hoop to the windshield with forward down tubes following the line of the front pillars to the floor.

   d. Double "ear-type" joints are allowed, provided that they are fully welded at all mating surfaces.

   e. It is recommended the hoop extend to the belly pan. If not, it shall be attached to the chassis with gussets and

triangulation in order to spread the loads.

f. It is recommended that the vertical bars of the front hoop be connected by a horizontal bar at a point above the driver's legs

g. All front hoop options (a, b, c) shall be connected to the main hoop in the following manner.
   i. On open top cars, attachments shall be no more than six inches below the top of the main hoop.
   ii. On closed top cars, attachments shall be as close to the roof as possible.

2. Open top Automobiles without a windshield and with a high front hoop design. Front hoop requirements for open top automobiles with a windshield are to be followed with the following exceptions.

   a. Since the windshield frame is to be removed with the windshield, there is no requirement to follow the line of the A-pillar.

   b. Since there is no windshield for the hoop to be above, the front hoop shall be above the driver's line of sight.

3. Open top Automobiles without a windshield and with a low front hoop design

   a. Low front hoops shall be cowl height, or at a minimum, a straight line drawn from the top of the main hoop to the top of the front hoop shall pass over the driver's helmet (See figure 18).

   b. Open cars with a low front hoop shall have two braces extending from the main hoop to the low front hoop. These braces shall be mounted no lower than six inches below the top of the main and front hoops as illustrated in figure 18.

   c. Fabrication - Open and Closed Automobiles
   The main hoop shall be one continuous length of tubing with smooth continuous bends and no evidence of crimping or wall failure. The minimum radius for all bends shall be three (3) times the tube diameter measured from the tube centerline. Whenever possible, the roll hoops should start from the floor of the automobile, and, in the case of tube frame construction, be attached to the tubes by means of gussets or metal webs in order to distribute the loads. On automobiles of frameless or uni-body construction, consideration should be given to using a vertical roll hoop of 360 degrees completely around the inside of the automobile and attached with suitable mounting plates.

C. Bracing - Open and Closed Automobiles
All required bracing shall be the same diameter and wall thickness as listed in 9.4.1.E, Material. (Main and Front Hoop)

All main hoops shall incorporate a diagonal brace (same diameter and wall thickness as main hoop) to prevent lateral distortion of the main hoop. The brace shall either be in the plane of the main hoop or extend from the top of one rear brace (see figure 20) to the bottom of the opposite brace. In the case of braces in the plane of the main hoop, the brace must be attached at both ends to the main hoop, span at least 50% of the main hoop, and at least 75% of the height of the main

hoop.

Figure 20

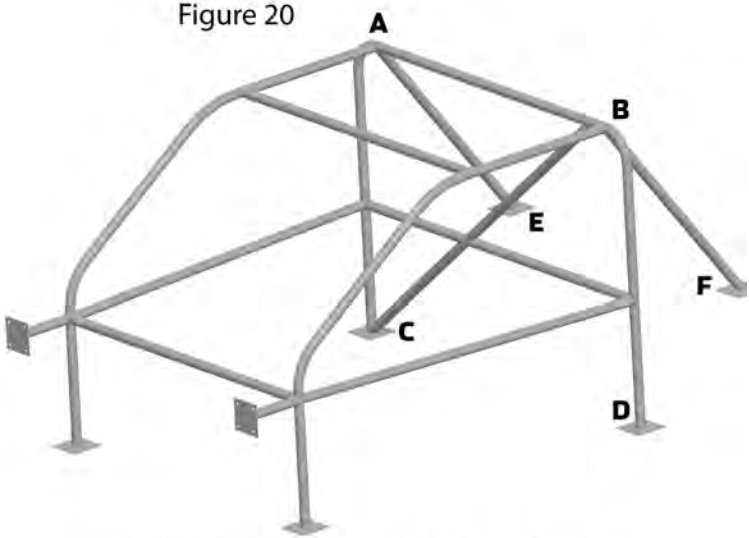

Diagonal brace may run B-C, A-D, A-F or B-E

1. Main Hoop Bracing
Main hoops shall have two (2) braces extending to the rear, attaching to the frame or chassis. Braces shall be attached as near as possible to the top of the main hoop (not more than six (6) inches below the top) and at an included angle of at least thirty (30) degrees. Rear braces may penetrate required bodywork provided the resulting hole serves no other function, and the holes are sealed around the braces.

2. Removable Bracing
Removable bracing shall incorporate connectors of the double lug, tapered, or muff-type as shown in figures 14 and 15. The double-lug type shall include a doubler, gusset, or capping arrangement so as to avoid distortion or excessive strain caused by welding.

3. Front Hoop Bracing
There shall be two (2) braces extending forward from the front hoop to brace the front hoop and protect the driver's legs. It is recommended that this bracing extend to the bulkhead in front of the driver's feet; but, in any case, it shall be integrated into the frame or chassis to provide substantial support for the front hoop. Front braces may penetrate required bodywork provided the resulting hole serves no other function, and the holes are sealed around the braces.

D. Exceptions
When it is manifestly impractical or unsafe to construct and install a roll structure meeting the minimum requirements as set forth above, an alternate design roll structure may be submitted to the SCCA Technical Staff who may, in a proper case, accept such alternate roll structure design on a specific case by case basis.

E. Side Protection - Open and Closed Automobiles

1. The minimum side protection shall consist of a horizontal side tube connecting the front and rear hoops across both the door openings. Additionally, there shall also be either a diagonal tube from the front hoop to the rear hoop bisecting the door opening below the horizontal side tube, or not less than two (2) horizontal side tubes. Additional tubing may be added. NASCAR-style door bars are recommended.

2. In automobiles with full roll cage installations including side bars, interior door panels may be altered, replaced, or removed. When door panels are removed, all sharp edges or projections shall be protected.

F. Mounting Plates:

1. Bolt In cages.

The thickness of mounting plates bolted to the structure of the car shall not be less than the thickness of the roll hoop or brace that they attach and shall be backed-up with a plate of equal dimensions on the opposite side of the panel, with the plates through-bolted together. A minimum of three (3) bolts per mounting plate is required for bolted mounting plates. All hardware (bolts) shall be Grade 5 or better with 5/16" diameter minimum.

2. Welded in cages.

Mounting plates welded to the structure of the car shall not be less than .080" thick. Whenever possible the mounting plates should extend onto a vertical section of the structure (such as door pillar).

9.4.7. APPENDAGES

The following procedures are approved for modification to roll bars/cages that do not meet the two (2) inch required minimum: The old main hoop may be cut off near the chassis mounting and a new main hoop of equal tube size or a section of equal tubing size may be added, and inner tube(s) must be used to mate all sections together. All braces must be minimum distance from top of hoop per Section 9.4. All welding for this modification must be arc welded (min.). The inner tube(s) must be rosette welded three (3) places near top and bottom, see figure 21.

Figure 21

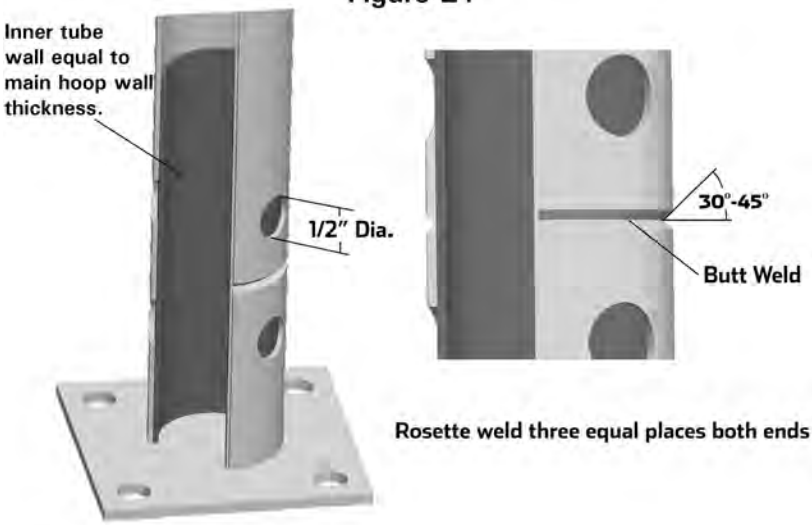

Notes:

APPENDIX J. 2004 PRODUCTION CATEGORY ROLL CAGE RULES

This appendix is present so that cages in Production cars with logbooks from 2004 and earlier can be verified for compliance with the construction rules required at the time the car was built.

18. PRODUCTION ROLL CAGES

All Production Category automobiles shall have full width roll cages. Open automobiles without full windshields may have a low front hoop. All closed automobiles shall have full height (top of windshield) front hoops.

Roll cages may be of two (2) designs, low front hoop (top of steering wheel) or high front hoop (top of windshield). Specific installations are subject to approval by the Technical and Safety Inspectors at each event.

The Technical Staff of Club Racing shall have the responsibility to ensure specification compliance with SCCA safety standards. To that end, the Technical Staff of Club Racing may or may not accept alternate construction standards from any source that significantly vary from SCCA standards of protection.

18.1. BASIC DESIGN CONSIDERATIONS

1. The basic purpose of the roll cage is to protect the driver if the car turns over, runs into an obstacle such as a guardrail or catch fence, or is struck by another car. It shall be designed to withstand compression forces from the weight of the car coming down on the rollover structure and to take fore/aft and lateral loads resulting from the car skidding along on its rollover structure.

2. Forward braces and portions of the main hoop subject to contact by the driver's helmet (as seated normally and restrained by seatbelt/shoulder harness) shall be padded with non-resilient material such as Ethafoam® or Ensolite®, or other similar material with a minimum thickness of one-half (1/2) inch. Padding meeting SFI spec 45.1 is recommended.

3. No portion of the safety roll cage shall have an aerodynamic effect by creating a vertical thrust.

4. Roll cage or chassis design shall prevent engine intrusion into the driver compartment.

5. Material:
   A. Seamless, or DOM (Drawn Over Mandrel) mild steel tubing (SAE 1010, 1020, 1025) or equivalent, or alloy steel tubing (SAE, 4130) shall be used for all roll cage structures. Proof of use of alloy steel is the responsibility of the entrant.

   B. Minimum tubing sizes for all required roll cage elements (All dimensions in inches):

Vehicle Weight Without Driver	Material: Mild Steel	Material: Alloy Steel
Up to 1500 lbs.	1.375x.095	1.375x.080
1500-2500 lbs.	1.50x.095	1.375x.095
Over 2500 lbs.	1.50x.120 1.625x.120 1.75x.095	1.50x.095

   C. For purposes of determining tubing sizes, the vehicle weight is as raced without fuel and driver. The minus tolerance for wall

thickness should not be less than .010" below the nominal thickness.

D. An inspection hole at least 3/16 inch diameter, but no greater than 1/4 inch diameter shall be drilled in a non-critical area of all tubes with a specified size to facilitate verification of wall thickness.

6. General Construction

A. One (1) continuous length of tubing shall be used for the main hoop member with smooth continuous bends and no evidence of crimping or wall failure. The radius of bends in the roll cage hoop (measured at centerline of tubing) shall not be less than three (3) times the diameter of the tubing. Whenever possible, the roll cage hoop should start from the floor of the car, and, in the case of tube frame construction, be attached to the chassis tubes by means of gussets or sheet metal webs with support tubes beneath the joints to distribute the loads. It is recommended that gussets be used.

B. Welding shall conform to American Welding Society D1.1:2002, Structural Welding Code, Steel Chapter 10, Tubular Structures. Whenever D1.1 refers to "the Engineer" this shall be interpreted to be the owner of the vehicle. Welds shall be continuous around the entire tubular structure. All welds shall be visually inspected and shall be acceptable if the following conditions are satisfied:

1. The weld shall have no cracks.
2. Thorough fusion shall exist between weld metal and base metal.
3. All craters shall be filled to the cross section of the weld.
4. Undercut shall be no more than 0.01 inch deep.

C. Aluminum bronze or silicon bronze welding technique is permitted, but extreme care shall be used in preparation of parts before bronze welding and in the design of the attaching joints.

18.4.1. Main and Front Hoops

A. Main Hoop: The main hoop (behind the driver) shall be full width of the cockpit. The main hoop shall be as near to the roof as possible on closed automobiles and not less than two (2) inches above the driver's helmet on open automobiles, with the driver seated normally and restrained by seat belt/shoulder harness. Low front hoops shall be cowl height, or at a minimum, a straight line drawn from the top of the main hoop to the top of the front hoop shall pass over the driver's helmet.

B. Front Hoop:

1. The front hoop shall follow the line of the front pillars to the top of the windshield and be connected, by horizontal bars, to the top of the main hoop on each side (as close to the roof as possible).
2. Two (2) side hoops following the line of the front pillars to the top of the main hoop may be used. These two (2) side hoops are to be connected by a horizontal bar over the top of the windshield. (See figure 17), or
3. A top "halo" hoop following the roof line from the main hoop to the windshield with forward down tubes following the line

of the front pillars to the floor.

4. Double "ear-type" joints are allowed, provided that they are fully welded at all mating surfaces.

C. Fabrication: The main hoop shall be one continuous length of tubing with smooth continuous bends with no evidence of crimping or wall failure. The minimum radius for all bends shall be three (3) times the tube diameter measured from the tube centerline. Whenever possible, the roll hoops should start from the floor of the automobile, and, in the case of tube frame construction, be attached to the tubes by means of gussets or metal webs in order to distribute the loads. On automobiles of frameless construction, consideration should be given to using a vertical roll hoop of 360 degrees completely around the inside of the automobile and attached with suitable mounting plates.

18.4.2. Bracing

All required bracing shall be the same diameter and wall thickness as listed in 18.1.5., Material. (Main and Front Hoops) All main hoops shall incorporate a diagonal brace (same diameter and wall thickness as main hoop) to prevent lateral distortion of the main hoop. A horizontal bar connecting the sides of the main hoop is highly recommended.

A. Main Hoop Bracing:
Main hoops shall have two (2) braces extending to the rear, attaching to the frame or chassis. Braces shall be attached as near as possible to the top of the main hoop (not more than six (6) inches below the top) and at an included angle of at least thirty (30) degrees. Open cars with a low front hoop shall have (Effective 1/1/99) two braces extending from the main hoop to the low front hoop. These braces shall be mounted no lower than six inches below the top of the main hoop as illustrated in figure 18.

B. Removable Bracing:
Removable bracing shall incorporate connectors of the double lug, tapered, or muff-type as shown in figures 14, and 15. The double-lug type shall include a doubler, gusset, or capping arrangement so as to avoid distortion or excessive strain caused by welding.

C. Front Hoop Bracing:
There shall be two (2) braces extending forward from the front hoop to protect the driver's legs. It is recommended that this bracing extend to the bulkhead in front of the driver's feet; but, in any case, it shall be integrated into the frame or chassis to provide substantial support for the front hoop. It is recommended that the verticle bars of the fornt hoop be connected by a horizontal bar at a point above the driver's legs.

18.4.3. Side Protection - Open and Closed Automobiles

A. The minimum side protection shall consist of a side tube connecting the front and rear hoops across both the door openings. Additionally, there shall also be either a diagonal tube from the front hoop to the rear hoop bisecting the door opening below the horizontal side tube, or not less than two (2) horizontal side tubes. Additional tubing may be added. NASCAR-style door bars are recommended.

B. In automobiles with full roll cage installations including side bars, interior door panels may be altered, replaced, or removed. When door panels are removed, all sharp edges or projections shall be protected.

18.4.4. Mounting Plates:

The thickness of mounting plates bolted to the structure of the car shall

not be less than the thickness of the roll hoop or brace that they attach and shall be backed-up with a plate of equal dimensions on the opposite side of the panel, with the plates through-bolted together. A minimum of three (3) bolts per mounting plate is required for bolted mounting plates. All hardware (bolts) shall be Grade 5 or better with 5/16" diameter minimum. Mounting plates welded to the structure of the car shall not be less than .080" thick. Whenever possible the mounting plates should extend onto a vertical section of the structure (such as door pillar).

9.1.1. FORMULA CATEGORY

These specifications are part of the SCCA General Competition Rules (GCR) and all automobiles shall conform with GCR Section 9.

The Formula Category is intended to provide the membership and interested manufacturers with the opportunity to compete in purpose built, highly modified open wheel single seat cars. The Club may alter or adjust specifications and require, permit, or restrict certain specific components to equate competitive potential.

A. FORMULA ATLANTIC PREPARATION RULES

Formula Atlantic is a restricted class. Therefore, any allowable modifications, changes, or additions are as stated herein. There are no exceptions.

New chassis of non-metallic composite construction shall be proven to meet FIA specifications for non-metallic composite chassis prior to being submitted to the SCCA for homologation. Contact the SCCA national office for a list of the relevant FIA specifications/SCCA requirements.

The SCCA shall publish Formula Atlantic Category Specifications containing the basic officially recognized specifications for each car eligible to compete in the Category during the calendar year. These classifications are listed in Table 2.

A.1. General

a. A single seat, four open-wheeled racing car with firewall, floor, and safety equipment conforming to GCR Section 9. Homologation is required for all cars registered after January 1, 1983.

b. Cars shall be equipped with on-board self starter controlled by the driver in a normal driving position.

c. The driver's seat shall be capable of being entered without the removal or manipulation of any part or panel except for a removable steering wheel and/or cockpit padding.

d. Cars shall be equipped with a dual braking system operated by a single control. In case of failure or leak at any point in the system, effective braking power shall be maintained on at least two wheels.

e. Superchargers or turbochargers are not permitted.

f. Power shall not be applied to more than two (2) wheels.

g. Bodywork:

1. No part of the bodywork and aerodynamic devices shall exceed in height a horizontal plane 90cm (35.4") above the ground. The safety roll bar/roll cage and the engine air box are not included in this height restriction. Measurements are to be made as raced with driver on-board.

2. The overall maximum width *of the bodywork* behind the front wheels shall not exceed 130cm (51.18 inches). The maximum width of any aerodynamic device situated behind the *rear wheels*, including the rear wing, shall not exceed 110cm (43.307 inches).

3. The bodywork ahead of the front wheels may be extended to an overall maximum width of 150cm (59.055 inches) provided it does not extend beyond the outside of the front tires. Flex-

ible or movable aerodynamic skirts are prohibited. No part of the body or suspended part of the car shall extend more than 1cm (0.394 inches) below the horizontal plane forming the bottom of the tub or chassis floor (both static or in motion).

4. Any part of the bodywork ahead of the front wheels exceeding an overall width of 110cm (43.307 inches) shall not extend above the height of the front wheel rims.

5. Any specific part of the car which has an aerodynamic influence on the stability of the vehicle shall be mounted on the entirely sprung part of the car and shall be firmly fixed while the car is in motion. Aerodynamic devices, including wings and end plates, shall not extend to the rear more than one meter (39.4 inches) from the centerline of the rear wheel hubs.

6. Neither the safety roll bar nor any of the units associated with the functioning of the engine or transmission shall have an aerodynamic effect by creating a vertical thrust.

7. The leading edge of an airfoil fixed to the front of the car shall not be sharp. Minimum radius -- 0.5cm (0.2 inches).

8. Cars registered with SCCA January 1, 1976, and after, shall be fitted with deformable structures per FIA regulations for Formula II as follows: Deformable Structure: The entire fuel tank area of the car licked by the airstream shall incorporate a crushable structure conforming to the following specifications. The term “licked by the airstream” is considered to define the complete external area of the body/monocoque construction irrespective of such added items as water radiators, inlet ducts, windscreens, etc.

   A. The crushable structure shall be a sandwich construction based on a fire-resistant core of minimum crushing strength of twenty-five (25) lbs./ square inch. Water pipes are permitted to pass through this core. The sandwich construction shall include two (2) sheets of 1.5mm (.060”) thickness, one of which shall be aluminum sheet having a tensile strength of fourteen (14) tons/ square inch and a minimum elongation of five (5) percent.

   B. The use of a magnesium sheet will be authorized only if its thickness exceeds 3mm (.120”).

   C. The minimum thickness of the sandwich construction shall be 10mm (.3937”). The fore and aft fuel tank area, however, shall provide for a crushable structure of at least 100mm (3.937”) thickness at such crushable structure’s thickest point. The position of this widest point to be at the manufacturer’s discretion over a length of at least 35cm (13.78”) after which it may be gradually reduced to 10mm (.3937”).

9. The minimum wheel diameter is thirteen (13) inches. Ex-FSV cars are permitted front wheel width: minimum six (6) inches, maximum eight (8) inches; rear wheel width: minimum eight (8) inches, maximum ten (10) inches. All other cars front wheel width: ten (10) inches; rear wheel width: minimum fourteen (14) inches, maximum fifteen (15) inches.

10. All cars with venturi section side pods (e.g. Ralt RT-4) shall comply to the following rule. Aerodynamic devices shall comply with the rules relating to bodywork. Any part having

an aerodynamic influence and/or any part of the bodywork and attachments to the bodywork shall be rigidly secured to the entirely sprung part of the car (chassis/monocoque), shall have no degree of freedom in relation to the entirely sprung part of the car (chassis/monocoque), and shall remain immobile in relation to the chassis/monocoque at all times. At any transverse section through the car from the rear edge of the front wheels to the forward edge of the rear wheels, no part of the car except the basic chassis/ monocoque structure shall be below a horizontal line situated 1cm (0.4") above the bottom of the chassis/ monocoque. This measurement will be taken without regard to bolt heads, rivets, etc.

Movable or hinged skirts are prohibited. Flexible sidepod skirts are allowed on cars which have their primary load bearing structure (tub) constructed of ferrous or non-ferrous alloys. No part of the bodywork or suspended part of the car between the front and rear wheels shall extend more than one (l) cm (.3937") below the horizontal panel forming the bottom of the chassis. Within the above restrictions, only wearable material (fiberglass, Kevlar, carbon fiber, high density polypropylene, Telflon, Lexan, or wood) may be attached to the side panels as a rubbing strip. Ceramics, plexiglass, plastic, and other materials which shatter or break-up causing hazardous track condition are prohibited.

The intention of this Section (9.1.1.A.1.g.10.) is to control ground effects on all cars by prohibiting "sealing" or bridging the gap between the bodywork and the road surface, and to do so in a uniform and consistent manner. Any means adopted to circumvent this intention shall automatically be regarded as a breach of these regulations.

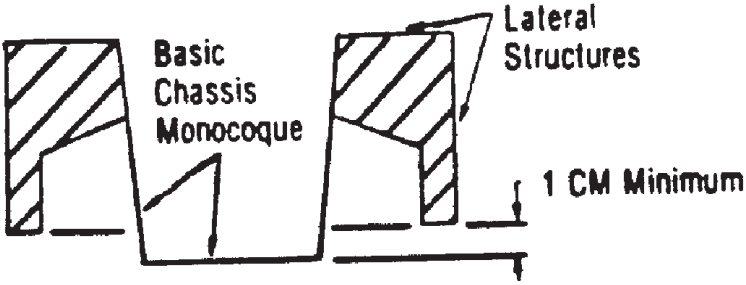

h. Exhaust outlets shall be positioned not more than twenty-four (24) inches above the ground and shall not extend more than six (6) inches beyond the overall length of the car. In no case can the exhaust terminate more than 45.4" behind the centerline of the rear axle.

A.2. Engines

a. *Engines shall be derived from automobiles and may be prepared for competition in accordance with SCCA GT preparation rules, except as specified in the Table below.*

Note: If intake restrictors are specified, the restrictors shall be round orifices (unless otherwise specified) and located within four (4) inches of the throttle butterfly. Restrictors shall be a minimum 0.060" thick and of the specified diameter. *SIR location is unrestricted so long as all SIR criteria are met.*

The following engines are approved:

b. The following modifications are permitted.
   1. Any carburetor(s), fuel injection, or intake manifold(s), are permitted. Fuel injected engines shall use the specified intake restriction. Where Weber or Weber-type carburetors are specified and used, they shall retain their standard configuration of fuel distribution. This is to prohibit annular discharge carburetors.
   2. The use of any exhaust manifold(s).
   3. The use of any oil sump.
   4. The use of any oil pump(s).
   5. The use of a dry sump lubrication system.
   6. The *bore, crankshaft, stroke, and flywheel are unrestricted, providing the appropriate specified displacement limit is not exceeded*, unless restricted in the engine table above.
   7. Main bearing caps may be reinforced or substituted.
   8. The make and location of the ignition coil and condenser may be changed.
   9. Any distributor and/or transistor ignition may be used provided it's installation does not require any modification of the engine.
   10. Any make or type of spark plug may be used.
   11. The use of any starter is permitted provided it can be fitted without any modification to the engine.
   12. Substitution of the clutch and flywheel is allowed provided there is no increase in clutch diameter. The use of dowel pins is permitted.
   13. Any pistons and piston pins may be used.
   14. Any camshaft(s) may be used.
   15. Cam followers may be altered or substituted.
   16. It is permitted to lighten, balance, or modify in shape by tooling the standard or optional components of the engine, provided it is always possible to identify them positively as such. It is not permitted to add any material to the components unless specifically authorized.
   17. The use of any alternate engine components considered replacement parts such as seals, bearings, valve guides, nuts, bolts, studs, washers, and gaskets is allowed, provided they are of the same type and dimension. Bushings may be added where none are fitted as standard, provided they are concentric and that the centerline of the bushed part is not changed. Water and oil passages may be restricted or plugged. The substitution of valve springs, valve spring retainers, and keepers is permitted. Any pushrods may be used.
   18. Pulleys, including camshaft drive pulleys, may be altered or replaced with others of unrestricted origin. The use of any crankshaft vibration dampener is permitted.
   19. The compression ratio may be increased by machining, using

any head gasket(s), or eliminating of head gasket(s).

20. The installation of any engine vent or breather is permitted.
21. Generator or alternator is unrestricted.
22. The use of any rocker arms or rocker arm supports.
23. Use of any connecting rod of the same basic material.
24. Valves are unrestricted in both size and material, provided the valve centerline is not altered.
25. Exhaust emission control air pumps, and associated lines and nozzles cannot be modified in any way except they may be completely removed. When these nozzles are removed from a cylinder head, the holes shall be completely plugged.
26. The use of any fuel pump(s) is permitted.
27. Valve or cam covers may be substituted.
28. Any external surface of the engine may be plated, painted, or anodized.
29. Engines produced with a cam carrier as a separate and distinct piece from the cylinder head or engine block may replace that cam carrier with a cam carrier of other manufacture, provided the replacement cam carrier affords no additional function other than the original cam carrier and provided the type and number of camshaft bearings remains the same.
30. The replacement of any jack shaft or idler shaft with another of the same basic material as the standard shaft is permitted, provided it performs no additional function over the original shaft.

A.3. Transmission

a. For all types of transmissions, no more than five forward speeds and an operational reverse gear shall be used.

b. The use of an automatic gearbox is prohibited.

c. All gear changes shall be initiated by the driver. Mechanical gear shifters, direct-acting electric solenoid shifters, air-shifters and similar devices are permitted. Electronically controlled differentials and devices that allow pre-selected gear changes are prohibited.

d. Gearboxes with shafts that are transverse to the longitudinal axis of the chassis are not allowed. The sole exception are the gearbox final drive (crownwheel) shaft axis and final drive shafts (half shafts). All change gears must be located in the case aft of the final drive.

Table 1

Spec Line	Engine Series	Max. Displ. (cc)	Max. Valves / Cyl.	Notes	Req'd Restrictor	Min. Weight (lbs)
A	4 Cylinder 4 Cycle	1615	2		n/a	1160
B	4 Cylinder 4 Cycle	2135	2		n/a	1190
C	4 Cylinder 4 Cycle	1615	4		n/a	1230
D	4 Cylinder 4 Cycle	2500	2	Under 2000cc, unrestricted; under 2500cc, 33mm SIR required, except less than 9:1 CR, unrestricted.	See SIR requirement in Notes.	1230
E	4 Cylinder 4 Cycle	2500	4	Under 2000cc, 33 mm SIR required except under 10:1 CR, unrestricted; under 2500cc, 31mm SIR required except under 9:1 CR, unrestricted.	See SIR requirement in Notes.	1230
F	Mazda 12A Rotary	n/a	n/a	no peripheral port or bridgeport	n/a	1230
G	Mazda 12A Rotary	n/a	n/a	Bridgeport. One (1) auto-type 2 bbl carb or one (1) 2 bbl throttle body. Restrictors/ venturis shall be no more than 4 inches from the center line of the throttle butterfly shaft. All intake air shall pass through the required restrictors and the throttle body or carburetor body. Intake manifold for either carburetion or injection shall have individual runners connecting one throttle plate to one rotor, only. No balance tubes or other device shall connect runners between rotors.	36mm	1230
H	Mazda 13B Rotary	n/a	n/a	Streetport. One (1) 2-bbl auto-type carb or throttle body. Intake manifold shall have individual runners connecting one throttle plate/butterfly to one rotor, only. No balance tubes or other devices shall connect runners between rotors.	44mm	1230
I	Mazda 13B Rotary	NA	NA	Peripheral Port	38mm SIR	1230
J	Mazda Renesis Rotary	n/a	n/a	Porting not permitted. Unmodified OEM lower intake manifold required, upper manifold unrestricted. Balance tube not permitted. Apex seals unrestricted. Fuel injection only.	70mm Throttle Body.	1230

The following additional notes apply to all engine spec lines in this table.
Note 1: Add 25 lbs for sequential transmission.
Note 2: Add 25 lbs for fuel injection (except Volkswagen).
Note 3: Add 25 lbs for non-metallic chassis.

Table 2

Car	Engine	Wheel Width (in) ± .060	Aero	TransmissAeroon	Weight	Notes
Purpose built and Ex-Pro Atlantic cars	**See Table 1**	**(F) 10 (R) 14 Min. & 15 Max.**	**See FA rules**	**Up to 5 forward gears, limited slip and locked differential allowed (sequential trans. carries 25 lb penalty**	See Table 1	**All current FA rules apply**
Pro Star Mazda	Mazda rotary - Sealed Renesis with Pro Star Mazda Fuel injection and a 70 mm throttle body	Pro Star Mazda specified series wheels (F) 9 (R) 11	See Table 3	6 spd sequential transmission with open differential. Traction control is allowed. Spec Gear Ratio Stacks (no mixing) apply. Pro Star Mazda Gear Stacks:Stack A: 1st-12/29, 2nd-15/30, 3rd-15/25, 4th-19/27, 5th-20/25, 6th-19/21. Stack B:1st-12/29, 2nd-17/30, 3rd-19/27, 4th-18/22, 5th-24/26, 6th-24/24.	1325	Front Wing - Angle of attack for the front wing (main plane) is fixed. Front wing flaps may be adjusted within the range provided from an original STAR Mazda endplate. Secondary wing flaps may not be altered from STAR Mazda original part. Rear Wings - May be adjusted to include the following: Angle of attack of the lower element. Note: Rear wing endplates must be adjusted to within +/- 5 deg of vertical as measured at the trailing edge of the endplate. All Cars must use all three upper elements. Angle of attack of the upper elements must have a minimum angle of 13 degs measured front the leading edge of the forward element to the rear edge of the trailing element. The zeroing point for checking the angle of the top three elements is the rollover block on the forward edge of the cockpit opening. No gurney tabs. ECU and Shocks shall be sealed as provided by Star Mazda. Engine shall be sealed by the Star Mazda approved engine builder or Daryl Drummond Enterprises, Inc.
Formula 3 car	1600 VW (non Crossflow head) or 1835cc Volkswagen with carbs (no restrictor), FI with 37mm restrictor located between cylinder head and butterfly	(F) 9 Min. (R) 10 Min.	See FA Rules	Up to 5 Forward Gears, Limited Slip Differential (sequential Carries a 25 lb Weight Penalty)	See Table 1	NOTE: Any other classified engine must be approved by the SCCA Club Racing Technical Manger on a case by case basis. Alt block and crankshaft allowed with max. displacement of 2135cc, valve lift (measured at zero lash): .500" max.
Ex-Fran-Am 2000	Renault 2.0L with Magneti-Marelli Renault Sport Formula Renault 2000 ECU	(F) 8 (R) 10	See FA Rules	Renault Sport Formula 2000 6 Speed sequential transmission with limited slip differential. Gear ratios unrestricted.	1250	Must have roll bar meeting the requirements of GCR 9.4. Must use Formula Renault or Fran-Am engine seals on the cam cover, oil pan and crankshaft pulley bolt as applied by an approved engine builder. An SIR will be required at a time to be determined by the CRB.
Ex-Pro Formula Super Vee	1600 VW (non Crossflow head) or 1835cc Volkswagen with carbs (no restrictor), FI with 37mm restrictor located between cylinder head and butterfly	(F) 6 Min. (R) 8 Min. or (F) 8 Min. (R) 10 Min.	See FA Rules	Up to 5 Forward Gears, Limited Slip and Locked Differentials allowed (sequential transmission carries a 25 lb Weight Penalty)	See Table 1	Water cooled Super Vee cars compete in the FA class and may be prepared to their professional racing rules. GT engine prep rules, no changes in bore x stroke, unrestricted weber type side draft carburetors with no modifications. These cars can also run the present fuel injection with these engine prep rules.
Pro Formula F 2000	2.0 Liter Zetec	(F) 8 Max (R) 10 Max	See FA Rules	Up to 5 Forward Gears, Limited Slip Differential (sequential Carries a 25 lb Weight Penalty)	1230	Engine must be prepared to current FC rules except that ECU map and cams are unrestricted. An air restrictor is not required.

Table 2

Swift 016	2.3 liter Mazda Duratec	(F) 10 (R) 14 Min. & 15 in Max	See notes	5 speed sequential	1420	Drivers must have a copy of Appendix A provided by Swift Engineering available to present to Tech at their request **Engine:** *The 2.3 Liter Mazda Duratec engine and ECU is unrestricted with the exceptions that a 32mm SIR must be used with a sealed air box (part no. FA11016INT) supplied by SCCA Enterprises, the maximum compression ratio is 14.0:1, and the maximum displacement is limited to 2266cc.* **Dimensions:** Wheel Base: 109.3 inches (277.6 cm) Overall Length: 177.1 inches (449.8 cm) Overall Width: F: 76.0 inches (193.0 cm) R: 75.8 inches (192.5 cm). The overall width will be measured at the wheel hub center by projecting a vertical plane from the widest outside rim surface. **Other Dimensions:** Reference Appendix A illustrations provided by Swift Engineering. All dimensions of the car within this table and Appendix A shall have a tolerance of + or - 0.2 inches. The bodywork may not be modified in shape or size; however, replacement bodywork may be supplied by sources other than Swift. *Exception: In Appendix A illustrations 1 and 3 the un-dimensioned camera mount on the roll bar above the 37.83 height dimension may be removed. If the camera mount is removed the faring must be re-shaped to continue the contour lines of the roll bar below the 37.83 height dimension.* **Wings:** The wings and end plates may not be changed. The wings must have a Swift label visible on each wing showing the following part numbers: front wing (part no. 01612-0010), front flaps (part no. 01612-1021LorR), lower element, rear wing (part no. 01613-0010), and upper element, rear wing (part no. 01613-0013). All wings must conform to the wing angles and dimensions specified in the Appendix A illustrations provided by Swift Engineering. **Rear Wing Top Element:** The rear wing top element may be adjusted within the designed range of +2.00 to +16.00. Front Wing Main Plane and Rear Wing Lower Element At all times, the front wing and lower rear wing element must be maintained at the designed angle (as seen in illustrations 4 and 5 of Appendix A provided by Swift Engineering) relative to the chassis zero line. **Wickers:** Wickers/gurneys may be added to the top of the trailing edge of the front flaps, front main plane, and rear wing lower elements only, and may not be used on the rear wing upper element. They must be 90 degrees to the mounting surface and may be no more 0.500 inch high as measured from the upper surface of the wing element. Wicker/gurney height must remain constant across the width of the individual component span. No saw tooth wickers/gurneys are allowed. The trailing edge of wings and flaps may be drilled for the purposes of attaching wickers/gurneys. All wing angles shall have a tolerance of + or - 0.30. Shocks absorbers must be Dynamic Suspension Model DSSV with S5 and S6 valving in the front shock absorbers and S3 and S4 valving in the rear shocks absorbers.

Pro Formula Mazda Dimensions - Table 3	
Dimension (Refer to FC drawing)	**Measurement (cm)**
A. Maximum rear overhang from rear wheel axis "(not including the approved Star Mazda rear impact attenuator or the approved Star Mazda/Super Trapp Club Racing muffler assembly)	60
B. Maximum front overhang from front wheel axis	102
C. Maximum height measured from the ground	99 @ rear wing
D. Exhaust height measured from the ground	34-53
E. Maximum height of any aerodynamic device	35
F. Minimum safety rollover bar height inline with driver's spine	92
G. Minimum allowed helmet clearance	5
H. Maximum width	180
I. Maximum rear aerofoil width (includes endplates)	100
J. Maximum body width behind front wheels	132
K. Maximum nose width	**141**
L. Minimum cockpit opening	**37**
M. Minimum cockpit parallel opening length	**42**
N. Minimum cockpit overall opening length	**82**
S. Maximum exhaust length from rear wheel axis	**77**
7. Minimum wheelbase	**254**
5. Minimum track	**150**

B. FORMULA CONTINENTAL PREPARATION RULES

Formula Continental is a Restricted class. Therefore, any allowable modifications, changes, or additions are as stated herein. There are no exceptions. IF IN DOUBT, DON'T. Homologation is required for all cars registered after January 1, 1983.

Description: Single seater racing cars as defined by these regulations.

All newly constructed cars shall meet the 1986 construction rules for Formula Ford cars as revised January 1, 2010, except as allowed in these Formula Continental preparation rules.

B.1. Chassis
The chassis shall be of tubular steel construction with no stress-bearing panels except bulkhead and undertray; curvature of the undertray shall not exceed 2.54cm (1 inch). Monocoque chassis construction is prohibited. Stress bearing panels are defined as: sheet metal affixed to the frame by welding, bonding, rivets, bolts, or screws which have centers closer than 15.24cm (6 inches). Body panels cannot be utilized as stress bearing panels, except as required for 1986 construction rules. The use of composite materials using carbon and/or Kevlar reinforcement is prohibited.

No engine oil or water tubes are permitted within the cockpit.

It is not permitted to construct any suspension member in the form of an asymmetrical airfoil or to incorporate a spoiler in the construction of any suspension member. Symmetrical streamlining of suspension members is permitted.

B.2. Bodywork and Airfoils
See Table 4. (Airfoils are a requirement for this class.)

The use of composite materials using carbon reinforcement is prohibited, except as permitted herein.

The use of "ground effects" is limited. Deviation of the undertray may not exceed 2.54cm (1") in the area between the rearmost point of the front tire to the frontmost point of the rear tire. Diffuser undertrays are permitted.

Cockpit: Forward-facing roll bar/roll cage bracing and required padding will not be considered in the dimensions shown in the table.

B.3. Engines
The only permitted engines are:

The Ford 2 liter single overhead camshaft "NE" series engine or the 1971-74 Pinto/Capri 2 liter single overhead camshaft engine.

The Ford Zetec ZX3 2 liter dual overhead camshaft engine (see section B.4.)

The Ford 2 liter single overhead camshaft "NE" series engine and the 1971-74 Pinto/Capri 2 liter single overhead camshaft engine shall conform to the following specifications. The nominal bore is 90.84mm and the nominal stroke is 76.95mm (Note: All blocks shall contain casting number HM6015BA, HM6015AA, HM6015BB, HM6015AB, HM6015DA, or HM6015AD. Dashes in the casting number are not relevant.). Production tolerances are permitted providing the total swept volume does not exceed 2000cc.

a. The rockers shall remain entirely unmodified. Alternate manufac-

turers may be used as long as the original materials and dimensions are the same. Camshafts must be from Ford Motor Company, or Crower part #E57553 FF2000, *or any camshaft that is a replica of the original and of the same material may be used*. Camshaft geometry shall be stock. *An alternate optional camshaft, Elgin part number 2000FC, may be used only in the original iron head.* Regrinding camshaft lobes is permitted as long as the camshaft lobe center is 112° ± 2°. Offset keys are permitted. Tuftriding or Parkerizing is permitted. Maximum valve lift at determined points by camshaft rotation will be established. The use of a low rate substitute valve spring is permitted. Load characteristics of special checking spring: twelve (12) lbs., at 1.417 inches, thirty (30) lbs., at 1.000 inches. An adjustable camshaft sprocket which retains the same number of teeth and pitch as the stock sprocket may be used.

b. *A standard crankshaft shall be used or any crankshaft that is a replica of the original crankshaft and of the same material may be used.* Spot machining to achieve balance is permitted. Tuftriding, Parkerizing, shot peening, shot blasting, and polishing are permitted. Minimum weight: twenty-seven point five (27.5) lbs.

c. The flywheel shall be a standard component or the approved alternate Elite-001. The minimum weight is *10.5* lbs. with ring gear. The flywheel may be machined to achieve minimum weight. Spot machining to achieve balance is permitted. Flywheel bolts are free and locating dowels are permitted. A 1600 GT starter ring may be fitted. The use of any single plate clutch is permitted provided no modification is made to the flywheel other than changing the points of attachment of the clutch to the flywheel. Carbon fiber clutches are not permitted.

d. Maximum compression ratio will be controlled as follows:

   1. Minimum Cylinder Head combustion chamber volume 49cc (not including head gasket). Polishing and/or tooling of the cylinder head to achieve only the required combustion chamber volume is permitted.

   2. Standard Ford gasket, Fel-Pro #8361PT, or Ferrea part number G50100 may be used. Gaskets will have a minimum thickness of 0.9mm, minimum diameter of cylinder aperture of 92mm.

   3. Pistons shall not protrude above cylinder block surface at TDC.

e. It is permissible to reshape inlet and exhaust port by removal of metal within limits. Addition of material in any form is prohibited. Maximum diameter of inlet port at manifold head face 39.5mm. Maximum dimensions of exhaust port at manifold face 35.5mm x 27mm. The distance between the valve centers and the angles of the valves shall not be altered.

f. Pistons shall be standard Ford Mahle, AE Hepolite, CP, or J&E. Pistons must be unmodified in any way except for balancing and as detailed herein.

   The following combinations are permitted:

   1. Mahle piston P/N 80HM6102LA with rings, pin, connecting rod (with bolts), but without bearings:Minimum permitted weight = 1332.5 grams.

   2. Mahle piston P/N 85HM6102DA with rings, pin, connecting rod (with bolts), but without bearings: Minimum permitted

weight = 1240 grams.

NOTE: This piston may have either casting #90V108 or #90V118.

3. AE Hepolite piston P/N 21426, casting P/N 21426 (AE Hepolite) with rings, pin, connecting rod (with bolts), but without bearings: Minimum permitted weight = 1240 grams.

4. CP piston P/N IV 2.0 LTR with rings, pin, connecting rod (with bolts), but without bearings: Minimum permitted weight = 1240 grams. Part number and Ivey logo stamped on wrist pin bosses.

5. JE piston P/N M-6102-B200 with rings, pin, connecting rod (with bolts), but without bearings: Minimum permitted weight = 1240 grams.

NOTE: M-6102-B200 piston assembly is now made by JE and is visually different. I.D. Marks: M-6102-B200, Ford racing logo. All marks pin stamped on wrist pin bosses.

Rings are unrestricted provided that:

A. One oil control and two compression rings are used.

B. No modification is made to the piston for the installation of the rings.

Localized machining of the gudgeon pin bosses to achieve balance and weight by simple machining; all external surfaces, dimensions, and profiles shall remain standard with the exception of the top surface of the piston crown which may have simple machining to achieve balance, and as required in Section 9.1.1.B.3.d.

g. Valves may be of Ford manufacture or Ferrea part numbers VSOIN200 and VSOEX2000. Valves shall remain standard; no reprofiling or polishing is permitted.

The original forty-five (45) degree seat angle shall be maintained.

Maximum face diameter inlet 42.2mm.

Maximum face diameter exhaust 36.2mm.

Maximum valve stem diameter 8.4mm.

h. Full connectng rods may be standard Ford, Cosworth, Oliver, or Crower. The approved Crower part numbers are SP93230B-4 or SP93230PF-4. Any rod bolts may be used. Floating piston pins may be used. Standard rod length must be 5.00 inches (+.005” -.010”). Machining is permitted to remove metal from the balancing bosses to achieve balance only. Tuftriding, Parkerizing, shot peening, shot blasting, polishing, etc., are permitted.

i. Maximum valve lift against cam angle with zero tappet clearance: (Lift measured in mm)

Standard Camshaft				
	Intake		Exhaust	
Angle	Opening	Closing	Opening	Closing
0	10.442	10.442	10.442	10.442
5	10.36	10.36	10.36	10.36

10	10.11	10.11	10.11	10.11
15	9.69	9.69	9.69	9.69
20	9.11	9.11	9.11	9.11
25	8.37	8.37	8.37	8.37
30	7.45	7.45	7.45	7.45
35	6.38	6.38	6.38	6.38
40	5.17	5.17	5.17	5.17
45	3.86	3.86	3.86	3.86
50	2.59	2.58	2.58	2.59
55	1.5	1.47	1.47	1.5
60	0.86	0.81	0.81	0.86
65	0.65	0.56	0.56	0.65
70	0.54	0.43	0.43	0.54
75	0.46	0.33	0.33	0.8
80	0.37	0.19	0.19	0.37
85	0.26	0.08	0.08	0.26
90	0.2	0.01	0.01	0.2

Alternate Camshaft				
	Intake		Exhaust	
Angle	Opening	Closing	Opening	Closing
0	11.182	11.182	10.149	10.149
5	11.102	11.092	10.07	10.071
10	10.853	10.821	9.831	9.829
15	10.423	10.363	9.426	9.415
20	9.821	9.721	8.854	8.826
25	9.069	8.916	8.117	8.073
30	8.177	7.955	7.205	7.154
35	7.131	6.85	6.132	6.071
40	5.96	5.624	4.92	4.866
45	4.702	4.313	3.611	3.6
50	3.425	3.01	2.346	2.38
55	2.242	1.851	1.325	1.406
60	1.278	0.994	0.722	0.825
65	0.642	0.509	0.488	0.604
70	0.334	0.307	0.385	0.524
75	0.215	0.208	0.303	0.461
80	0.134	0.13	0.224	0.404
85	0.064	0.063	0.146	0.343
90	0.022	0.024	0.09	0.279

j. Engines will be mounted upright, and aligned fore and aft in the

chassis.

k. A single carburetor only will be used on a standard inlet manifold. The carburetor will be a Weber 32/36 DGV 26/27mm venturi, its origin being from a 1600 GT "Kent" or 2000 SOHC NE engine. The Holly 5200 32/36 carburetor also may be used; carburetor with the swaged fuel inlet fitting shall be replaced by drilling and tapping the carburetor body for a threaded fitting. The air cleaner may be removed and a trumpet fitted, and jets may be changed, both throttles may open together, cold start devices and diffused bar may be removed, internal and external antisurge pipes may be fitted, and seals on emission control carburetors may be removed. The bottom of the lower column portion of the auxiliary venturi may be machined for purposes of high speed enrichment. No other modifications are permitted. Chokes (venturi) shall remain standard and no polishing or profiling is permitted.

l. The addition of material by any means to any component is prohibited.

m. It is permitted, as a means of repair, to replace damaged valve seats and cylinder bores by replacement cast iron valve seat inserts and cast iron cylinder liners; valve guides may be replaced with cast iron or bronze, all to standard dimensions. Repairs to the cam towers to facilitate replacement of cam bearing and/or replacements of broken or cracked towers is permitted as long as the cam bearing center line is not changed and that one original cam tower is retained. Line boring of cam bearing caps is permitted.

n. Balancing of reciprocating and rotating parts is permitted only by removal of metal from locations so provided by the manufacturer.

o. Non-standard rocker covers are permitted providing they in no way improve the performance of the engine.

p. Standard valve spring retainers shall be used, and single valve springs only are permitted. Shims are permitted, and valve springs are otherwise free.

q. Exhaust system and manifold are unrestricted, within SCCA safety regulations.

r. Lubrication system is unrestricted; dry sump is permitted. Localized machining of the cylinder block is permitted to allow fitting of the oil pump.

s. Oil coolers are unrestricted.

t. Cooling system unrestricted. The radiator, if housed in or incorporating a cowl air-scoop deflector, shall comply with body regulations.

u. Fuel Pump: Unrestricted.

v. Distributors are unrestricted providing they retain the original drive and location. The distributor is defined as the component which triggers the L.T. current and distributes the H.T. current. The Ignition Timing may only be varied by vacuum and/or mechanical means. It is prohibited to use any other method or component to trigger, distribute, or time the ignition.

w. Only the standard inlet manifold shall be used.

The ports may be reshaped by the removal of metal as long as the following dimensions are maintained: maximum size at head face = 1.437" (36.5mm), maximum size at carburetor flange = 3.405"

(86.5mm) x 1.595" (40.5mm). The carburetor seat face may be machined to horizontal in the fore to aft plane. The diameter of the ports may exceed the above listed dimensions if the casting bore is untouched and in its original state. The water passages in the inlet manifold may be plugged. Holes in the inlet manifold resulting from the removal of emission/vacuum lines shall be plugged.

x. Gaskets and seals are unrestricted except for the cylinder head gasket that has the requirements listed in B.3.D.2. and the intake gasket. The intake gasket thickness must not exceed 1.1mm. Intake gasket is not to be construed as a spacer.

y. Pump, fan, and generator drive pulleys are unrestricted.

z. The crankcase breather may be altered or removed, but all breathers shall discharge into a catch tank.

aa. Mechanical tachometer drives may be fitted.

bb. Generators are optional.

cc. Standard oversize and undersize bearings are permitted. This does not allow reducing the bearing surface area by reducing the width of standard bearings.

dd. The use of non-standard replacement fasteners (nuts, bolts, screws, studs, and washers) which are not connected with or which do not support the intake manifold or any moving parts of the engine is permitted.

ee. Only modifications or additions specifically covered by these regulations are permitted. All engine components not covered by these regulations shall remain completely standard and unmodified. When a system is specified to be "unrestricted" (e.g. paragraphs r and t), the restrictions of this paragraph do not apply.

ff. The use of the Fast Forward aluminum cylinder head is permitted. The following dimensions must be maintained.

Intake port maximum volume	70.0 cc.
Exhaust port maximum volume	52.0 cc.

Intake port surface to exhaust port surface 5.580 +/- 0.020 inches

Intake valve center line to (adjacent) intake valve center line 4.015 +/- 0.015 inches

Exhaust valve center line to (adjacent) exhaust valve center line 4.015 +/- 0.015 inches

The machine tool marks in the intake and exhaust ports must remain untouched for 0.750 inches from the respective gasket surfaces.

gg. Any spark plugs may be used.

B.4. Engines - Zetec

The Ford Zetec ZX3 engine shall conform to the following specifications and may be modified only as specifically allowed. If these specifications do not explicitly allow a modification, then it may not be done. The philosophy of the Zetec engine in FC is to allow limited engine rebuilds but no performance modifications to the engine. Blue printing, balancing, head porting, polishing, etc. are strictly prohibited and against the spirit of the Zetec formula. Where Ford part numbers are specified, normal industry part number supersession is expected and the superseding part numbers are automatically included.

a. The cylinder head may not be ported *or* polished. *Machining the cylinder head is not permitted except as specified in these rules.* A standard three-angle "production" valve job is required and the only allowed angles are those defined in the Ford factory manual. The intake valve seats must be 30° 45° 70° with the 45° face a minimum 1.5 mm wide. The exhaust valve seats must be 30° 45° 55° with the 45° seat 1.5 mm wide minimum. The camshaft, valves, springs, and shim/bucket components must be original Ford parts and may not be modified in any way. Only original unmodified Ford parts may be used for direct replacement. The camshafts must remain as ground by Ford; no polishing is permitted. Valve seats may not be replaced. The head may not be surfaced or milled beyond the minimum thickness of 5.230" measured between the cam cover seating surface and the lower plane of the head. Only the Ford #RFYS4E6090AC or RFYS4E6090AD head is allowed. The only allowed camshafts are the Ford #L913B YSAA intake and #L913B C2B exhaust. The original, unmodified Ford camshaft and crankshaft timing pulleys must be used. Required camshaft timings are as follows:

Intake centerline	116-117 degrees ATDC
Exhaust centerline	106-107 degrees BTDC

b. Pistons, crankshaft, and rods may be replaced only with standard original Ford replacement parts. The crankshaft may be ground or polished for the purpose of installing oversize main or rod bearings. The rod journals must remain stock and the rods may not be bored or remanufactured in any way. The rod and crankshaft bearings may be replaced only with original or oversized Ford bearings. The required original crankshaft main bearing journal dimension is 2.282-2.283 inches and the required original crankshaft rod journal dimension is 1.846-1.847 inches. The corresponding main journal dimensions for oversized bearings are either 2.273-2.274 inches or 2.263-2.264 inches; the corresponding rod journal dimensions for oversized bearings are either 1.837-1.838 inches or 1.827-1.828 inches. The crankshaft centerline to deck dimension is 8.378 inches and may not be altered. The main bearing housing bore is 2.452-2.453 inches and the rod housing bore is 1.9642-1.9650 inches. Only original Ford rod bolts with a minimum weight of 24.6 grams or ARP rod bolts with a minimum weight of 23.5 grams may be used.

c. Only original stock Ford replacement piston rings may be used. The ring end gaps may not be altered and must remain as manufactured by Ford. All of the rings must be installed including the complete oil scraper assembly. The piston bore may be honed solely to allow piston ring seating. The first and second compression rings must be installed in the positions designated by Ford.

d. All surfaces on the head, block, rods, pistons, and crankshaft must remain as manufactured by Ford and may not be altered in any way. The original casting marks and cast surfaces must remain as-cast and also meet all of the Ford design values and tolerances as stated in the Ford factory manual or as delineated in these specifications. The block may not be decked. Only Ford Zetec ZX3 blocks with block numbers #RFYS4G6015AA, or #RFYS4G6015AD or #RFYS4G6015AE are permitted. The required compression ratio is 9.6:1, the required standard bore is 3.3390 – 3.3410 inches and the required stroke is 3.461 inches. The maximum bore dimension of 3.3410 inch is intended to allow for cylinder wear only. It is not permitted to machine to this dimension. This measurement will be

taken .250 below the block deck where the bore is untouched by the piston ring.

e. Flywheel: The minimum weight is 8.0 lbs. and any weight removal from the specified flywheel must come from the clutch plate surface. Only the Quarter Master #QM107160 flywheel may be used.

f. Any 7¼ inch single plate or double plate, non-carbon fiber clutch is allowed.

g. Any oil pan is allowed. The oil pan may not contain an oil scraper between the oil pan and the block. No device in the oil pan may be contoured to the crankshaft assembly to function as an oil scraper nor may any device be closer to the rotating crankshaft assembly than 0.5 inches.

h. Any three-stage oil pump with a maximum of two scavenge stages is allowed. The maximum scavenge rotor dimensions are 1.600 inches in diameter and 1.375 inches in length. The minimum pressure rotor dimensions are 1.600 inches in diameter and 0.863 inches in length.

i. The exhaust system manifold tubing OD must be 1.5 inches and the manifold tubes must be a minimum of 24 inches in length and must terminate into a single exhaust pipe through a 4 into 1 collector. The collector angles must be the standard 15 degree bend, (30 degree included angle) with an exit diameter of 2 inches. The tail pipe must be a minimum of 24 inches in length. The tail pipe includes a muffler, if present, as long as the inlet and outlet pipes of the muffler are the same diameter as the tail pipe. 4 into 2 into 1 exhaust collectors or reduced diameter venturi sections are prohibited.

j. ECU: The Pectel T2 unit is required. The current specification "SCCA Club" map is required. Failure to use the current "SCCA Club" map will result in an automatic penalty of 1 year suspension from SCCA club racing. The map is available on the SCCA web site.

k. Intake manifold and fuel injection components: The Quicksilver Race Engines (QSRE) intake air scoop, intake manifold, throttle bodies, air horns, fuel rail and injector system are required and must be used with no modifications of any kind. The only allowed intake manifold and throttle body combination is the #0138 manifold available through QSRE. Only stock Ford fuel injectors may be used and they may not be modified in any way. Fuel injectors may be replaced only with stock Ford injector part number #0280155887 XS4U-AA.

l. Intake restrictor: The QSRE #1975 intake restrictor must be used. It must not be modified in any way. The new restrictor internal diameter is 1.340 inches and this value cannot be exceeded in any measurement of the diameter. The restrictor port centerlines or shape may not be altered.

m. Engines will be mounted and aligned fore and aft in the chassis

n. The addition of material by any means to any component is prohibited

o. Non-standard rocker covers are permitted providing they in no way improve the performance of the engine.

p. Oil coolers are unrestricted.

q. A liquid cooling system is mandatory, but radiator and water pump are unrestricted.

r. Fuel pump is unrestricted.

s. Gaskets and seals are unrestricted except for

1. cylinder head gasket, Ford part number XS7Z6051CA

2. a continuous o-ring of cross-section of 0.100 inches must be fitted to each intake runner groove between the intake manifold and the head which to ensures that no air by-passes the o-ring seal

t. Pump, fan, and generator drive pulleys are unrestricted.

u. The use of non-standard replacement fasteners (nuts, bolts, screws, studs, and washers) which are not connected with or which do not support the intake manifold or any moving parts of the engine are permitted.

v. Any spark plugs may be used.

B.5. Suspension

All parts shall be of steel or ferrous material, with the exception of hubs, hub adapters, hub carriers, bell cranks, pivot blocks, bearings and bushes, spring caps, abutment nuts, anti-roll bar links, shock absorber caps, and nuts. Titanium is prohibited.

Springs: Steel only.

Shock Absorbers: Steel or aluminum alloy body.

B.6. Brakes Unrestricted (with the below restrictions)

Unrestricted except,

a. Maximum of 2 pistons allowed per caliper. Calipers must be ferrous or aluminum alloy.

b. Brake rotors are restricted to ferrous material.

B.7. Steering Unrestricted

B.8. Wheels and Tires

Thirteen (13) inch diameter wheels with a maximum front rim width of six (6) inch and rear of eight (8) inch are the only wheel sizes permitted. Material is unrestricted providing it is metal.

B.9. Transmission

a. The gearbox shall contain not more than four (4) forward gears and include an operable reverse gear, capable of being engaged by the driver while normally seated. The ratios are unrestricted.

1. The use of automatic and/or sequentially shifted gearbox is prohibited.

2. Electronic assisted gear change mechanisms and electronically controlled differentials are prohibited.

3. Gearboxes with shafts that are transverse to the longitudinal axis of the chassis are not allowed. The sole exception are the gearbox final drive (crownwheel) shaft axis and final drive shafts (half shafts). All change gears must be located in the case aft of the final drive.

b. Rear wheel drive only is permitted.

c. Final drive ratio is unrestricted.

d. The differential cannot be modified in any way to limit its normal function. Torque biasing, limited slip, and locked differentials are prohibited.

B.10. Fuel Capacity: Maximum capacity 41 liters (10.83 gallons)

B.11. Weight
Pinto Engine - 1200 lbs.
Pinto w/ aluminum cyl. head - 1200 lbs.

Zetec Engine - 1200 lbs.

B.12. Converted Formula F: cars shall reapply for homologation as Formula C cars and meet the 1986 construction rules for Formula F.

FC Dimensions - Table 4	
Dimension (refer to drawing)	**Measurement (cm)**
A. Maximum rear overhang from rear wheel axis	**80**
B. Maximum front overhang from front wheel axis	**100**
C. Maximum height measured from the ground	**90**
D. Exhaust height measured from the ground	**20-60**
E. Maximum height of any aerodynamic device	**Rim height**
F. Minimum safety rollover bar height inline with driver's spine	**92**
G. Minimum allowed helmet clearance	**5**
H. Maximum width	**185**
I. Maximum rear aerofoil width (includes endplates)	**95**
K. Maximum nose width	**135**
L. Minimum cockpit opening	**45**
M. Minimum cockpit parallel opening length	**30**
N. Minimum cockpit overall opening length	**60**
R. Maximum body width behind front wheels	**95**
S. Maximum exhaust length from rear wheel axis	**80**
7. Minimum wheelbase	**200**
5. Minimum track	120

F-2000 SPECIFICATION

1. Safety roll-over bar.
2. Substantial support structure.
3. Crushable structure.
4. Substantial structure.
5. Front track.
6. Rear track.
7. Wheelbase

Maximum height is measured with the driver aboard. Maximum height excludes safety rollover bar on which there is no maximum height.

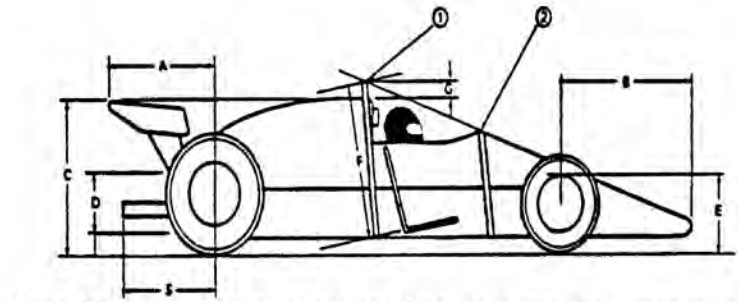

Note: Dimensions shown at the rear refer to the rear while those shown at the front refer to the front.

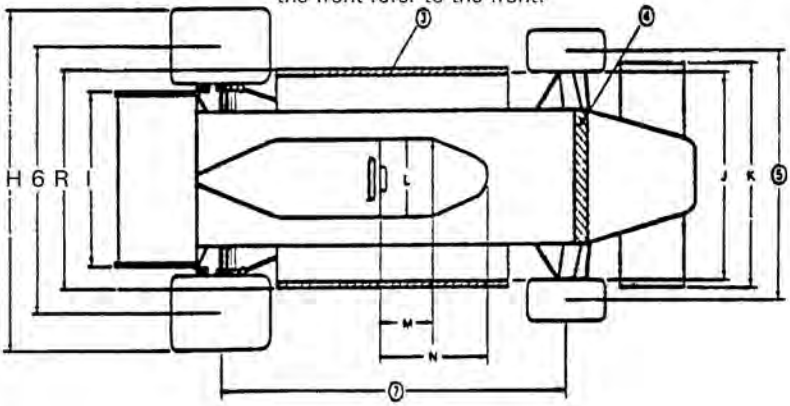

C. FORMULA VEE PREPARATION RULES

C.1. Background

A. History and philosophy of the class

Formula Vee was recognized by SCCA in 1963. The class is highly restricted, originally requiring the use of genuine VW parts "from the standard Volkswagen 1200 Sedan Series type 1, US model sedan as imported by VW" in the engine, drivetrain and suspension. Over the years, the rules have changed slowly to maintain parts availability and allow a gradual evolution of the class. However, the focus remains the same: to provide a cost effective, highly competitive class that, through consistent and tightly controlled component and preparation rules, emphasizes driver ability rather than technological development of the car. Today, as throughout its long history, FV is one of the most highly subscribed classes in SCCA. The goal of these rules is to maintain both the competitiveness and cost effectiveness of the class.

B. Definition

A formula for single seat, open wheel racing cars based on standard Volkswagen 1200 series Type 1, U.S. model sedan (imported by VW) components, and restrictive in specifications so as to emphasize driver ability and preparation rather than design and technology of the car.

Formula Vee is a **Restricted Class.** Therefore, any allowable modifications, changes, or additions are as stated herein. There are no exceptions. **IF IN DOUBT, DON'T**. Homologation is required for all cars regis-

tered after January 1, 1983.

No component of the engine, power train, front suspension, brakes shall be altered, modified, or substituted unless specifically authorized. Mass-produced, direct replacement components may be substituted for the following as long as they are of the same material and dimensionally identical to the original VW components they replace:

- VW transmission components
- Rear axle components
- Front suspension
- Brake components

These replacement parts must be generally available to all competitors and must offer no competitive advantage over the original VW parts. Replacement engine components are allowed as described in section C.5.

Any external surface of the suspension, brakes, and transmission/ rear axle may be painted, plated, or anodized.

Engine components shall be assembled in standard configuration. Exceeding the wear limits specified in the VW manual or other official VW guides is allowed provided that tolerances, dimensions, and specifications stated in the GCR are met.

C.2. Weight and Dimensions

Minimum weight as qualified or raced, with driver: 1025 lbs.
Wheel base, minimum: 81.5″
Wheel base, maximum: 83.5″
Track, front: Standard VW – maximum 52.5″ (no spacers allowed)
Track, rear: 49.125″ minimum, 50.750 maximum (no spacers allowed)
Overall length, minimum: 123″ (includes exhaust)
Overall length, maximum: 127″ (includes exhaust)
Body height at firewall (bottom of frame to top of bodywork), minimum: 25″

C.3. Suspension

A. The front suspension and steering shall be standard VW Sedan as defined herein, or an exact replica of the same material and dimensionally identical. The following modifications are allowed:

1. Removal or modification of spring packs including the use of ride height adjusters incorporated into the front beam provided they are not adjustable from the cockpit. At least one spring pack shall be retained as the primary spring media for the front suspension.
2. The use of any anti sway bar(s), mounting hardware, and trailing arm locating spacers.
3. The use of any direct acting, tube type shock absorber(s) mounted in a longitudinal, vertical plane and acting through the standard mounting points. Spring shocks and linkage activated shocks are prohibited.
4. Relocation of the steering gearbox to any position utilizing an appropriate mounting structure and replacements of the tie rods. Steering damper mount and/or the steering box locating bumps may be removed.
5. Any desired pitman arm may be used.

6. Steering column may be altered or replaced and any steering wheel may be used.

7. Standard steering arms may be altered or replaced and speedometer cable hole may be plugged. No other modification of the wheel spindle is permitted. Non-VW replacement spindles shall maintain the same bearing dimensions and locations and shall maintain the geometric relationship between the spindle and the king pin bore and boss.

   Wheel tethers are recommended. If wheel tethers are used, a hole may be drilled in the spindle for the purpose of attachment.

8. The rubber portion of the bump stop and any portion or all of the bump stop horn may be removed up to its base at the beam upright.

9. Caster, camber, and toe in/out settings are unrestricted. Clearancing of carrier or trailing arm to eliminate binding is permitted. Offset suspension bushings and alternate locating spacers are permitted.

10. No structure, item, or component (including the battery) other than bodywork, can protrude further forward than ten (10) inches from the front of the lower axle beam tube. Any item protruding further than eight (8) inches must include a vertical safety plate. This plate must be constructed of no less than .060" 6061-T-6 aluminum or no less than 16 gauge steel. The plate shall have a minimum frontal surface area of 42 square inches, and shall have a height of not less than four (4) inches and a width of not less than six (6) inches. The plate may have no more than ½ inch curvature or deflection from the vertical plane, and shall be attached to the chassis (frame) at all four corners. The lower braces shall not exceed a 15-degree upward angle when measured from the horizontal plane of the lower frame tubes.

    If a vented lead acid battery is mounted in front of the axle beam, it shall be encased in a marine-type container.

    It is recommended that the front area of the nose be filled with foam to aid in impact absorption.

11. *Alternate spindle from cip1.com part number C26-412-020 and alternate spindle carrier C26-412-025 are allowed.*

B. The rear axle assembly shall be standard VW sedan as defined herein with axle location provided by a single locating arm on each axle.

   1. The rear axle tube may be rotated about its axis.

   2. Coil spring(s) shall provide the primary springing medium, with telescopic shock absorber(s) mounted inside the spring(s). Cables, straps, or other positive stops may be used to limit positive camber. An anti roll bar or camber control device may also be used. When said anti roll bar or camber control device is removed, the required coil springs shall continue to perform functionally.

   3. The shock absorber mounts may be modified.

C. Wheels shall be standard fifteen (15) inch X 4J as used on the 1200cc and 1300cc VW sedan as defined herein, or any steel (15)

inch X 4.5J wheel within the track dimensions of C.2. Wheels may be balanced only by the use of standard automotive balance weights (adhesive or clip on). Hub cap clips shall be removed.

D. Any tire size may be fitted, except that ungrooved radial race tires (radial slicks) are not allowed.

C.4. Brakes

A. Brake drums, backing plates, and wheel cylinders shall be standard VW Sedan as defined herein, or an exact replica of the same material and dimensionally identical. Ribbed type rear drums (VW Part # N113-501 615 D or ICP Part # 113 501 615 D) may be used in place of the 1200 series rear brake drums. Rear backing plates may be from any Type 1 model year.

B. These cars shall be equipped with a dual braking system operated by a single control. In case of a leak or failure at any point in the system, effective braking power shall be maintained on at least two wheels. Any master cylinder(s) may be used.

C. A separate hand brake (emergency brake) is not required. Removal of the hand brake and operating mechanism is permitted.

C.5. Engine

A. The engine shall be a standard VW power plant, as normally fitted to VW sedans as defined herein. Any engine part(s), listed by the manufacturer (VW) as a current, superseding, replacement part for the standard VW 1200 series, Type 1, U.S. model sedan and interchangeable with the original part(s), may be used. Turbocharging is not permitted.

B. The engine/transmission shall be mounted in the chassis with the transmission to the rear.

C. The following component parts may be replaced with that of other manufacture, provided said part is of the same material, is dimensionally identical, and meets all other tolerances and specifications stated in the GCR.

1. Engine Case – Type I or Type III style single or dual relief cases only
2. Cylinder Heads
3. Cylinders (an O ring for centering is permitted).
4. Pistons and wrist pins minimum combined weight without clips or piston rings = 330.0 grams
5. Cam followers Minimum weight = 60.0 grams
6. Connecting rods with bolts and small end bushing minimum weight = 425.0 grams
7. Oil pump exact replica of any standard VW oil pump
8. Distributor
9. Ignition points or drop-in ignition triggering module (e.g., Pertonix)
10. Distributor cap
11. Fuel pump any standard type VW fuel pump which can be fitted without modification of any other part
12. Crankshaft minimum weight sixteen (16) lbs.

13. Crankshaft gear
14. Flywheel minimum weight twelve (12) lbs.
15. Pressure plate, or alternate SACHS 211 141 025 DAM pressure plate
16. Clutch disc – 180mm nominal diameter only
17. Throw out bearing
18. Push rods
19. Push rod tubes

D. Allowed Modifications

1. Replacement of standard exhaust system with any exhaust system terminating one (1) to three (3) inches behind the rearmost part of the body.
2. Lightening of the flywheel to a minimum of twelve (12) lbs.
3. Balancing of all moving parts of the engine, provided such balancing does not remove more material than is necessary to achieve the balance except on those component parts where weights are specified.
4. The crankshaft may be ground and the case may be machined to accommodate the use of standard factory oversize/undersize crankshaft bearings, provided the crankshaft location is not changed.
5. Where minimum weights are specified, any lightening is permissible provided the original part complied with the dimensional restrictions set forth.
6. The following standard dimensions and tolerances of engine components are included as information and shall be observed:

   a. Maximum bore: 3.040 inches

   b. Stroke: 2.520 inches +/ 0.005 inch.

   c. Minimum capacity of combustion chamber in head: 43.0cc (Polishing and/or tooling is prohibited.)

   d. Minimum depth, top of cylinder barrel to top of piston: 0.039 inch.

   The above dimensions may be achieved by machining any previously machined surface, provided that the total surface is machined on the same plane as the previously machined surface. The above dimensions shall be the average of all four (4) cylinders.
7. Complete or partial removal of any cooling duct component. Removal of the fan and the fan housing. Fan belt origin is unrestricted. The use of a fan belt is optional.
8. Installation of a spark plug hole repair utilizing standard thread repair methods, such as Helicoil or welding and rethreading is permitted providing that the spark plug centerline is not changed. The original size and shape of the combustion chamber must be maintained.
9. Polishing of the intake and exhaust ports, provided such polishing does not enlarge the intake port beyond 29mm

(1.142") inside diameter and the exhaust port beyond 33mm (1.299") inside diameter. The measurements are to be taken at the juncture of the seat insert and the aluminum port material, and at the manifold face. Valve seat angles shall be machined as specified in the official VW Workshop Manual.

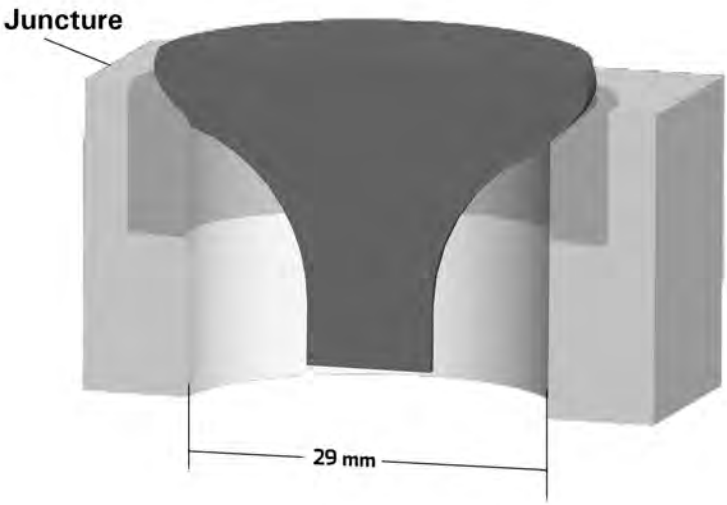

10. Replacement of intake and exhaust valve seats is allowed for the purpose of repair only. Valve Seats may not be moved from their original position. Welding is allowed to facilitate repair and installation of replacement seats. The original size and shape of the combustion chamber must be maintained. Installed seats may neither be proud or recessed of the combustion chamber surface.

Seat Dimensions				
	VW O.D. (inches)	Max O.D. (inches)	Max I.D. (inches)	Max Depth (inches)
Intake	1.385	1.445	1.142	0.375
Exhaust	1.265	1.315	1.299	0.375

Inside diameter of intake seat shall be 1.142" at the juncture of the seat to the aluminum on original seats. A depth of 0.340" from the combustion chamber on replacement seats. This is to allow blending of the seat to the port. Valve seat angles may not be larger than the outer diameter of the original VW seat (1.385" intake, 1.265" exhaust).

11. The following standard dimensions are included for information only and must be observed:

    a. Exhaust valve diameter: 1.102 or 1.18 inches

    b. Intake valve diameter: 1.18 or 1.24 inches

    c. Reprofiling of valves is not permitted.

12. Alternate exhaust valves are allowed provided the dimensions and materials are the same as standard (VW) exhaust valves.

13. In addition to the original VW manufactured valve, any mass produced, replacement intake valve may be used provided the material, profile, and finish remain essentially identical to the original VW valve, including the prominent lip at the inner edge of the valve seat. The valve must also meet the following dimensions:

stem diameter	0.305 inches minimum, measured just below the keeper grooves
head diameter	1.24 inches maximum
length	4.450 inches maximum
valve face width	0.090 inches
distance from combustion chamber face to seat surface (including any chamfer at valve head)	0.020 - 0.090 inches
stem diameter within 1.25 inches of the head of the valve	0.293 inches minimum

14. Valve springs are unrestricted providing:

    a. No more than one spring shall be used per valve.

    b. Any steel spring cap and retainers may be used.

    c. Spring shall be made of steel.

    d. Valve spring shims may be used.

15. Rocker arms may be lightened to a minimum weight of 80.0 grams. VW parts must be used, from 1200, 1300, 1500 or 1600 Type 1 engines; 1:1 or 1.1:1 ratios only.

16. Rocker arm shafts may be modified or replaced by those of other manufacture, including shafts that replace the stock clips with a solid center spacer and bolt on end caps/washers. Wave type spacer washers may be replaced by solid steel type flat washers.

17. The rocker arm shaft assembly may be shimmed out on the cylinder head mounting studs by placing appropriate shims between the cylinder head mounting boss and the blocks on the rocker arm shaft assembly.

18. Valve covers are unrestricted and may be bolted on.

19. Fitting of any standard Solex 28 PCI or 28 PICT carburetor and any jets and emulsion tube may be used. Any venturi of standard VW/Solex dimensions may be fitted without alteration to the carburetor body. The venturi shall be fitted in the standard position, but its internal diameter may be machined. The carburetor may be rotated 180 degrees about its vertical axis. Modification of the float is allowed as long as no change is made to the float chamber and/or float valve.

    The carburetor must remain untouched with the following exceptions:

    a. No material shall be added.

b. Bead blasting is permitted for cleaning only.

c. Throttle shaft Shall be a minimum of 0.185" with throttle plate installed. Machined sides shall remain flat and parallel with no chamfering or radiusing.

d. Throttle Plate Shall be a minimum of 0.053", flat and parallel with no chamfering or radiusing. Diameter shall be a minimum of 1.095 inches.

e. Carburetor Top The junction of the bowl and bore may be radiused. The bore beneath the radius shall be a maximum of 1.120 inches. Accelerator pump boss shall remain original. The orifice in the base of the accelerator pump boss shall not allow a #56 (0.046 in.) drill bit to pass through (maximum hole diameter shall be less than 0.046 in.).

f. Carburetor Body The removal of mold flashing from cast surfaces, including the emulsion tube carrier (holder), is permitted, but no additional material is to be removed. The emulsion tube carrier (holder) must not be otherwise modified. Bore diameter from throttle shaft down shall not exceed 1.110 inches.

g. Carburetor air cleaner and choke mechanism may be removed. Choke shaft holes may be plugged. Plugs may not protrude into the choke bowl.

20. US imported VW Type 1, 1200 sedan manifold must be used. The manifold heat riser tube and heat sink shall be removed. Removal of metal from the interior of the intake manifold and the interior rust-proofed is permitted provided that the following dimensions are not exceeded.

See Figures 1 and 2 at the end of this subsection for application of certain measurements specified herein.

a. Down Tube: The *O.D. of the* down tube shall be measured at two different locations within an area between 0.500" and 2.00" above the horizontal manifold tube. Each measurement shall be taken four times rotating around the circumference of the tube, and averaged.

*The a*veraged *O.D. of the* down tube shall not exceed 1.140 inches. Removing material from the outside of the manifold to achieve the legal dimension is not permitted. Removal of the manifold down tube from the horizontal tube is prohibited. The original factory furnace bronze attaching process and original factory bronze repair material MAY be visible, inside and outside the manifold.

b. Horizontal tube: The *O.D. of the* horizontal tube shall be measured at four different locations on each side of the down tube. The area to be measured on each side of the down tube is defined as being between the bend and a point that is 1.500" from the center of the down tube connection. Each measurement will be taken four (4) times, rotating around the circumference of the tube, and averaged. *The a*veraged horizontal tube dimensions shall not exceed 0.994 inches. Removing material from the outside of the manifold to achieve the legal dimension is not permitted.

The tubes making up the manifold must also meet the following requirements:

1. *The minimum bend-to-bend distance is 17.75 inches (Bend-to-bend distance is the distance between points along the horizontal tube where the .994 inch OD, as described above, is first exceeded.)*
2. *The maximum OD within the bends and extending to within 0.250 inch of the head flanges is 1.070 inches.*
3. *The maximum carburetor flange height is 9.25 inches (measured from the intake cylinder head sealing surface to the centerline of the top of the carburetor flange.*
4. *The maximum deviation from straight along the 17.75 inch bend-to bend section of the horizontal tube is 0.25 inches.*

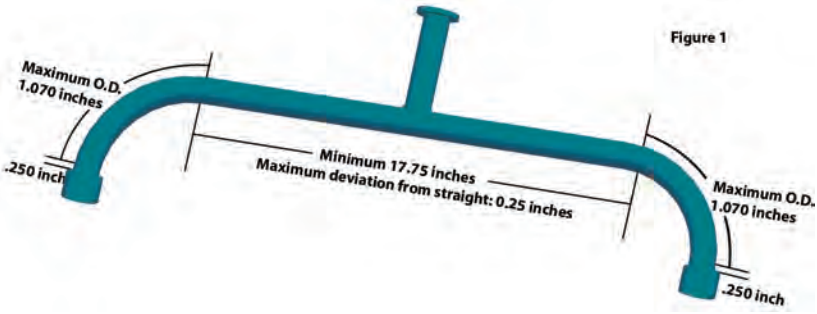

Figure 1

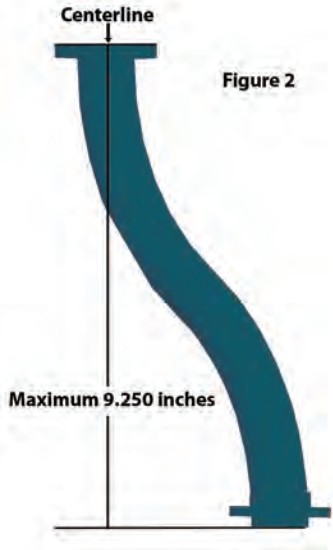

Figure 2

c. The finished, race prepared, manifold shall not weight less than 24 ounces. Intake manifolds may be repaired. Repaired manifolds shall start at 24 ounces BEFORE repair. The addition of excessive material to achieve the minimum weight is not permitted.

d All exterior surfaces shall be in original condition. Bead blasting is permitted for cleaning only. Manifolds must remain unpainted with color but may have a thin, transparent coat of rust proofing material or clear coat type material applied. Removing material from the outside of the manifold to achieve the legal dimensions is not permitted.

e. Matching of manifold flanges (to the ports) is permitted. Seal rings or "gaskets" of any type are acceptable as long as the bottom of the manifold flange is not raised above the cylinder head casting around the port opening. Removal of the manifold flanges that connect the manifold to the cylinder head is prohibited. Factory "VW" casting marks surrounded by a circle and VW casting numbers shall be visible on the bottom side of the flanges, closest to the head. No repair material of any type shall be visible or cover these markings on the bottom of the flanges. Factory furnace Bronze and manifold repair material may be visible where the horizontal tube enters the top of the flange. The exterior dimensions of these flanges must not exceed 2.990" x 1.360".

21. Voltage regulator, generator, and/or generator stand may be removed.

22. Fitting of any standard VW distributor (not restricted to 1200, series) may be used. Use of any standard 6- or 12-volt non transistorized ignition coil is allowed. Coil mounting location is unrestricted.

23. A VW "D" camshaft, Part Numbers 113 109 015D,113 109 017D, 113 109 019D, 113 109 021D,113 109 023D, 113 109 025D, 13 109 027D, or an exact replica of the same material and dimensionally identical shall be used. The maximum lift at the valve spring collar with zero valve clearance is as follows:

    a. Intake .354" + 0.000"

    b. Exhaust .3365" + 0.000"

    The camshaft profile shall match those which are specified by the official SCCA camshaft plots, plus or minus .002 inch. It is permitted to regrind the camshaft to duplicate the official SCCA profile. In so doing, the relationship between the centerlines of peak lift at the exhaust/intake lobes shall remain at 214 degrees fifteen (15) minutes, plus or minus 1degree. (Reference the Official SCCA Camshaft Checking Procedure). The camshaft timing may be changed in relationship to the crankshaft by utilizing an offset key at the crankshaft timing gear. The camshaft timing may also be changed in its relationship to the crankshaft by utilizing an adjustable cam gear that retains the existing helical gear thrust angle and that is statically adjustable only (e.g., no dynamic adjustment mechanisms that respond to engine speed changes). Camshaft timing is unrestricted within the restrictions provided as authorized above. The camshaft profile shall be checked using the official procedure published by the SCCA.

24. The crankcase may be machined to permit the use of standard VW camshaft bearing inserts, provided that camshaft location is not changed.

25. Crankshaft pulley is unrestricted and may be fitted with an oil

seal. The engine case may be machined to facilitate the installation of an oil seal.

26. The installation of baffles housed completely within the original oil sump and crankcase.
27. The use of any oil temperature indicating device.
28. The oil pump cover may be modified or replaced.
29. An oil sump extension may be fitted to the engine with a maximum internal volume not to exceed 1500cc. In operation, all movement of oil and crankcase air in and out of the extension shall be through the original oil strainer cover opening of the engine case. No additional openings in the extension are allowed above the plane of the oil strainer flange of the engine case. The oil pump pickup pipe may be extended into the sump extension. Any baffling is allowed within the extension and may extend between the engine case and the sump extension through the original oil strainer opening. Any sump may not extend below the frame rails of the chassis when viewed from the side. Accumulators (Accusump) may be fitted.
30. Replacement of oil galley plugs with threaded plugs.
31. A single standard automotive oil filter of not more than one quart total capacity, and a suitable mounting bracket and by-pass valve may be installed. Modification to the lubrication system to facilitate installation of the oil filter is permitted. All components shall be contained within the body to the rear of the firewall.
32. Any oil cooler is allowed. Oil coolers shall be mounted completely inside a plumb line extending downward from the outermost edge of the bodywork.
33. An alternate oil pressure regulator spring and/or shims may be used.
34. The standard clutch operating arm may be modified to allow its attachment in any appropriate position. Dowel pinning of the clutch pressure plate to the flywheel is permitted.
35. The use of any starter is permitted provided it can be fitted without any modification to the engine/transmission.

C.6. Transmission/Rear Axle

A. The transmission/rear axle assembly shall be standard VW sedan, as defined herein.

B. The synchromesh components shall be in place and operating on at least three gears.

C. Reverse gear shall be operable from the driver's seat.

D. Transmission shall not be installed in an inverted position.

E. The differential cannot be modified in any way to limit its normal function. Torque biasing, limited slip, and locked differentials are prohibited.

F. Allowed modifications:
Installation of any standard VW gear set which can be fitted without modification of any component of the transmission or of the gear set itself and the transposing of the ring gear to provide proper axle rotation. Permanent attachment of the synchro sleeve

to 3rd and 4th gears is permitted.

Fully synchromeshed transmission			
Gear	**Part Number**	**# of Teeth**	**Ratio**
1st	113 311 251A	10:38	3.80
2nd	113 311 261	17:35	2.06
3rd	113 311 275	22:29	1.32
	113 331 275B	23:29	1.26
	113 331 275A	23:28	1.22
4th	211 311 341	28:23	0.82
	113 311 341	27:24	0.89
Ring & Pinion	211 517 143A	8:35	4.375
	311 517 143B	8:33	4.125
Partly synchromeshed transmission			
Gear	**Part Number**	**# of Teeth**	**Ratio**
1st	113 309 251	10:36	3.60
2nd	113 309 261A	17:33	1.94
	113 309 261	17:32	1.88
3rd	113 309 275	23:28	1.22
	113 309 275A	22:27	1.23
4th	113 309 341A	28:23	0.82
Ring & Pinion	113 517 141B	7:31	4.43
There are different part numbers for various gears in addition to the ones listed here. This in general indicates changes on the parts such as:			
Gear	**Part Number**	**Ratio**	**Comment**
4th	113 311 341	0.82	with key way
	113 311 341A	0.82	with splines
Ring & Pinion	113 517 143	4.125	6 mgt bolts
	113 517 143	4.125	8 mgt bolts
However, there are no other standard ratios than the ones listed here. A gear removed from a transmission can be identified by the number of teeth.			

C.7. Ballasting

Ballasting is permitted, per GCR.

C.8. Frame

A. The frame/chassis shall be constructed of steel tubing of a maximum diameter or width of 4 inches and be of a safe and suitable design.

B. The driver's feet shall not extend beyond the rear of the front axle beam tubes.

C. There shall not be frame/chassis rigidity or strength derived by means other than the frame tubes. Stressed skin, monocoque, or semi monocoque construction is not permitted, except that:

The firewall panel and undertray(s) may be rigidly attached to the frame tubes.

D. The undertray (belly pan) from the nose to the rear roll hoop shall not be wider than the bodywork at the bottom of the frame rail or no more than 1/4 inch wider (on each side) than the frame rail when the undertray has an upward turned edge that facilitates mounting the undertray to the chassis or that facilitates mounting the body to the chassis.

E. Engine bay undertrays shall be no wider than the frame rails in this area or no more than 1/4 inch wider (on each side) than the frame rail when the undertray has an upward turned edge that facilitates mounting the undertray to the chassis or that facilitates mounting the body to the chassis.

F. Any undertray(s) between the axle center lines shall be rigidly attached to the frame provided the curvature of said tray(s), measured vertically from the lowest point to the highest point at their attachments to the frame rail members at their sides, shall not exceed 1 inch and have no downward turned edges.

G. Transmission undertrays for cars with a rear subframe shall be no wider than the subframe or no more than 1/4 inch wider (on each side) than the subframe when the undertray has an upward turned edge that facilitates mounting the undertray to the subframe or that facilitates mounting the body to the subframe or 16 inches, whichever is wider. For cars without a subframe, the tray shall be no wider than 16 inches and shall not deviate more than 1 inch from the horizontal plane. Undertray must be firmly attached and have no downward turned edges.

H. The area between the upper and lower main frame tubes, or at least 14 inches above the floor pan whichever is greater, from the front roll hoop bulkhead to the rear roll hoop bulkhead shall be protected by one of the following methods to prevent the intrusion of objects into the cockpit.

1. Panel(s), minimum of either .060 inch heat-treated aluminum (6061-T6 or equivalent) or 18 gauge steel, attached outside of the main frame tubes.

2. Reinforced body - at minimum, consisting of a double layer, 5 ounce bi-directional, laminated Kevlar material incorporated into the body which shall be securely fastened to the frame.

For either method, fasteners shall be no closer than an average of 6 inch centers (no stress bearing panels). The material used for the chassis braces in this area shall be at least equivalent to the roll hoop brace material.

C.9. Body

A. The chart (figure - Section C.12) illustrates both the intended minimum frontal area and car configuration.

B. The rear bodywork shall enclose the engine by surrounding it from a point no higher than the lower edge of the intake manifold and extending from the front of the engine to its rear on each side.

C. The rear bodywork must have the ability to enclose the original Volkswagen fan shroud mounted in its stock location (see illustration in Section C.12).

D. The top of the rear bodywork shall extend from the back of the firewall to a point at least 16 inches to the rear of the centerline of

the rear axle.

E. Any bodywork forward of the center of the torsion bar tubes shall have a maximum width of 31.75 inches (80.645cm).

F. No part of the frame or bodywork shall project beyond a plane connecting the vertical centerline of the front and rear tires.

G. The driver's seat shall be capable of being entered without the removal or manipulation of any part or panel.

H. Wings (airfoils) are prohibited.

I. Floor and safety equipment shall conform to Section 9 of the GCR.

J. A firewall to prevent passage of flame and debris between the engine area and driver's compartment shall extend the full width of the cockpit and be at least equal to the top of the carburetor in vertical height.

K. Air ducting may be attached to the carburetor and/or the engine.

L. Forward facing air ducts may be installed for the purpose of delivering cooling air directly to the engine, cylinder heads, oil cooler, and/or carburetor. If these ducts are within the profile area defined in Section C.12, then the ducted air must make a 90 degree bend within the bodywork.

M. Air duct openings may be located within the cockpit area, and/or penetrate the firewall, provided the duct is baffled or the firewall is extended to prevent flame and debris from reaching the driver. Any shape may be used to form firewall extension. Any other firewall inlet shall also prohibit passage of flame and debris.

(Recommended: All of this extension be the same width as the firewall, allowing for bodywork contour limitations, and extend in a horizontal plane back 2 inches, minimum, past the carburetor body.)

N. The bottom of any bodywork that extends below the frame members shall be on the same flat plane as the undertray (ref. C.8) and shall not deviate from that flat plane by more than 1 inch front to rear effective for any newly registered cars after January 1, 1983.

O. The rear locating arm(s), coil spring(s), and shock absorber(s) shall not be faired in and shall be visible from the side without removal or manipulation of any part or panel.

P. The front suspension upright(s) (shock absorber mounts), shock absorbers, and/or trailing arms shall not be faired in by covering or shrouding away from the air-stream except that the front shocks may be mounted behind the shock uprights.

C.10. Non-Standard Parts

The use of the following non standard replacement parts is permitted provided that no unauthorized modification of any other component results.

A. Fasteners (nuts, bolts, screws, etc.)

B. Wiring

C. Gaskets and seals

D. Brake lines and fuel line

E. Spark plugs (maximum ½ inch reach)

F. Piston rings

G. Wheel bearings

H. Connecting rod bearings and crankshaft main bearings of same type and size as standard VW

I. Brake shoes and brake lining

J. Valve guides

C.11. Battery

A. The use of any single 6- or 12- volt battery is permitted to power the starter and engine ignition system.

B. Any secondary batteries connected only to gauges, and communications or data acquisition equipment are allowed.

C.12. Front View

The following illustrates a fan shroud in its stock location.

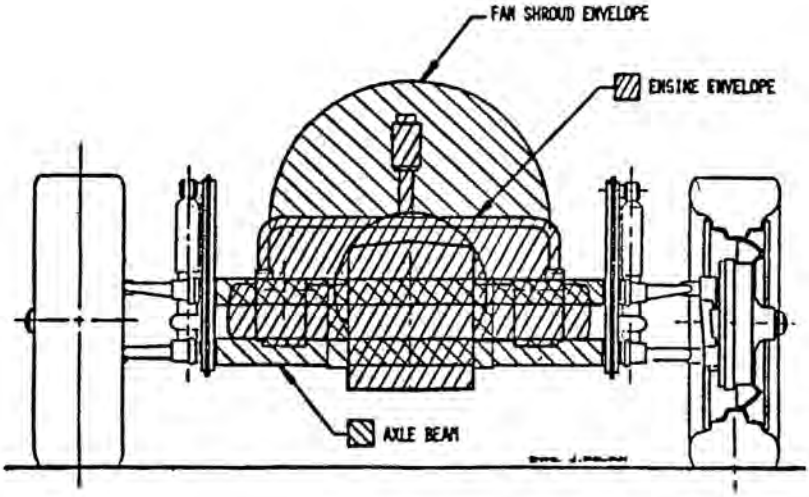

D. FORMULA F PREPARATION RULES

D. FORMULA F PREPARATION RULES

NOTE: Contained herein are the 1986 Formula F chassis construction requirements (see *D.7 and D.8*).

Definition

a. A formula for single-seat, open-wheel racing cars using standard Ford 1600 “crossflow” pushrod engines, or a Honda Fit 1500 (L15A7) overhead cam engine, with firewall, floor, and safety equipment conforming to the GCR.

b. Formula F is a Restricted class. Therefore, any allowable modifications, changes, or additions are as stated herein. There are no exceptions. IF IN DOUBT, DON’T. Homologation is required for all cars registered after January 1, 1983.

c. Three engines are allowed in Formula Ford:

1. The Ford 1600 GT "Kent" pushrod "crossflow" as installed in the Ford Cortina in 1971 and later. The Kent engine specifications are contained in D.1.
2. The Ford 1600 GT "Cortina" engine as installed in the Ford Cortina through 1970. The Cortina engine specifications are contained in D.2.
3. The Honda Fit (L15A7) 1500cc overhead cam engine as installed in a Honda Fit (all models starting 2009). The Honda Fit engine specifications are contained in D.3.

D.1. Kent Engine

a. General

1. Components shall not be interchanged between the Kent and Cortina versions of the engine unless specifically authorized.
2. The engine shall not be altered, modified, or changed in any respect unless specifically authorized herein. *When a system is specified to be "unrestricted" (e.g. paragraphs p and q), the restrictions of this paragraph do not apply.*
3. The gasket face of the cylinder head may be resurfaced provided the maximum compression ratio is not exceeded.
4. Valve guides are unrestricted provided the position of the valve is not changed. Standard Ford replacement valves, with oversize stems, may be used as normal repair/maintenance procedures. The specifications, in D.1.f are mandatory. It is permitted to re-cut or replace valve seats. Valve seat angles are unrestricted.
5. Exhaust emission control, air pumps, and associated lines and nozzles shall be completely removed. When these air nozzles are removed from a cylinder head, the holes shall be completely plugged.
6. Balancing of all moving parts of the engine is permitted. The pistons, rods, crankshaft, and flywheel may be lightened to their stated minimum weights. It is permitted to polish parts of the engine providing the contour of the part is not altered and can be recognized as the original part. Pistons may be balanced to the minimum weight by removing weight from the pin boss, the underside of the piston crown, or the bottom edge of the skirt. "Gas porting", re-profiling, or any other modification to the piston, other than expressly permitted herein, is prohibited. Knife-edging the crankshaft throws is not permitted.
7. Compression Ratio

Maximum compression ratio: 9.3 to 1

The following specifications are used in determining compression ratio:

A. Maximum bore size: 3.200"

B. Minimum cylinder volume at Top Dead Center: 42.0cc

C. Maximum valve protrusion from head surface: .040"

D. Only approved head gaskets may be used (see D.1.c.3)

b. Block

1. Bore may be enlarged for clearance between cylinder and piston.

2. Cylinder sleeves may be fitted. The top surface of the block may be milled or surface ground to obtain the maximum compression ratio specified above. Any steel center main bearing cap may be used. The oil pump mounting face on the block may be machined for the purpose of fitting an oil pump.

3. The 1600 Fiesta block is permitted as a replacement part.

4. The Ford Racing block, part number M-6010-16K, is permitted as a replacement part.

c. Cylinder Head

1. Ports may be reshaped by the removal of metal as long as the port diameter at the manifold face of the head does not exceed the following dimensions:

   Inlet: 1.50″ Exhaust: 1.20″

2. The use of the Pierce aluminum cylinder head is permitted.

3. The following head gaskets are allowed:
   A. Ford Part # 931M6051AA

   B. Payen Part # AH-750

   C. Felpro Part # 8360PT-1

d. Inlet Manifold

1. The ports may be reshaped by the removal of metal as long as the following dimensions are maintained:

   Maximum dimension at head face: 1.340″

2. Carburetor Flange

Maximum dimensions at carburetor flange: see Figure 1.

3. The carburetor face of the inlet manifold may be machined to the horizontal to compensate for fore/aft tilt of the carburetor.

4. Epoxy exposed in the manifold used to make repairs is acceptable, providing the total area is less than 0.75 square inches.

5. The water passages in the inlet manifold may be plugged. Holes in the inlet manifold resulting from the removal of emission/vacuum lines shall be plugged.

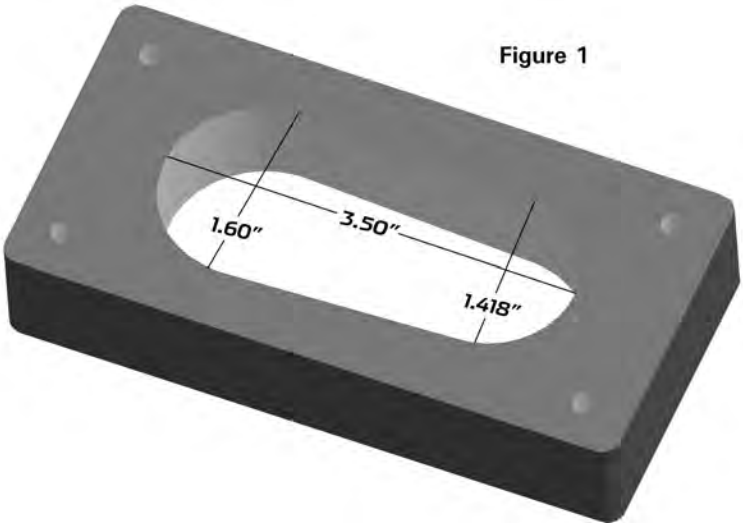

Figure 1

e. Pistons

1. Standard or 0.005 inch oversize pistons shall be used.
2. Standard size AE pistons P/N 18649, casting P/N 18634, standard size CP piston, part # 81-2 FF1600, or CP oversize piston, part # 81-2- FF1600+5 may be used.
3. Alternate piston identified as follows is allowed: P/N AE-M717D, casting number 711 M 6110. AE Hepolite P/N 20552, Casting # 20548A. Note: Mahle pistons are not allowed.
4. Dimensions and Weights

Maximum diameter:		
Standard:	3.187"	
0.005" o/s:	3.192"	
Depth of bowl:	0.470" (minimum)	
Maximum diameter of bowl:	2.44"	AE Hepolite,
	2.50"	CP Piston
Centerline of wrist pin to crown:	1.737 +/- .002"	
Overall height:	3.30"	AE Hepolite
	2.80"	CP Piston
Minimum weight	515 grams (w/ clips, pins and rings)	
Weight of pin:	115 +/- 2 grams	
Ring Groove Widths:	Top Groove:	0.064"
	2nd Groove :	0.0795"
	Oil Groove:	0.159"

5. Piston rings are unrestricted provided that:
   A. One oil control and two compression rings are used.
   B. No modification is made to the piston for the installation of rings.
   C. Pocketing of the piston valve reliefs is allowed up to a maximum of .050" to obtain the maximum combustion chamber volume.

f. Valves

1. Dimensions

	Iron head	Alloy head

Distance apart at centers 1.540" +/- .020" 1.570" +/- .020"
Max. diameter:
Inlet: 1.560"
Exhaust: 1.340"
Overall length:
Inlet: 4.367" +/- .020"
Exhaust: 4.355" +/- .020"

2. Reshaping of the valves is specifically prohibited.
3. Alternate valve AE p/n V34524 (intake), V34525 (exhaust) are permitted.

g. Camshaft

1. Regrinding camshaft lobes is permitted, providing they are ground to meet FORD and SCCA profile.
2. Camshaft Lobe Centers: 109° +/- 2°

Lift at top of pushrod:
Inlet: 0.231" +/- .002" Maximum

Exhaust: 0.232" +/-.002" Maximum

Lift at spring cap: (Valve Lift)
Inlet: 0.356" Maximum

(Zero tappet setting)

Exhaust: 0.358" Maximum

3. Recontouring of the valve stem contact pad of the rocker arm is permitted, provided the maximum lift at the spring cap is not exceeded
4. Offset camshaft/sprocket dowels are permitted.
5. Camshaft profile and lobe centers shall be checked using the official procedure published by SCCA.
6. A camshaft that is a replica of the original camshaft and of the same material may be used.

h. Valve Springs

Valve springs and valve spring shims are unrestricted, except that:

1. Springs and shims shall be made of steel.
2. No more than one spring shall be used per valve.
3. Conically wound springs are not allowed.
4. The standard spring cap and retainers shall be used.

i. Pushrods

Minimum stem diameter: 0.25"

Overall length: 7.64" Minimum

Minimum weight: 50 grams

j. Connecting Rods

Any ferrous connecting rod may be used provided it meets a minimum weight of 630 grams and has a center to center length of 4.925 +/- 0.020 inches. (Note: Weights include cap, bolts, and small end bush, but not big end bearing shells).

k. Crankshaft

An alternate cast steel crankshaft meeting original Ford Kent and SCCA

dimensions and weight is permitted.

Weight:	24 lbs. 8 oz. Minimum
Max Stroke (at piston):	3.056" +/- .004"
Crankshaft pulley:	unrestricted

The crankshaft from the Cortina engine may be used.

The crankshaft from the Fiesta engine may be used.

The crankshaft may be shot peened.

l. Flywheel

1. Weight with ring gear: 15.5 lbs minimum.
2. The flywheel may be machined to reduce weight to the above minimum weight. Flywheel locating dowels are permitted.
3. Weight may be added to the flywheel, providing it is added ONLY to the existing clutch bolt holes, i.e., single cap screws or set screws. No continuous material shall be used.
4. An alternate flywheel, part # JAE1600 is also allowed at the above weight of 15.5 lbs.

m. Carburetor

Weber 32/36 DGV or Holley 5200

Venturi diameter:	Primary:	26mm
	Secondary:	27mm

It is permitted to:

1. Fit any jets (including accelerator pump discharge nozzle) as long as no modifications to the carburetor body are required.
2. Modify or substitute the external throttle linkage.
3. Fit internal and/or external surge pipes.
4. Remove the air cleaner
5. Fit velocity stacks
6. Remove the choke butterflies and linkage.
7. Use an alternate carburetor gasket provided it is the same thickness as the original gasket and doesn't exceed the manifold opening dimensions
8. Modify the carburetor housing for the installation of throttle shaft bearings provided the modification serves no other purpose.

n. Fuel Pump

Unrestricted

o. Exhaust Manifold

Unrestricted

p. Lubrication System

Lubrication system is unrestricted; any oil pump and oil sump permitted; dry sump is permitted. Localized machining of the cylinder block is permitted to allow fitting of the oil pump.Dry sump system is permitted.

q. Cooling System

Cooling system is unrestricted. Any radiator, fan, water pump and drive belt permitted.Pump/fan/generator drive belt: Unrestricted

r. Electrical Equipment

Distributor: Distributors are unrestricted provided the original drive, location, and housing are retained. The distributor is defined as the component that triggers the LT current and distributes the HT current. The ignition timing may only be varied by vacuum and/or mechanical means. It is prohibited to use any other method or component to trigger, distribute, or time the ignition. The vacuum advance mechanism may be removed, and the distributor advance plate may be secured by soldering or welding or by suitable fasteners. The advance curve and advance springs are unrestricted. Generators/ Alternators: not required. All other electrical components are unrestricted.

s. Miscellaneous

1. The timing chain/sprocket cover may be altered or replaced.
2. The use of the following non-standard replacement parts is permitted provided their use does not result in any unauthorized modification of any other component:
   A. Fasteners - nuts, bolts, screws, studs, etc. Intake manifold fasteners may be of either a socket head or hex head configuration, and must be 5/16” diameter.
   B. Gaskets, except head gasket.
   C. Washers.
   D. Seals.
   E. Connecting rod, crankshaft, and camshaft bearings of the same size and type as original. Normal oversize/undersize bearings are permitted. This does not allow reducing the bearing surface area by reducing the width of standard bearings.
   F. Spark plugs.
   G. Rocker pedestals that are of the same material and dimensionally identical (i.e., shaft location, offset, etc.) to the original components may be used.
3. Mechanical tachometer drive is permitted.
4. The crankcase breather may be altered or removed.
5. The standard rocker cover may be altered to provide for crankcase ventilation, and the filler cap may be altered or replaced. Valve or rocker covers may be substituted, provided that the replacement cover affords no additional function than that of the original stock cover. (relocated text from 8 below)
6. The crankshaft and main bearing caps may be treated with salt-bath nitriding cover under SAE specification AMS 2755A (tuftriding, etc.)
7. Any oil or lubricants may be used.
8. Water pump, fan, and generator/alternator pulley(s) are unrestricted.
9. Exhaust Outlets

Exhaust outlets on cars registered after January 1, 1986 shall not extend more than 60 cm (23.60”) behind the centerline of the rear axle and shall be positioned between 10 cm (3.9”) and 60 cm (23.6) from the ground, measured to the bottom of the exhaust pipe.

Exhaust Outlets: Cars registered prior to January 1, 1986.

A. It is recommended that all exhaust outlets be no longer than 60cm (23.60") behind the centerline of the rear axle and positioned between 30cm (11.8") and 60cm (23.6") from the ground.

B. For cars unable to comply with the above rule (A.), they shall have a support bracket that attaches within six (6) inches of the outlet end, and the support bracket shall extend no more than thirty (30) degrees from vertical to the rear. Beginning January 1, 1986, it is mandatory for all Formula F cars.

D.2 Cortina Engine

All of D.1 applies to the Cortina engine except as specified in this section. Components shall not be interchanged between the Kent and Cortina versions of the engine unless specifically authorized.

a. Compression Ratio

Maximum compression ratio: 10.0 to 1. The following specifications are used in determining compression ratio:

1.64cc - top ring to top of piston

5.60cc - head gasket.

Minimum unswept volume per cylinder:

44.4cc (original engine with standard pistons)

45.1cc (original engine with .030" o/s pistons)

b. Block

The 1600 Pinto block, P/N DIFZ-6010-C, may be used as a replacement for the Cortina block; Standard Pinto tappets, P/N DORY 6500A and DIFZ 6500A may also be used when this block is used as a Cortina replacement.

c. Cylinder head

Ports may be reshaped by the removal of metal as long as the port diameter at the manifold face of the head does not exceed the following dimensions:

Inlet: 1.50" Exhaust: 1.16"

Combustion chamber:

Minimum depth 0.115"

Maximum length: 3.15"

Minimum volume per cylinder: 7.8cc

Reshaping is prohibited.

Ford Pinto cylinder head P/N DORY 6049B is permitted.

d. Inlet Manifold

The ports may be reshaped by the removal of metal as long as the following dimensions are maintained:

Maximum Size at head face:

Cyl. 1 & 4: 1.48" x 1.28"

Cyl. 2 & 3: .25"

Maximum size at carburetor flange: 3.060" x 1.389"

Maximum width: 3.80"

Primary choke end radius: .709"

Secondary choke end radius: .787"

e. Pistons

Standard, 0.015 inch oversize or 0.030 inch oversize pistons may be used.

Piston Maximum diameter:	
Standard:	3.189″
0.015″ o/s:	3.204″
0.030″ o/s:	3.219″
Depth of bowl:	0.500″ +/-.005″
Minimum volume of bowl:	31.5cc
Maximum diameter of bowl:	2.28″
Centerline of wrist pin to crown:	1.737″ +/- .002″
Overall height:	3.30″
Minimum weight	
w/rings & pin:	485 grams
Weight of pin:	115 +/- 2 grams

f. Valves

Distance apart at centers:	1.540″ +/- .020″
Max. diameter:	
Inlet:	1.502″
Exhaust:	1.252″
Overall length:	
Inlet:	4.280″ +/- .006″
Exhaust:	4.260″ +/- .006″

g. Crankshaft

Weight: 23 lbs. 8 oz. minimum

The crankshaft from the Kent engine may be used.

h. Carburetor

Weber 32 DFM or DFD or Holley 5200

Venturi Diameter:	Primary:	26mm
	Secondary:	27mm

D.3. Honda Fit 1500 (L15A7) Engine

a. General

1. No modifications to this engine are allowed except where specifically authorized within these rules. This includes, but is not limited to, all fuel injection and engine management components, electrical, cooling and lubrication systems. All systems are subject to test procedures and must conform to OEM specifications as stated in the Honda Fit factory service manual, Honda PN 61TK600 and all superseding years, or as specified in these rules. The factory service manual or its equivalent is required to be in the possession of each entrant. The manual may be the form of printed material, microfiche, CDs, DVDs and/or Internet access to manufacturer sponsored web-based databases.

2. Permitted engine maintenance includes the replacement, but not modification, of external engine and engine systems parts.

3. All rubber fluid lines may be replaced with braided metal-covered (Aeroquip type) lines. Hose clamps maybe installed on the rubber oil lines.

4. No balancing, lightening, polishing or other modification of moving parts of the engine is permitted.

5. Only stock Honda manufactured gaskets and seals as specified in the Honda Fit factory service manual are permitted (Including, but not limited to, head gasket, intake runner gaskets and O-rings, restrictor plate gasket, and intake and exhaust gaskets).

6. For all Honda part numbers in these specifications, superceding part numbers are considered equivalent.

b. Block

1. The only permitted cylinder block is Honda PN: 11000-RP3-810
2. Honing of cylinders is permitted to a maximum diameter of 73.065 mm (2.8766 inches). Fitting of cylinder sleeves is prohibited. Re-boring to over size is prohibited.
3. Block must use stock main bearing caps, girdle and hardware as supplied.
4. Minimum deck height from crank centerline: 220.00 mm (8.661 inches).

c. Crankshaft

1. The stock Honda Fit crankshaft, Honda PN: 13310-RB1-000, must be used with no modifications allowed.
2. Minimum weight: 27.7 lbs. No pilot bearing, pulsar or hardware.
3. Maximum stroke at piston: 89.55mm (3.526 inches)
4. Main and rod bearings must not be modified in any way. OEM bearings must be used from within the standard range as allowed in the Honda Fit factory service manual.
5. The crank pulsar must not be altered in any way.
6. The crank pulley/balancer must not be altered or modified in any way.
   a. Minimum weight: 3.90 lbs.
   b. Honda PN: 13810-RB0-003.

d. Connecting Rods

1. Stock Honda Fit connecting rod must be used PN: 13320-RB1-000.
2. Minimum connecting rod weight with cap and bolts: 280.0 grams (9.88 ounces).
3. Maximum connecting rod length center to center: 149.05mm (5.868 inches).

e. Pistons

1. Honda Fit OEM standard size pistons, PN: 13010-RB1-000, must be used.
2. The use of over size pistons is not permitted.
3. Piston dimensions and weights:
   a. Maximum standard piston diameter, measured at a point 16mm from the bottom of the skirt: 72.990mm (2.8736 inches).
   b. Centerline of wrist pin to crown maximum: 26.21mm (1.032 inches).
   c. Maximum overall height from skirt to crown edge: 47.80mm (1.882 inches).

d. Minimum weight: 198.0 grams (6.984 ounces).

e. Minimum weight of piston pin: 66 grams (2.25 ounces).

f. Combined minimum weight of piston, piston pin and connecting rod: 543.5 grams (18.85 ounces).

4. Piston rings must be as used in the Fit engine. Two compression rings and one 3 piece oil control ring must be used.

a. The standard ring pack PN 13011-RB1-004 (Riken) or 13011-RB1-006 (Nippon).

b. No modification of the piston is permitted for the installation of rings.

c. Ring groove widths.

Top ring groove: 1.04mm (0.0409 inches) +/- 0.01mm.

Middle groove: 1.02mm (0.04016 inches) +/- 0.01mm.

Oil ring groove: 2.00mm (0.07874) +/- 0.01mm.

d. Ring gaps must be from 0.006 inch to 0.024 inch.

f. Cylinder Head

1. The only permitted heads are Honda PN: 12200-RB0-G00 (US spec) and 12200-RB0-000 (Japan Spec).

2. The gasket face of the cylinder head may be resurfaced provided the maximum compression ratio is not exceeded or to a service limit of 0.2mm (0.008 inches) based on a height of 120mm (4.72 inches).

3. The cylinder head must not be ported, polished or machined. The original casting must not be modified in any way or polished.

4. Head gasket to be stock Honda Fit PN: 12251-RB0-004. Minimum compressed thickness of 0.76 mm +/- 0.05mm.

5. Cylinder head breather restrictor must be used as supplied by HPD, unmodified. PN: 15262-F21S-A200.

g. Camshaft

1. The only permitted camshaft is PN: 14110-RB1-J00; must not be modified.

2. The CMP pulse (cam trigger) plate must be as supplied, Honda PN 14221-RB0-003.

3. The camshaft and crankshaft sprockets must be as supplied, Honda PNs: 14211-RB0-J00 and 13621-RB0-003, respectively. Cam timing must not be altered; the timing chain must be installed as specified in the Honda Fit factory service manual. The timing chain/sprocket cover and crankshaft pulley may not be altered. With the engine at TDC (No. 1 cylinder), the “UP” mark on the camshaft sprocket must be at the top and the TDC grooves on the camshaft sprocket must line up with the top edge of the cylinder head.

a. Timing chain Honda PN: 14401-RB1-003.

b. Case assy, chain (sprocket cover) PN: 11410-RB1-000

c. Pulley comp, crankshaft, PN: 13810-RB0-003

d. Cam timing at lobe centers: (at 1mm after opening to 1mm before closing).

i. Exhaust: 119 degrees, +/-1.0 degree.

ii. Intake VTEC on: 111 degrees, +/-1.0 degree.

4. Camshaft profile and lobe centers shall be checked using the official procedure published by the SCCA.

5. Cam lobe heights: Intake, Primary: 35.240mm, secondary: 36.200mm, exhaust: 35.490mm.

6. Valve lift measured at the retainer:

a. Exhaust: 9.200*mm*

b. Intake VTEC off: 8.680*mm*

c. Intake VTEC on: 9.900*mm*

7. Valve rockers must not be modified in any way.

a. Honda PN: 14620-RB1-010 Arm Assy, rocker.

8. The VTEC system must be stock. The VTEC activation valve must be stock. The HPD ECU will activate the VTEC at 5200 RPM. Honda PN: 15810RB0-G01.

h. Valves

OEM valves must be as used in the Fit.

1. Dimensions

a. Inlet PN: 14711-RB0-000 Exhaust PN: 14721-RB0-000

b. Maximum diameter: Inlet: 28.15mm Exhaust: 23.15mm

c. Maximum overall length: Inlet: 119.15mm Exhaust: 117.85mm

d. Minimum stem diameter: Inlet: 5.45mm Exhaust: 5.42mm

2. Valve location or angle must not be moved.

3. Reshaping of the valves is strictly prohibited.

4. Valve guides may be replaced provided the position of the valve is not changed and the replacement guides are Honda OEM parts.

Inlet PN: 12204-PJ7-305 (over size)

Exhaust PN: 12205-PJ7-305 (over size).

5. It is permitted to replace or re-cut valve seats provided the valve seat angles are stock Honda three angle cut per the Honda Fit factory service manual.

6. Valve stem installed height must be per The Honda Fit factory service manual:

Intake maximum: 46.8mm.

Exhaust maximum: 46.9mm.

7. Valve stem seals must be Honda OEM parts.

Honda PN: Intake: 12210-PZ1-004 seal A.

Honda PN: Exhaust: 12211-PZ1-003 or 12211-PZ1-004 seal B.

i. Valve Springs

1. Valve springs are Honda OEM as specified in the Honda Fit factory service manual.

   a. Intake PN: 14761-RB1-003, free length: 48.55mm.

   b. Exhaust PN: 14762-RB1-007, free length: 54.52mm.

2. Valve spring shims are not permitted.

j. Compression Ratio

The maximum compression ratio is 10.55 to 1 utilizing Honda Fit factory service manual limits. Carbon may be removed.

k. Intake Manifold and Fuel System

1. The lower manifold must be stock Honda Fit parts. It is not permitted to add or remove material. No coating is permitted on the exterior or interior of the manifold. (SCCA Club Racing will have a standard port model for comparison.)

Honda PN: 17100-RB1-000

2. The upper manifold, air box and throttle body assembly must be used as delivered from HPD. External throttle return springs are unrestricted.

3. All gaskets and sensors utilized on the inlet manifold from head to throttle body must be Honda Fit OEM or HPD supplied.

   a) Gasket In. manifold: 17105-RB0-004, Honda Fit OEM.

   b) Gasket, EGR chamber cover: 17146-RB0-004, Honda Fit OEM.

   c) Gasket In. port: 17115-RB0-007, Honda Fit OEM.

   d) Gasket, restrictor: 17399-F21S-A200, (2 required) HPD.

4. The fuel rail must be as supplied by HPD. Injectors must be stock Honda Fit OEM parts (PN 16450-RNA-A01). *The fuel pressure regulator may be the unit supplied by HPD or any alternate as long as the fuel pressure regulator serves no additional purpose.* Injectors must be stock Honda Fit OEM parts (PN 16450-RNA-A01).

5. *The Honda Fit engine is required to have an HPD supplied air inlet restrictor with internal diameter of 29.0mm and thickness of 3.175mm (0.125 inches) correctly installed within the intake system*. The restrictor may not be modified in any way; the specified value can not be exceeded in any measurement of the diameter. The restrictor centerline or shape must not be altered. SCCA Club Racing will have go-no go gauges to verify that all competitors are in compliance.

l. Fuel Pump

1. The fuel pump is unrestricted.

m. Exhaust Manifold

1. The exhaust manifold must be as supplied by HPD*, HPD part #18150-F21S-A200 or #181850-F21S-B200.*

2. The exhaust manifold exit may be shortened within HPD speci-

fied limits to direct the tail pipe as necessary. The exhaust pipe must maintain a 2 inch outside diameter from the manifold exit to its outlet and must meet 9.1.1.D.1.s.9.

3. *The Lambda sensor may be placed anywhere in the exhaust system after the required exhaust manifold.*

4. Exhaust coatings and wraps and heat shields may be used to control engine bay temperatures and protect other components.

n. Lubrication System

1. The oil pan must be as supplied by HPD. No modifications are permitted.

2. Oil feed pump must be stock Honda Fit. No modifications are permitted. Oil pressure may be adjusted for wear.

   a. The oil pressure sensor location must be as supplied by HPD.

   b. It is recommended that oil pressure be maintained at the factory service manual specification.

3. The scavenge pump must be as supplied from HPD. No modifications are permitted.

   a. Rotor length: 25.400mm (1.000 inches)

b. Rotor outside diameter: 44.400mm (1.748 inches)

4. Scavenge drive pulleys must be as supplied by HPD. Drive belt manufacture is unrestricted provided the belt type and dimensions are as specified by HPD.

5. Hose routing and filter system are unrestricted.

o. Cooling System

1. Water pump and water pump pulley must be stock Honda Fit parts. No modifications are permitted.

Honda PN: 19200-RB0-003 Pump, water.

Honda PN: 19224-RB0-000 Pulley, water pump.

2. The water inlet and outlet at engine must be as supplied by HPD. The thermostat is unrestricted provided the housing is not modified. The thermostat bypass may be plugged.

3. Drive belt manufacture is unrestricted provided it is designed for use with Honda Fit crank pulley.

4. Radiator is unrestricted.

p. Electrical Equipment

1. The ECU and engine electrical harness must be as supplied by HPD. No modifications are permitted.

2. The ECU will be a sealed unit supplied by HPD. The ECU maps and inputs must not be modified The ECU is capable of being swapped in the case of a protest.

3. Ignition coils must be stock Honda Fit, PN: 30520-RB0-003. No modifications are permitted.

4. All sensors related to engine operating parameters and/or

supplied by HPD must be used. These sensors, their locations and mounts, and their wiring harness leads may not be altered or "piggy backed". Any sensors required for analog type gauges must be in addition to the HPD supplied sensors.

5. The alternator must be stock Honda Fit PN: 31100-RB0-004 *or HPD part #3100-F21S-A200*. The alternator drive pulley must be stock. Alternator connections must be through the HPD engine electrical harness only. The alternator must not be disabled and must be accessible to SCCA officials.

q. Flywheel

1. The stock Honda Fit flywheel must be used. No modifications are permitted except for normal resurfacing for clutch wear.

   a. Stock Honda flywheel PN: 22100-RB0-005.

   b. Minimum weight with ring gear: 14.4 lbs.

2. The stock Honda Fit clutch must be used. No modifications are permitted.

   a. Honda PN: 22300-RB0-005.

   b. Minimum weight without friction disk: 7.0 lbs.

3. Stock Honda friction disk must be used. No modifications are permitted.

   a. Honda PN: 22200-RB0-005.

   b. Weight of new friction disk: 2.1 lbs.

r. Miscellaneous

1. All emission control devices must be removed and blocked off by the blanking plate provided by HPD, except the VTEC activation valve. The VTEC activation valve must be retained; it must be functioning.

2. Air filter is unrestricted.

3. The use of unleaded premium "pump" gas: 91 – 93 RON is recommended.

4. The use of the following non-standard replacement parts is permitted provided their use does not result in any unauthorized modification of any other component.

   a. Fasteners – nuts, bolts, screws, washers, studs, etc. Head bolts, rod bolts, flywheel bolts, and crank pulley bolt must be used as provided by Honda and HPD.

   b. Gaskets and seals, except those specified in the above rules.

   c. Spark plugs.

   d. Mechanical tachometer and analog gauges.

   e. Oil and lubricants are unrestricted. HPD strongly recommends the use of oil and lubricants as described in the Honda Fit factory service manual.

   f. The oil filler cap may be removed and plugged.

D.4. Transmission

Any transmission may be used with not more than four (4) forward gears

and an operational reverse gear.

a. The use of automatic and/or sequentially shifted gearbox is prohibited.

b. Electronic assisted gear change mechanisms and electronically controlled differentials are prohibited.

c. Gearboxes with shafts that are transverse to the longitudinal axis of the chassis are not allowed. The sole exception are the gearbox final drive (crownwheel) shaft axis and final drive shafts (half shafts). All change gears must be located in the case aft of the final drive.

D.5. Final Drive

Any final drive unit may be used except:

a. Drive shall be to rear wheels only.

b. The differential cannot be modified in any way to limit its normal function. Torque biasing, limited slip, and locked differentials are prohibited.

D.6. Clutch

The use of any single plate clutch is permitted provided no modification is made to the flywheel other than changing the points of attachment of the clutch to the flywheel, and provided that it shall have an operable clutch system. Carbon Fiber clutches are not permitted.

D.7. Chassis/Frame

Formula Ford 1986 construction requirements as of January 1, 1986 as revised January 1, 2010. All new Formula Ford cars are to be built to these specifications covered in D.6 and D.7. (Also required for Formula Continental.)

a. The chassis shall be of steel space-frame construction. Forward-facing braces that protecting the driver's legs and feet shall extend from the front roll hoop to the front bulkhead (The front bulkhead is defined as the transverse section of the frame immediately ahead of the pedals and drivers feet.) The soles of the driver's feet shall not extend beyond the front edge of the wheel rims (in normal position; (i.e., pedals not depressed) and shall remain behind the front bulkhead. The lower main frame rails shall be a minimum of 25 centimeters (9.84 inches) apart (inside dimension) from the front bulkhead to the rear roll hoop. Monocoque-type structures are prohibited.

   A stress bearing floor pan constructed from a minimum of .060 inch heat treated aluminum sheet or 18 gauge steel sheet is required. At a minimum, it shall extend from the front bulkhead to the rear roll hoop bulkhead. Its curvature shall not exceed one inch. The floor pan may be constructed in multiple sections.

   The front bulkhead, forward roll hoop (dash hoop) bulkhead and main hoop bulkhead may also utilize stress-bearing panels. No other stress-bearing panels are allowed.

   Stress-Bearing Panel Definition: Any sheet material that is attached to the frame by welding, bonding, riveting, threaded fasteners, or any combination thereof, the centers of which are located closer than 6 inches. No materials other than aluminum or sheet steel are allowed for use as stress-bearing panels. Stabilized materials (honeycomb) are not permitted as stress-bearing panels.

b. The area between the upper and lower main frame tubes from the

front roll hoop bulkhead to the rear roll hoop bulkhead shall be protected by one of the following methods to prevent the intrusion of objects into the cockpit.

1. Panel(s), minimum of either .060 inch heat treated aluminum (6061-T6 or equivalent) or 18 gauge steel, attached to the outside of the main frame tubes. No other material types will be allowed for these panels.

2. Reinforced body - at minimum, consisting of two layers of 5 ounce, bi-directional, laminated Kevlar material incorporated into the body which shall be securely fastened to the frame. (5 layers are highly recommended.)

   For either method, fasteners shall be no closer than 6 inch centers (no stress-bearing panels). The material used for the chassis braces in this area shall be at least equivalent to the roll hoop brace material.

c A firewall(s) that seals the drivers' compartment (cockpit) and the engine compartment is required. Forward facing ducts may be installed to delivering air directly to the engine compartment. Air duct openings may be located within the cockpit provided the firewall is extended to prevent the passage of flame and debris from reaching the driver.

d. Brackets for mounting components, such as the engine, transmission, suspension pickups, instruments, clutch and brake components, and body panels, may be non-ferrous, of any shape, and attached to the frame in any manner.

e. Impact Attenuators: See GCR 9.4.5.G.

f. No engine oil or water tubes are allowed within the cockpit, except for shielded (stainless steel braid) mechanical oil pressure lines. Chassis tubes shall not be used as oil or water transport tubes.

D.8. Bodywork

For the purposes of this section, bodywork includes all panels external to the chassis/frame and licked directly by the air stream. This includes panels above or below the floor pan, and the bottoms of any side pods.

a. a. The bodywork opening giving access to the cockpit shall have the following minimum dimensions:

   Length: 60cm (23.62 inches)

   Width: 45cm (17.72 inches)

   This width extends over a length of 30cm (11.81 inches) minimum. This minimum rectangular opening may exist anywhere forward of the firewall. Forward-facing roll bar/cage bracing and padding will not be considered in these dimensions.

b. The driver's seat shall be capable of being entered without the manipulation or removal of any part or panel, with the exception of the steering wheel and/or drivers head surround. The steering wheel and the surround must be removable by the driver and/or safety workers without the use of any tools. Readily legible removal instructions for safety workers are recommended.

c. Bodywork (including undertrays, floor pan, spoiler and any attached components except for suspension components) shall not exceed a maximum width of 95cm (37.40 inches). No part of the bodywork, rear spoiler, or exhaust system shall extend more than 100cm (39.37 inches) behind the centerline of the rear axle nor

exceed in height a horizontal plane 90cm (35.43 inches) above the ground with the car as qualified or raced with the driver on board. The safety roll bar/roll cage and engine air box are not included in these restrictions. Bodywork shall not increase in width behind the centerline of the rear axle in any horizontal section.

There shall be no forward facing gaps or openings in the bodywork with the exception of those necessary for engine cooling, engine air inlet, shock, or brake cooling. All bodywork shall be firmly attached to the chassis.

For Formula Ford, a wing shall be defined as any shape that has a leading edge and a trailing edge and creates downforce. Wings and other airfoil devices ("dive planes", etc.), whose primary purpose are to create aerodynamic downforce, are prohibited. Any part of the car which that has an influence on the aerodynamic stability of the vehicle shall be firmly attached with no provisions for adjustment to vary downforce. A single rear spoiler, that may be capable of adjustment, is permitted. Cockpit adjustment is not permitted. This spoiler shall be no wider than the surface to which it is attached, and there shall be no gap between the spoiler and the body surface to which it is attached.

d. It is the intent of these rules to minimize (not eliminate) the use of "ground effects". A reference area is defined by the full width of the lowest surfaces of the car licked by the air stream between the front axle centerline and the rear of the rear tires. These surfaces may include the floor pan, undertrays, side pod bottoms and any essentially horizontal bodywork that is included in the lowest surfaces licked by the air stream. Within this reference area, the lowest surfaces licked by the air stream must be flat with a total vertical tolerance of 2.54cm.. An undertray beneath the engine, bell housing and/or gearbox is not required.

(For FF only) No part of bodywork is allowed to have any down-turned fences or intermediate strakes and no bodywork below the horizontal centerline of the differential and to the rear of the rear tires may be wider than 16 inches.

The perimeter of any reference area surface that transitions upward to any bodywork may use a maximum 1 inch radius.

Mirrors and any primarily vertical bodywork (e.g., cockpit sides) that extend laterally past the outer edges of the floor pan and/or undertrays are not subject to the reference area restrictions. Fairings for streamlining suspension pickups are not subject to the reference area restrictions; however, such fairings shall be symmetrical about their horizontal axis.

Measurement for compliance of the defined area shall be performed as follows:

1. A non-flexible straight-edge bar shall be placed against the lower surface of the reference area in a suitable section (unworn and flat enough to prevent rocking of the bar) from which the bar can be oriented to measure all parts of the reference area. The competitor shall be responsible for the availability of such a surface. The bar shall be of sufficient length to reach all portions of the reference area from that surface.

2. All measurements shall be taken vertically from the bar to the reference area surfaces. The total maximum vertical distance (additive upward and downward) from the bar to any part of the reference

area surfaces shall be 2.54 cm. Skid blocks and or rub strips are not included in this measurement.

No aerodynamic devices (e.g., skirts, body sides, skid “planks”, undertrays, skid blocks, etc.) may extend more than 1 cm (.394 inches) below the reference area.

Shaping of the lower surfaces to create “venturi” type tunnels is prohibited. An example of venturi tunnels is shown in the following figure.

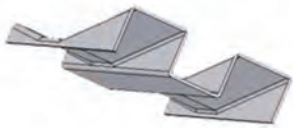

e. It is not permitted to duct air through any part of the bodywork for the purpose of aerodynamic downforce. All ducted air for heat exchangers shall pass through those heat exchangers.

f. Carbon fiber is not permitted in any external bodywork. Cockpit interior panels, internal ductwork, air intakes and mirrors are not subject to this restriction. Kevlar may be used for reinforcement of any bodywork.

g. Fuel cell vents shall be located at least 25cm (9.84 inches) to the rear of the cockpit.

D.9. Suspension

Suspension is defined as the system of springs, shock absorbers, control arms, links, etc., supporting the vehicle on its axles. Sway bars, sway bar links, steering components, etc., are not considered as suspension in this section.

All suspension components shall be of steel or ferrous material, with the exception of hubs, hub adapters, hub carriers, bell cranks, pivot blocks, bearings, bushings, spring caps, abutment nuts, shock absorber caps and nuts. Titanium and carbon fiber are prohibited.

Front and rear hub carriers shall be only steel or aluminum alloy for cars manufactured after January 1, 1983. (applies to FF only) Springs shall be steel only.

Control arms and all associated items that attach directly to the chassis members shall be boxed in or captured to prevent intrusion into the cockpit.

Shock absorbers: Design - unrestricted; casing material: steel or aluminum alloy.

All components that are not defined as chassis/frame or suspension are unrestricted, unless otherwise restricted by these rules or the GCR. Titanium is prohibited. Carbon fiber is prohibited

It is not permitted to attach spoilers, fairings or other devices that may exert downforce to the movable suspension members. If the suspension member is of streamline or airfoil cross section, it shall be symmetrical

about its horizontal axis. Brake lines may be attached to suspension members. Brake lines may be enclosed in a symmetrical fairing.

D.10. Brakes
Unrestricted, except:

a. Maximum of 2 pistons allowed per caliper. Calipers must be ferrous or aluminum alloy.

b. Brake rotors are restricted to ferrous material.

D.11. Wheels
Wheels are unrestricted except that:

a. Material is unrestricted providing it is metal.

b. Diameter shall be thirteen (13) inches.

c. Rim width shall not exceed 5.5 inches.

D.12. Weight
Minimum weight as qualified or raced, with driver:
1050 lbs. Ford Cortina Engine
1100 lbs. Ford Kent and Honda Fit Engines

D.13. Cars Registered Prior To 1/1/86
The following specifications are for cars registered prior to January 1, 1986 and for Technical Inspection only. No cars are to be built to these specifications as of January 1, 1986.

A. Chassis/Frame
The chassis is defined as the frame. It shall be a steel space frame. Monocoque-type structures are prohibited. Sheet material affixed to the frame by welding, bonding, or riveting, or by bolts or screws which are six (6) inch centers are defined as stress-bearing panels.

The undertray, for safety reasons, shall be a stress-bearing panel. Its curvature shall not exceed one (1) inch. The mountings for brake and clutch pedals and cylinders, and for the instrument panel and the bulkhead (panel) behind the driver may be stress-bearing. No other stress-bearing panels are permitted.

Brackets for mounting components, such as the engine, transmission, suspension pick-ups, instruments, clutch, and brake components, and body panels may be non-ferrous, of any shape, and fastened to the frame in any manner.

Gussets are defined as of steel, fastened to a maximum of two (2) members, and are specifically permitted.

The firewall portion of the bulkhead (panel) shall extend the full width of the cockpit and be as high as the top of the carburetor. Forward facing air ducts may be installed for the purpose of delivering air directly to the engine area. Air duct openings may be located within the cockpit provided the firewall is extended to prevent flame and debris from reaching the driver. (Any shape may be used to form firewall extension.) All firewall inlets shall prohibit passage of flame and debris.

B. Suspension and Running Gear
Suspension is defined as the system of springs, shock absorbers, A-arms, links, etc., supporting the vehicle on its axles. Sway bars, sway bar links, steering rack housings, steering links, etc., are not classified as suspension or running gear for this application.

All components shall be of steel, with the exception of hubs, hub

adapters, rear hub carriers, and bearings and bushings. Front hub carrier material shall be of steel or aluminum alloy. The materials for front and rear hub carriers on cars manufactured after January 1, 1983 will be only steel or aluminum alloy. Springs: steel only, titanium is prohibited.

Shock absorbers: Design: Unrestricted.

Casing Material: Steel or aluminum alloy.

All components which are not defined as chassis/frame or suspension or running gear are unrestricted, unless otherwise restricted by the GCR. Titanium is prohibited.

C. Body

1. Definition of Bodywork

Internally: All visible parts of the passenger compartment.

a. The bodywork opening giving access to the cockpit shall have the following minimal dimensions:

Length: 60cm (23.622 inches)

Width: 45cm (17.72 inches)

This width extends over a length of 30cm (11.811 inches) minimum. This minimal rectangular opening may exist anywhere forward of the firewall. Forward facing roll bar/cage bracing and required padding will not be considered in these dimensions.

b. The driver's seat shall be capable of being entered without the manipulation or removal of any part or panel.

c. Bodywork, including fuel tanks, shall not exceed a maximum width of 95cm (37.4 inches).

d. No part of the bodywork and aerodynamic devices shall exceed the height of a horizontal plane 90cm (35.4 inches) above the ground. The safety roll bar/roll cage and engine air box are not included in this height restriction. Measurements are to be made in any condition, driver on board.

e. No part of the bodywork shall extend more than 100cm (39 inches) behind the centerline of the rear axles.

f. Any specific part of the car which has an aerodynamic influence on the stability of the vehicle shall be firmly fixed with no provisions for adjustment to vary downforce.

g. Side-mounted radiators (behind the front wheels) may extend beyond the 95cm (37.4 inches) limitation, but not beyond a vertical plane passing through the centerlines of the front and rear tires. Any portion of a radiator that extends beyond the 95cm (37.4 inches) limitation cannot be covered with any type of shrouding. Radiators mounted in front of the front wheels are considered front mounted and cannot exceed the 95cm (37.4 inches) limitation.

2. Wings and other airfoil devices which have the principal effect of creating aerodynamic down-thrust are prohibited. Airfoil: Any device or part of a car (excepting normal and conventionally styled bodywork) which has a principal effect of creating aerodynamic downthrust. Within this definition may be included forward facing gaps or openings in the bodywork,

but shall not include spoilers in the form of raised surfaces, continuous with the body surface, and not wider than the body surface.

3. It is the intent of these rules to minimize the use of "ground effects" to achieve aerodynamic down-force on the vehicle. Thus, for the full width of the body between the front and rear axles, the lower surface (surface licked by the air-stream) shall not exceed 2.54cm (1 inch) deviation from the horizontal in any longitudinal section through that surface. (This is not to be interpreted as requiring a floor pan beneath the motor, transaxle, transmission, or final drive housing.) No aerodynamic devices (e.g., skirts, body sides, etc.) may extend more than 1cm (0.394 inches) below the lower surface of the tub or chassis floor to the rear of the front axle. Seat buckets or other protrusions shall not circumvent this rule. It is not permitted to duct air through any part of the bodywork for the purpose of providing aerodynamic downforce on the car. All ducted air for heat exchangers (water/oil) shall pass through those heat exchangers.

4. Fuel tank air vents shall be located at least 25cm (9.843 inches) to the rear of the cockpit.

E. FORMULA 500 PREPARATION RULES

E.1. Definition
A class for single-seat, open-wheel, rigid-suspension race cars using snowmobile-derived engines and drive components. Specifications are restrictive in nature in order to emphasize driver ability rather than design.

Formula 500 is a Restricted class. Therefore, any allowable modifications, changes, or additions are as stated herein. There are no exceptions. IF IN DOUBT, DON'T. Homologation is required for all cars registered after January 1, 1983.

E.2. Weight and Dimensions
Minimum weight as qualified and raced, with driver, shall be 700 pounds (800 pounds for AMW and Rotax RAVE/non-RAVE 494 engines, 825 pounds for Rotax 493 engines).

Wheelbase:	Maximum	80"
Overall Length:	Minimum	110"
	Maximum	150"
Overall Width:	Minimum	50"
	Maximum	55"

E.3. Suspension shall be restricted and of a safe, suitable design. "Restricted" is defined as follows:

A. There shall be no springs or shock absorbers acting either directly or indirectly between the frame/chassis and axle.

B. Rear driving axle shall be of solid or tubular steel. Axle shall be one piece live axle, driving both rear wheels. Trailing arms are allowed. Differentials and/or slip joints are not permitted. The object of E.3.B., is to eliminate independent rear suspension of any type, or provision for lateral movement of the axle shaft to facilitate independent-type suspension.

C. Blocks, bushings, and/or mounts of rubber or similar material shall be used to isolate engine and drive assemblies, and/or axles from

vibration, shock, or track irregularities. The number of mounts shall not exceed one (1) per wheel and shall not exceed one (1) inch in thickness in uncompressed state nor shall they be stacked. The diameter of the mounts shall not exceed two (2) times their thickness. The mounts shall carry the weight of the car. Installation will be evaluated on compliance with both the letter and the intent of this provision.

D. Front axle(s) design and/or mounting configuration shall be such that the axle(s) does not function as a torsion bar. Split-axle/independent front suspension is permitted so long as suspension control is effected solely by the mounting defined herein.

E. Anti-sway bars are not permitted.

E.4. Brakes
Brakes shall be foot-pedal operated, hydraulic disc or drum-type, acting on all four wheels. The brakes shall be a dual system, arranged in a manner to provide braking for at least two (2) wheels in the event of failure in part of the system.

E.5. Steering
Steering is unrestricted provided it is of a safe and suitable design.

E.6. Transmission and Final Drive
Transmission of power from the engine to the rear wheels shall be through an automatic torque converter-type, centrifugal variable ratio drive, using a belt and/or drive chain and centrifugal clutch. Sprocket and/or pulley diameters may be changed to alter the drive ratio. No electronically or driver-controlled variable drive is permitted.

E.7. Frame/Chassis
The frame/chassis assembly shall be constructed of steel tubing, and shall be of a safe and suitable design. The monocoque-type chassis is permitted but shall have reinforcement plates at all points of attachment for axles, engine, drive components, roll cage, and driver restraint system. There shall be a bulkhead incorporated in the chassis forward of the soles of the driver's feet with the pedals depressed. Forward-facing braces protecting the driver's legs and feet shall extend from the front roll hoop to the front bulkhead*, unless foot protection is provided in accordance with 9.4.5.G.1.B.*

The soles of the driver's feet shall not extend beyond the front edge of the wheel rims (in normal position; i.e., pedal not depressed).

E.8. Roll Cage
Cars shall have a full roll cage complying with section 9.4, made of steel, designed so that when viewed from overhead, an opening, having a minimum width of fourteen (14) inches and a minimum length of seventeen (17) inches is available for driver extraction under emergency conditions.

E.9. Bodywork
All mechanical components of the car, forward of the roll cage, shall be covered by suitable bodywork. Exceptions are the wheels, brakes, front suspension components, and the cockpit. Driver's seat shall be capable of being entered without the removal or manipulation of any part or panel. Sports car noses are recommended provided they do not extend beyond the outside edge of the front tires, do not stand taller than the top of the front tires, and their rearward most portion does not extend beyond an imaginary line drawn from the center of the front wheel, forty (40) degrees forward from vertical.

Bodywork behind the front wheels and forward of the rear wheels shall

extend to within one (1) inch of a line connecting the outer edges of the front and rear wheels. *In a horizontal plane, it shall begin within 2.5 inches of the rear-most part of the tire in the completely turned position and extend to within 4.5 inches of the front of the rear tire.* The sidepod(s) shall be continuous from the outside edge of the main bodywork, at a minimum height of nine (9) inches, maximum twelve (12) inches measured from the bottom plane of the car. The sidepod(s) shall be closed across the front except for air duct openings to heat exchanger(s), but ALL ducted air shall pass through those exchanger(s). The sidepod(s) may be open to the rear. Sidepod(s) is (are) intended to restrict wheel entanglement between cars. The purpose of these rules is to eliminate the use of "ground effects" to achieve aerodynamic downforce on the vehicle. Thus, for full width of the body between the front and rear axles, the lower surface (surface licked by the airstream) shall not exceed 2.54cm (1 inch) deviation from the horizontal in any longitudinal section through that surface. (This is not to be interpreted as requiring a floor pan beneath the motor or rear axle.) The bodywork shall not extend below the surface of the tub or chassis floor to the rear of the front axle. Seat bucket or other protrusions shall not circumvent this rule. It is not permitted to duct air through any part of the bodywork for the purpose of providing aerodynamic downforce on the car. Wings are prohibited.

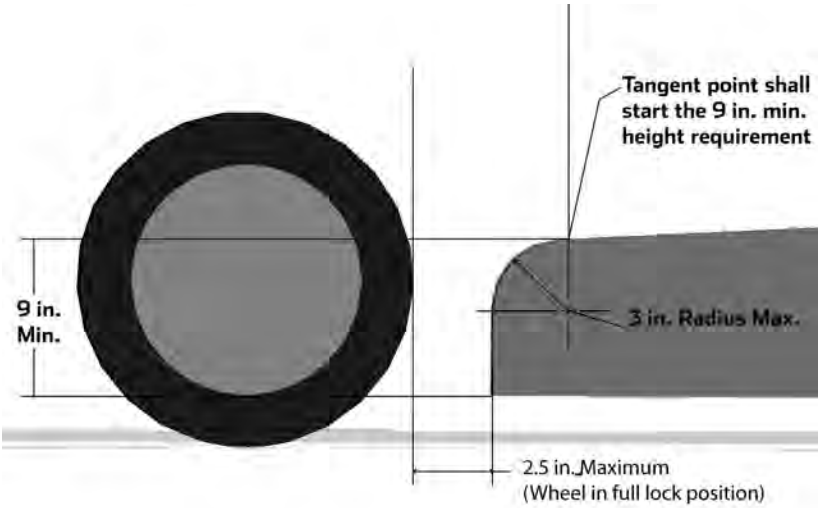

E.10. Tires
Any recognized ten (10) inch racing tire with any tread width up to a designed 7.5 inch width may be used. Any HR rated radial tire may be used as a rain tire.

E.11. Wheels
Wheels shall not exceed a ten (10) inch diameter and 8.5 inch width.

E.12. Ballast
Ballast may be added to meet the minimum weight requirement provided it is securely mounted within the bodywork and serves no other purpose. It is recommended that underweight cars be brought to the minimum limit by adding strengthening material to areas providing driver protection; i.e., roll cages, frame rails, etc., rather than simply bolting in additional weight.

E.13. Fuel Tank
The fuel container shall be located within the bodywork, ahead of the rear

wheels and behind the centerline of the front wheels.

E.14. Engines
Engines shall be two-cylinder, two-cycle, water-cooled in stock configuration as listed below: Fuji "Chaparral" Model G44bw. "Kawasaki TC440A"/C-200, B-201, C-201, C-202, F-202, and G-203. The F-202 and the G-203 are electric start engines. Cylinder head P/N 440/2A is permitted for the engines listed. Only the "A" series engine is legal; the use of any parts from other Kawasaki series engines is prohibited. Rotax Model 494 and Model 493, single expansion chamber and electric and/or pull starter, and Rotax 494 RAVE engine must use the 494 non-RAVE rotor, Ski Doo part numbers 420 924 509 or 420 924 508, 147 degree designation. RAVE valves may be blocked in the "full open" position or left as delivered. 494 RAVE and non-RAVE cylinder heads may not be interchanged between engines.

AMW engine as specified:
The AMW engine approved for F500 shall be the AMW model no. 250-2 RC2, two-cylinder, two cycle, liquid cooled, reed valve engine with a nominal bore and stroke of 72mm x 61mm and a displacement of 497cc. All components of the engine shall be in "as cast" condition or as delivered from AMW. No component of the engine may be altered, modified, or changed nor be of any other origin than the original equipment manufacturer (OEM) unless specifically authorized in these rules. Any Y-pipe exhaust manifold and single expansion chamber meeting 9.1.1.E.14.B is permitted. All factory technical bulletins shall be approved by the Club Racing Board prior to implementation and publication. AMW Technical Bulletins #10/96.01, Published October 1996, #03/97.01, Published January 1997 and Technical Bulletin #04/99.01, Published February 1999, have been approved by the Club Racing Board.

The engine must be installed in the chassis so that the exhaust ports face the front of the car. The engine may be inclinded from vertical.

Hardware items (nuts, bolts, etc.) may be replaced with similar items performing the same fastening function(s).

No component of approved engines may be altered, modified, or changed, nor be of any other than original equipment manufacture unless specifically authorized. Engine components shall be assembled in stock configuration. Stock configuration is defined as including: water outlet elbow, ignition harness, etc.

Authorized Changes:

A. Carburetors: The induction system is restricted to two (2) 38mm Mikuni VM 38 round slide carburetors (except AMW). No modifications are permitted to the carburetor bodies. The use of any jets or jet needles is permitted.

   Carburetor mounting shall be of individual runners, no balance pipes, no plenums unless fitted as standard as on the 493 engine. Supercharging, turbocharging, and direct fuel injection are prohibited.

B. Any exhaust pipe(s) may be used (unless otherwise specified). Maximum exhaust length behind the rear axle centerline is twenty-four (24) inches. It is the intent of this rule that the exhaust pipe includes the exhaust manifold.

C. Alternate piston replacement for Chaparral engine only, "Wiseco" one-ring piston.

D. Any thermostat may be used. *The thermostat may be modified in any manner, replaced with a "restrictor" of any similar shape/*

design to regulate coolant flow, or removed entirely.

E. Alternate AMW/Wiseco piston (#2687) is permitted.

F. Engine specifications will not be changed during the current year.

G. Rotax 494 and 493 engines: Any Rotax 494 or 493 respectively, model thermostat housing or water outlet elbow may be used. The water bypass may be blocked. *Either upper or lower cylinder head water outlet may be blocked in any safe manner to facilitate use of a single water outlet.*

H. Rotax 494 engine only: Rotax OEM 0.010" overbore piston P/N 887-554 is permitted. Engines may be overbored as specified by Rotax so that this piston may be fitted.

I. Alternate WISECO piston (#2084PS) is permitted (for Kawasaki engine only).

J. Rotax 493 engine only: Rotax OEM 0.010" overbore piston P/N 420888443 is permitted. Engines may be overbored as specified by Rotax so that this piston may be fitted.

E.15. Chain/Belt Guards
Protective guards made from 1/8" aluminum or 3/32" steel are required where belt or chain breakage could result in injury to the driver or damage to items necessary for the safe operation of the vehicle. This includes, but is not limited to, fuel lines, fuel tanks, brake lines, radiator, and water hoses.

E.16. Radiator
Capacity, size, shape, location, and number are unrestricted. Overhead radiators shall be at least six (6) inches rearward of driver's head.

E.17. Safety Items
In addition to previously mentioned items, the following equipment is required. Vehicle will be fitted with:

A. Mirrors affording the driver clear fields of vision behind him/her, and on both sides of the car.

B. Cars shall not be started with rear wheels on the ground unless a driver is on board.

F. FORMULA MAZDA

F.1. Eligibility
Only cars homologated as Formula Mazda are eligible for competition in this class.

F.2. Formula Mazda Description
Formula Mazda cars are one design, single seat, open wheel automobiles conforming to safety standards as per regulations. Engine - Mazda 13B rotary as approved by SCCA Club Racing.

F.3. The Intent of the Rules
All components of the car shall be purchased from Moses Smith Racing, sourced from the supplying manufacturer to Moses Smith Racing or fabricated as exact replicas of components supplied by Moses Smith Racing. It is the explicit intention of these rules and regulations to prohibit innovation and alteration of the cars except as provided by these regulations or supplements.

F.4. Additional Safety Requirements, Decals, and Patches

A firewall, full width between the roll bar upright, securely attached at the level of the shoulder harness attachment bolts, up to and bolted to the upper headrest cross member, is mandatory. The manufacturer's new rollover bar design (February 2000) for the Star Race Car FM chassis is accepted. All Moses Smith Racing Formula Mazda chassis shall be converted to the manufacturer's new rollover bar design by 1/1/2001.

F.5. Electrical

A. Alternators (P/N 3A2T4167 Mitsubishi 65 Amp or P/NA5T41474 Mitsubishi 60 Amp) shall be in working order and not modified in any manner. Belt tension shall be within the factory tolerance.

B. Battery shall be securely mounted in front of the master cylinders, in the center nose support frame. Battery type is unrestricted.

C. The wiring harness may be modified so long as it does not change the actual electrical function of the car and does not override the alternator or rev limiter.

D. The use of the MSD (P/N 6446 only) 6T spark box, MSD Soft Touch limiter, or MSD (P/N 6420 - 6AL) is mandatory. Location of the spark box and limiter is unrestricted, provided that access to visually inspect and remove the limiter chip is not impeded. A 6600 rpm limiter chip is standard. A maximum rpm of 6850rpm is allowed. Competitors may use adjustable rev chip (Moses Smith Racing part # 080-135). Competitors are advised that MSD chip function may vary with temperature, and should take measures to ensure compliance at all times.

E. Instrumentation is unrestricted

F. Bosch Blue coil is mandatory.

G. MSD Spark Plug wires (Part #31919) are mandatory.

F.6. Radiators and Plumbing

A. Fluidyne oil cooler #DB30130 or any brand oil cooler measuring (+/- 1/2") 2" thick x 12" wide x 12 1/4" high shall be fitted behind the engine in front of the wing, above the gearbox.

B. Water radiators shall be fitted in both sidepods. They shall be installed in series with each other. The swirl pot shall be connected to the inboard inlet of the left radiator. The outboard outlet of the left radiator shall be connected to the right side radiator's outboard inlet. Approved radiators: Volkswagen P/N 171121253D. Moses Smith Racing P/N 100-101 and Moses Smith Racing P/N 100-142.

C. All cars shall be equipped with oil and coolant catch tanks per GCR Section 9.3.

D. Flat sheet metal blanking material may be fitted surrounding the radiators and oil cooler to prevent cooling air from leaking around the radiators or oil cooler rather than passing through. Synthetic foam sealing material may also be used for this purpose, provided that any combination of materials do not extend more than 3" beyond the plane of the radiator or cooler, and may not extend outside the standard bodywork.

F.7. Engine

A. The spec engine shall be the six (6) port Mazda 13B Rotary or the four (4) port Mazda Renesis Rotary as approved by SCCA Inc. Said engine is to be sealed by an approved engine builder and shall remain so with no modifications to the engine or any of its accessories or components.

All engines shall be returned to an SCCA approved engine builder to be dynoed and resealed with the new generation engine seals.

B. No engine may be rebuilt except by a rebuilder approved by SCCA Club Racing.

Approved Engine Builders:
Daryl Drummond Enterprises, Inc.
3590 North River Rd
Gold Hill OR 97525
mailing address:
PO Box 678
Rogue River OR 97537
(541) 582-1786

C. The use of any impregnating material in the engine is expressly prohibited.

D. Engine drain plugs shall be safety wired.

E. Alternate Header (13B) Moses Smith Racing P/N 050-133 or Moses Smith Racing system provided with Renesis conversion kit is permitted.

F. Minimum flywheel weight - 8.5 lbs.

G. Alternate one-piece intake manifold (part # 050-142) is permitted. If the Renesis motor is used, the standard, unmodified factory fuel injection must be used.

H. Spark plugs are unrestricted

I. Ceramic apex seals, Mazda part number 0000-01-9115, may be used.

J: Replacement Water Pump, Mazda part number 8AF2-15-010B may be used.

K. Two functional belts must be used to drive the alternator and water pump.

F.8. Fuel System

A. All carburetor jets are unrestricted, but no other modifications shall be made to the carburetor (50mm DCO/sp or 48mm DCO modified to 50mm, as supplied). Chokes 44mm. F.15 emulsion tubes are required.

B. Only the standard Weber 48 DCOE intake horns are permitted.

C. Fuel pump, fuel filter(s), fuel pressure regulator are unrestricted. Fuel lines shall be –6 metal braided hose, otherwise unrestricted.

D. Only the factory fuel injection can be used with the Renesis motor. A restrictor plate supplied by the engine builder must be utilized in the throttle body. The plate shall measure .250″ thick and contain one 44.0mm hole centered in the plate with no radiusing. No air shall bypass the restrictor.

F.9. Drivetrain

A. Limited slip differentials, torque biasing devices, locking differentials or full locked differentials are prohibited. Aluminum or modification of the unit provided is prohibited.

B. 10:31, ring and pinion.

C. Polishing of driveline components is permissible through either conventional mechanical polishing techniques or by way of chemi-

cally assisted systems such as the REM Isotropic finishing system. Coatings are not permitted.

F.10. Weight and Dimensions

A. Maximum wheelbase - 94-5/8”

B. Maximum track front - 59-1/4”

C. Maximum track rear - 57-3/4”

D. Minimum weight with driver = 1350 lbs w/ 6 port 13B, 1400 lbs w/ 4 port Renesis.

E. Ballasting is permitted. Ballast shall be mounted forward of the fuel cell but aft of the instrument panel bulkhead and/or aft of the nose pole but ahead of the master cylinder bulkhead. Ballast shall be mounted securely.

F.11. Suspension

A. Ride height is unrestricted within the standard adjustment range. Droop limiters are not allowed.

B. Anti-roll bar stiffness may be adjusted within the range allowed by sliding clamps on the anti-roll bar or front bars may be drilled for adjustment. Anti-roll bars may be disconnected.

C. 5/8 or 11/16 inch front and 11/16 or 3/4 inch rear anti-roll bars (solid) are required.

D. Shock absorber settings are unrestricted, but no alteration to the internal mechanism or fluid medium is allowed. Extended top shock spring retainers may be used to ensure clearance from suspension members, or to prevent spring disengagement at full droop.

E. Shock absorber - front: Koni P/N 82x-2236, rear: 82x-2269. Alternates: front: 8216-2420, rear: 8216-2421, or front: 3012-1604FMF, rear: 3012-1616FMR. Spring rates are unchanged. Shock absorber sealastic – 55mm P/N 000-141 (Koni P/N 70-34-53-000-0) or 40mm P/N 000-146 (Koni P/N 70-34-54-000-0). Shock absorber packer(s) P/N 000-147 (Koni P/N 15-34-62-000-0). The number of packers is unrestricted. Sealastics and packers shall be unmodified except that the standard slit may be widened or made into a wedge shape to facilitate installation and removal. When Koni shock absorbers 3012-1604FMF and/or 3012-1616FMR are used, the Koni shock bumpers P/N 000-152, *Koni part # 72-34-48-000-0.*

F. Springs: Front: six (6) or seven (7) inch unrestricted length, 450, or 750 lbs./inch rate. Rear: eight (8) inch unrestricted length, 400 or 500 lbs/inch rate.

G. Camber, caster, toe-in/out, bump steer, are unrestricted within the adjustment range provided on the car.

H. Manufacturer and construction of spherical bearings and rod ends are unrestricted; however, geometry and length cannot be changed.

F.12. Wings

A. Wing “angle of attack” (front and rear) is unrestricted within the adjustment range. Rear wing adjuster link (P/N 110-126) length is 2.25” overall. It is permitted to shorten existing rear wing adjuster links to 2.25” overall length to match revised part (P/N 110-126).

B. Wings may be of aluminum construction, but shall conform to stock dimensions as described by the manufacturer.

C. Gurney flaps for wings (3/4" Front max. & 3/8" Rear max.) are permitted, provided they are mounted on the upper surface of the wing). Note: Gurney flaps are measured from the upper wing surface, normal to the surface and must not serve to increase the plane of the wing. (Quick change attachment is prohibited, bolted or riveted only)

F.13. Brakes

A. Tilton brakes bias adjustment may be fitted.

B. Brake master cylinder - Use of (any) 3/4" or 5/8" master cylinders (with individual reservoir) is approved.

C. Any mass produced brake pad that fits the standard caliper without modification is permitted.

D. Modification of brake rotor is prohibited. Option: Two piece brake rotor, Moses Smith Racing P/N 040-126 and Moses Smith Racing P/N 040-127 may be used. Minimum brake rotor thickness = 0.300".

E. Optional brake caliper Moses Smith Racing P/N 040-130 may be substituted.

F. The use of any ferrous brake caliper piston is permitted.

F.14. Tires and Wheels

A. A competitor shall start the race on the same set of tires (meaning the original four) used in the qualifying session. It is the responsibility of the competitor to ensure their tires are marked appropriately for the qualifying and race sessions. It is recommended that regions offer these services at a central location and at a standardized time, preferably at Tech.

B. Any change of tires during or between a qualifying session shall automatically result in all previous times being disallowed.

C. If a tire is damaged during a qualifying session, the competitor may replace that tire with a used tire upon approval by the Chief Steward. Should a tire be replaced for any reason, the competitor shall forfeit his grid position and start at the back of the grid.

D. Rain tires may be used at any time.

E. Any competitors deemed to have taken steps to circumvent these rules, or deemed to have used a foreign substance on the tire in order to gain an advantage shall be immediately disqualified from that event.

F. All cars shall run BBS (8" x 13") front and (10" x 13") rear wheels as specified by the manufacturer. Alternate BBS wheel center (part # 000-143 & 000-154) is permitted.

G. Use of tire warmers or cooling methods other than natural air convection or conduction is prohibited.

F.15. Gearbox

A. All cars shall be equipped with some combination of the following gears:

Mark5, or Mark8 Series Gears 15:36 – 15:30 – 15:25 – 17:34 – 19:32 – 18:25 – 21:29 – 17:23 – 22:30 – 24:27 – 19:23 – 23:28 – 25:26 – 26:25 – or 26:26 Webster; 24:24 Hewland

B. Additional approved gear ratios may be added by the manufacturer with SCCA Club Racing authorization.

C. Reverse shall be installed and in workable condition.

D. Gearbox rear covers may be modified to permit installation of longer shift finger shafts.

E. Transmission drain plugs shall be safety wired.

F. Shift rail stops may be added to transmission shift mechanism.

F.16. Clutch

A. Only a 1700 Pound KEP, 2300 Pound KEP, or Stage 2 KEP (Moses Smith Racing part # 060-104) All Steel Pressure Plate is permitted and must be used unmodified. [The original pressure plate is no longer available. The replacement is the KEP Stage 2, all steel plate.]

B. Clutch disc may be a “Dalkin” or “Marchal” or L&T disc remanufactured on VW core with organic friction material. Moses Smith Racing P/N 060-103

C. Minimum flywheel weight - 8.5 pounds. Moses Smith Racing P/N 060-102

F.17. Mufflers

A. All cars shall be equipped with a SuperTrapp muffler P/N 5AS-2556 with none or any number of plates installed as needed to meet sound If no plates are present the end plate is not required.

B. The main muffler, Power Pulse Muffler (Racing Beat) P/N 16400, shall be in good working order with no removal of steel wool or other alternations allowed.

C. The following options are allowed:

1. Use of the approved “Lo-back” muffler as a substitute for the Racing Beat muffler. Alternate Muffler Moses Smith Racing P/N 050-134 and header Moses Smith Racing P/N 050-133, are permitted. All other specifications to remain the same.

2. Use of deflectors such as the SuperTrapp mud ring are allowed.

F.18. Headers

Headers must be unmodified except that high-temperature coatings are permitted.

F.19. Hardware and Fluids

A. Fasteners, links, and rod ends may be either metric or standard threads, but shall be at least grade five (5). Hardware and fasteners may not be modified to change adjustment parameters.

B. Brake fluid, fasteners, clamps, and radiator hoses are unrestricted.

C. Lubricants and fluids, except fuel, are unrestricted.

F.20. Cockpit

A. Cockpit controls and mechanisms may be adjusted within their stock operating range.

B. It is permissible to modify the driver’s seat. The driver’s seat attachment bracket on the chassis may be modified to facilitate adjustment, but shall ensure positive retention of seat attachment bolts. Seat shell may be removed and the assembly replaced by a poured foam seat.

C. The head rest may be extended forward to improve head support, provided the spacer(s) and attachments serve no other purpose.

D. A quick disconnect steering wheel may be used. Make and diam-

eter are unrestricted.

E. A fabricated sheet aluminum cockpit liner is permitted.

F.21. Bodywork

A. Engine covers are required. Air inlet ducts may be trimmed but must not change profile of outside bodywork.

B. Mirrors are California by Vitaloni - Model #01CBT. Alternate rear view mirror (P/N 110-136) is permitted.

C. No modification to body external contour or dimensions is permitted. No openings may be added or reshaped. A blister may be added to the engine cover if needed for clearance between carburetor linkage and bodywork. Optional: rearmost, rear face of sidepods may be open, closed, or vented by drilling.

D. The aluminum undertray may be replaced with a stress-bearing undertray, minimum of eighteen (18) gauge steel. This undertray shall be attached to the frame by welding, bonding, or by rivets or threaded fasteners.

E. Star Formula Mazda bodywork or exact equivalent is required.

F. A windscreen may be added to the bodywork, it shall: 1) Not exceed 144 square inches of surface, nor stand more than six inches normal (measured 90 degrees to the surface) to the bodywork. 2) Be constructed from flat stock with no compound curves. 3) Be symmetrical left to right. 4) Not extend more than 12 inches to each side from the car's longitudinal centerline, measured along the cockpit opening. 5) Not constitute a potential hazard to driver, emergency crews or other competitors.

G. Engine compartment belly pan, Moses Smith Racing P/N 030-132, or any sheet metal pan covering the underside of the engine compartment, provided it is flat when viewed from the bottom (may have a bend up at the leading edge for stiffness), and does not extend past the trailing edge of the frame, nor more than 1.5" past the outer edges of the frame on each side.

G. FORMULA S CLASS (FS) (REGIONAL CLASS ONLY):

G.1. Definition

A formula for purpose built, highly modified single-seat, open-wheel, open cockpit racing cars, which meet the general regulations of Section 9. of the GCR for Formula Category cars, yet are different in concept and specifications from the current SCCA Formula classes. Homologation is required on ALL Formula S cars.

All Formula S cars registered after January 1, 2003 shall meet all preparation rules of Section G. Formula S cars registered prior to January 1, 2003 may be updated to Section G. specifications but they shall meet all requirements of Section G. without exception.

Exceptions to the FS specifications must be requested with the homologation application and will be listed on the homologation certificate.

G.2. Chassis/Frame

Chassis/frame construction is unrestricted within the following limitations:

A. Chassis of non-metallic composite construction shall be proven to meet FIA specifications for non-metallic composite chassis prior to being submitted to the SCCA for homologation. There are no

exceptions. Contact SCCA National Office for a list of the relevant FIA specifications/SCCA requirements.

B. Chassis of metallic tube and/or metallic monocoque construction shall be manufactured to be consistent with the safety requirements outlined within these rules and the GCR.

G.3. Engines

Any engine(s) may be used within the following limitations:

A. Piston or rotary internal combustion, gasoline-fueled engines only. No turbines. Turbo and/or supercharging is permitted.

G.4. Fuel System

Fuel system is unrestricted within the following limitations:

A. Fuel Cell Vents: Fuel tank air vents shall be located at least 25cm (9.843 inches) to the rear of the cockpit.

G.5. Electrical System

Electrical system is unrestricted within the following limitations:

A. Self Starter: Cars shall be equipped with on-board self-starter and on-board power supply controlled by the driver while in a normal driving position.

G.6. Transmission / Final Drive

Transmission / final drive system is unrestricted within the following limitations:

A. Power shall not be applied to more than two (2) wheels.

G.7. Bodywork and Airfoils

Bodywork and airfoils are unrestricted within the following limitations:

A. Cockpit Opening:

The driver's seat shall be capable of being entered without the removal or manipulation of any part or panel (except for a removable steering wheel and removable cockpit padding).

The cockpit opening of metallic chassis shall have the following minimal dimensions:

Length: 60cm (23.622 inches)

Width: 45cm (17.717 inches)

This width extends over a length of 30cm (11.811 inches) minimum. This minimal rectangular opening may exist anywhere forward of the bracing, and required padding will not be considered in these dimensions.

The cockpit opening of non-metallic chassis shall be designed to meet the FIA F3 homologation requirements (article 275).

B. Aerodynamic Devices:

1. The mounting apparatus of any part having an aerodynamic influence (i.e. bodywork, floor, sidepods, wings, spoilers, etc.), shall be rigidly secured to the entirely sprung part of the car (chassis/monocoque), shall have no degree of freedom in relation to the entirely sprung part of the car (chassis/monocoque), and shall remain immobile in relation to the chassis/monocoque at all times. This allows for actively adjusted aerodynamic elements (i.e. wings, diffusers, etc.).

2. No Aerodynamic skirts per GCR Section 9.3 Aereodynamic Skirts. Within the preceding restrictions, only wearable material (fiberglass, Kevlar, carbon fiber, high density polyethylene, polypropylene, Teflon, Lexan, or wood) may be attached to

the side panels as a rubbing strip. Ceramics, brittle plastics (i.e. Plexiglas), and other materials which shatter or break-up causing hazardous track conditions are prohibited.

3. Ground effects are permitted, but may not be attained by "sealing" or bridging the gap between the bodywork and the road surface. Any means adopted to circumvent this intention shall automatically be regarded as a breach of these regulations.

4. Leading Edges of Airfoils: The leading edge of any airfoil fixed to the front of the car shall not be sharp. Minimum radius: 0.5cm (0.2 inches).

G.8. Suspension

Suspension is unrestricted within the following limitations:

A. All cars shall be equipped with a full suspension system (i.e. springs, torsion bars, etc.) front and rear. Rigid mounted suspensions are prohibited. Monoshock/monospring systems are permitted.

G.9. Steering

Unrestricted provided that it is of a safe/secure design and acts upon at least two wheels at one end of the vehicle.

G.10. Wheels and Tires

Wheels and tires are unrestricted within the following limitations:

A. Tires shall have a minimum speed rating of 120 mph or better. Tires shall be the same size and design (i.e. radial, bias-ply, etc.) for the right and left sides of the front axle(s), and same size and design (i.e. radial, bias-ply, etc.) for the right and left sides of the rear axle(s).

B. Wheels: Minimum diameter 10", minimum width 5.5". Wheels shall be identical for the right and left sides of the front axle(s), and identical for the right and left sides of the rear axle(s). Wheel material shall be metal. Cars shall be equipped with a minimum of four (4) wheels. Wire wheels are prohibited.

G.11. Brakes

Brakes are unrestricted within the following limitations:

A. Cars shall have a braking system that acts upon all wheels of the vehicle. Chain/belt driven cars may have a single brake caliper that acts upon the differential, thereby applying braking force to the two (2) drive wheels.

B. Cars shall be equipped with a dual braking system operated by a single control. In case of failure or leak at any point in the system, effective braking power shall be maintained on at least two wheels.

G.12. Weight (without driver)

The minimum weight of the vehicle as raced, without driver, shall be 750 lbs.

G.13. Additional Safety Equipment

A. Mirrors per GCR Section 9.3 Mirrors. Additionally, there shall be at least two (2) mirrors, each with a minimum 55cm² (8.53 in²) of reflective surface.

B. Towing Eyes per GCR Section 9.3 Towing Eyes. Additionally, if the rollbar is faired-in, the fairing shall have rollbar access hole(s) to allow for quick retrieval.

C. Side Intrusion Protection

For metallic chassis, the area between the upper and lower main frame

tubes from the front roll hoop bulkhead to the rear roll hoop bulkhead shall be protected by one of the following methods to prevent the intrusion of objects into the cockpit.

1. Panel(s), minimum of either .060" heat-treated aluminum (6061-T6 or equivalent) or eighteen (18) gauge steel, attached outside of the main frame tubes.
2. Reinforced body - at minimum, consisting of a double layer, five (5) oz., bi-directional, laminated Kevlar material incorporated into the body which shall be securely fastened to the frame.
3. For either method, the material used for the chassis braces in this area shall be at least equivalent to the roll hoop brace material.
4. Non-metallic chassis are covered under the FIA chassis homologation.

D. Driver's Feet Position
For metallic chassis, the frame shall incorporate forward-facing braces to protect the driver's legs and feet. The braces shall extend from the front roll hoop to the front bulkhead. (The front bulkhead is defined as the furthest forward transverse section of the main frame.) The soles of the driver's feet shall not extend beyond the front edge of the wheel rims (in normal position; i.e., pedals not depressed) and shall remain behind the front bulkhead. The lower main frame rails shall be a minimum of twenty-five (25) centimeters (9.84") apart (inside dimension) from the front bulkhead to the rear roll hoop.

1. Non-metallic chassis are covered under the FIA chassis homologation.

H. FORMULA 1000 PREPARATION RULES

Formula 1000 is a restricted class. Therefore, all allowable modifications, changes, or additions are as stated herein. There are no exceptions. IF IN DOUBT, DON'T. Homologation is required for all cars.

H.1. Definition
A formula for purpose built, open-wheel, open cockpit racing cars. F1000 allows converted Formula Continental, Formula 2000, Formula F, and purpose-built motorcycle-powered tube frame chassis. Re-homologation as an F1000 is required for all converted cars.

H.2. Chassis
A. The chassis shall be of tubular steel construction only. Composite construction (defined as carbon fiber, Kevlar, honeycomb or fiberglass) in a structural application is prohibited, except as specifically allowed in these rules. Stress bearing panels are not permitted except as specifically allowed in these rules. Stress bearing panels are defined as sheet metal affixed to the frame by welding, bonding, rivets, bolts, or screws which have centers closer than 150mm.

B. The soles of the driver's feet shall not extend beyond the front edge of the wheel rims (in normal position; i.e., pedals not depressed) and shall remain behind the front bulkhead. The lower mainframe tubes shall be a minimum of 25cm apart (inside dimension) from the front bulkhead to the rear roll hoop.

C. The area between the upper and lower mainframe tubes from the

front roll hoop bulkhead to the rear roll hoop bulkhead shall incorporate one of the following:

1. Panel(s), minimum of either .060 inch heat-treated aluminum (6061-T6 or equivalent) or eighteen (18) gauge steel, attached outside of the chassis tubes.
2. Reinforced body - at a minimum, consisting of a double layer, five (5) oz., bi-directional, laminated Kevlar material incorporated into the body which shall be securely fastened to the frame.

For either method, fastener centers shall not be closer than 150mm (no stress-bearing panels). The material used for the chassis braces in this area shall be at least equivalent to the roll hoop brace material.

D. A stress-bearing floor pan/undertray is permitted between the front bulkhead and the rear axles. Composite or stabilized materials shall not be used for stress-bearing panels. The mountings for brake and clutch pedals and cylinders (front bulkhead), instruments, (front roll hoop bulkhead), and rear roll hoop bulkhead (behind the driver) may be stress bearing panels, also. The firewall portion of the rear roll hoop bulkhead (panel) shall extend the full width of the cockpit. Forward facing air ducts may be installed to deliver air directly to the engine area. Air duct openings may be located within the cockpit provided the firewall is extended to prevent flame and debris from reaching the driver. (Any shape may be used to form the firewall extension.) All firewall inlets shall prohibit passage of flame and debris.

E. Brackets for mounting components, such as the engine, transmission, suspension pickups, instruments, clutch and brake components, and body panels may be ferrous, aluminum alloy, or magnesium alloy, of any shape, and fastened to the frame in any manner.

F. No engine oil or water tubes are permitted within the cockpit.

G. It is not permitted to construct any suspension member in the form of an asymmetrical airfoil or to incorporate a spoiler in the construction of any suspension member. Symmetrical streamlining of suspension members is permitted.

H. Front and rear impact attenuation structures are strongly recommended. Impact attenuation structures shall be securely attached to the entirely sprung part of the car. Attachment of any front impact attenuation structure shall not extend more than 50mm to the rear of the front bulkhead. Impact attenuation structures may be fabricated from metallic and/or composite materials.

H.3. Bodywork and Airfoils

A. See Table 5. (Airfoils are a requirement for this class.) Forward-facing roll bar/roll cage bracing and required padding will not be considered in the cockpit opening dimensions shown in the table.

B. The driver's seat shall be capable of being entered without the manipulation or removal of any part or panel, except the steering wheel and/or driver's head surround structure. The steering wheel and head surround must be removable by the driver without the use of any tools.

C. Carbon fiber is prohibited in any external panels or any panels licked by the airstream (e.g., radiator ducting or engine air inlet), with the exception of impact attenuation structures. Carbon fiber

may be used in internal panels and components (e.g., instrument panel, radio boxes) unless otherwise restricted.

D. The entrant shall designate a flat rectangular reference area with minimum dimensions of 30cm by 30cm. This reference area is located on the lower surface of the car (the surface licked by the air stream) between the rear of the front tire and the front of the rear tire. The center of the reference area must be no more than 75mm from the longitudinal centerline of the vehicle.

Between the rear of the front tire and the front of the rear tire, no point on the lower surface of the car (the surface licked by the air stream) shall be more than 25mm above the plane determined by the reference area designated by the entrant and on a line perpendicular to that reference plane. No point on the lower surface of the car may be below the plane determined by the reference surface on a line perpendicular to that reference plane, except as specifically permitted herein. Compliance with these requirements shall be accomplished by placing a straight edge on the reference surface designated by the entrant and verifying that the requirements are met. A maximum of four (4) rub blocks of maximum dimension 75mm by 125mm are allowed anywhere on the lower surface of the chassis, and may extend below the reference plane.

E. A diffuser is permitted behind the front of the rear tires. The diffuser may be divided internally into multiple sections. The radius of transitions between the diffuser sides and adjacent horizontal structures may be up to 25mm. The width of the diffuser, as measured between its sides and above any radiused transitions, may not exceed 95cm in any lateral section. Strakes within the diffuser are allowed.

F. Movable aerodynamic devices, including aerodynamic skirts, are prohibited.

G. The maximum permitted width of the bodywork is 150cm. The width of the entire lower surface of the car between the rear of the front tires and the front of the rear tires shall not exceed the maximum width of the bodywork by more than 50mm and shall not exceed 150cm.

H. The safety roll bar/roll cage and engine air box are not included in the maximum height restriction (dimension C in Table 5).

H.4. Engines

A. Motorcycle-based 4-cycle up to 1000cc.

B. Engine internals and compression ratio must remain stock. The competitor must present, on demand, an original factory manual for the engine to allow compliance verification.

C. The stock ECU shall be used. The ECU fuel map may be changed. Devices that modify inputs to the ECU (e.g., Power Commander) may be used. Stand-alone after market ECUs are not permitted.

D. Turbochargers and superchargers are prohibited.

E. Carburetion and fuel injection are unrestricted.

F. The exhaust system and exhaust manifold are unrestricted, within SCCA safety regulations.

G. The lubrication system is unrestricted. A dry sump system is permitted; any oil pan and/or baffling is permitted.

H. Oil coolers are unrestricted.

I. The cooling system is unrestricted. Radiators, if housed in or incorporating a cowl air-scoop deflector, shall comply with bodywork rules.

J. The stock chain tensioner may be replaced with any mechanical chain tensioner.

H.5. Inlet Restrictors

The air inlet system is unrestricted at this time. However, the CRB may require the use of an inlet restrictor at any time by publishing the requirements in FasTrack.

H.6. Fuel system

The fuel system is unrestricted within the following limitations:

A. Fuel Cell Vents: Fuel tank air vents shall be located at least 25cm to the rear of the cockpit.

B. Fuel capacity: maximum 10.83 gallons.

H.7. Electrical System

The electrical system is unrestricted within the following limitations:

A. Self-starter: Cars shall be equipped with an on-board self-starter and an on-board power supply controlled by the driver while in a normal driving position.

H.8. Transmission/Final Drive

A. Rear wheel drive only is permitted.

B. The final drive ratio is unrestricted. Internal transmission gears shall remain stock.

C. Cars may use sequentially shifted motorcycle transmissions. Reverse gear is not required.

D. All gear changes must be initiated by the driver. Mechanical gear shifters, direct-acting electric solenoid shifters, air-shifters and similar devices are permitted. Devices that allow pre-selected gear changes are prohibited.

E. The clutch assembly is unrestricted.

F. Any open, limited-slip, or locking differential is permitted. Electronic control of the differential is prohibited. A solid axle or spool is permitted.

H.9. Suspension

A. All suspension components shall be of steel or ferrous material, except that hubs, hub adapters, hub carriers, bell cranks, pivot blocks, bearings and bushings, spring caps, abutment nuts, anti-roll bar links, shock absorber caps, and nuts may be aluminum alloy or magnesium alloy.

B. Springs: steel only.

C. Shock absorbers: Steel or aluminum alloy body.

D. Control arms and all associated items that attach directly to the chassis members shall be boxed in or captured to prevent intrusion into the cockpit.

E. Front A-arms shall be equipped with anti-intrusion bars to limit intrusion into the cockpit.

H.10. Brakes

Unrestricted, except:

A. All pistons in a given caliper must be of the same size. Calipers must be ferrous or aluminum alloy.

B. Brake rotors are restricted to ferrous material.

H.11. Steering
Unrestricted.

H.12. Wheels and Tires
Thirteen (13) inch diameter wheels with a maximum rim width of ten (10) inches are the only wheel sizes permitted. Material is unrestricted providing it is metal.

H.13. Minimum weight
Minimum weight is 1000 lbs.

F1000 Dimensions - Table 5	
Dimension (Refer to FC drawing)	Measurement (cm)
A. Maximum rear overhang from rear wheel axis	**80**
B. Maximum front overhang from front wheel axis	100
C. Maximum height measured from the ground	90
D. Exhaust height measured from the ground	20-60
E. Maximum height of any aerodynamic device	Rim height
H. Maximum width of entire car	185
I. Maximum rear aerofoil width (includes endplates)	95
J. Maximum width of body and lower surface of the car behind the front wheels	150
K. Maximum front wing width *(includes endplates)*	**135**
L. Minimum cockpit bodywork opening	**45**
M. Minimum cockpit parallel opening length	**30**
N. Minimum cockpit overall opening length	**60**
S. Maximum exhaust length from rear wheel axis	**80**
7. Minimum wheelbase	**200**
5 & 6. Minimum track	**120**
Maximum diffuser width	**95**

Note: Maximum height is measured with the driver aboard. The safety roll bar/roll cage and engine air box are not included in the maximum height restriction (dimension C).

I. FORMULA FIRST

I.1. Definition

1. Formula First is a class for single seat racing cars based on components from the standard Volkswagen Types 1 sedan, as originally manufactured by Volkswagen from 1966 to 2004. Since it is a restricted class, all allowable modifications are stated herein. The purpose of the Formula First class is to emphasize driver ability and to encourage the participation of owner/builders and owner/preparers while using proven Volkswagen components (or exact replicas). Homologation is required for all cars registered after January 1, 1983. Homologation for FS classification is required on all Formula First cars.

2. No component of the engine, power train, front suspension, or

brakes shall be altered, modified, or changed, or be of other than VW manufacture (or an exact replica thereof), unless specifically authorized herein. Parts used are classified as original, made by VW parts, exact replacement parts usually bearing a VW part number used in the VW model range specified below. Finally, mass-produced direct replacement parts can be substituted for the original components if authorized in the rules. These direct replacement components must be constructed of original material(s) or an acceptable substitute, maintain the original function(s) and general dimension(s) of the VW components they replace. Furthermore, these replacement parts must be generally available to all competitors and offer no competitive advantage over the original VW parts. There are no exceptions. IF IN DOUBT, DON'T.

3. Any VW Type 1 component, of VW manufacture or an exact replica in size, shape, and material, may be used unless a specific part (VW or aftermarket) is specified.

4. All measurements given in these rules are exact unless a specific tolerance is stated. A car exceeding any measurement or outside a tolerance, BY ANY AMOUNT is not in compliance.

5. Any external surface of the suspension, brakes, and transmission/rear axle tubes may be painted, plated, or anodized.

6. Weights and Measurements
   1. Minimum weight, as qualified or raced, with driver: 1125 pounds
   2. Wheelbase minimum 81.5"; maximum 85.5"
   3. Front track maximum: 57" at zero camber & toe
   4. Rear track maximum: 55" at zero camber & toe
   5. Overall length: Maximum 140" (includes exhaust)

I.2. Suspension

1. Front Suspension

The front suspension shall be standard VW Type 1 sedan ball joint H-beam front suspension or an exact replica of one of them and dimensionally identical. The following modifications are permitted:

1. Lugs may be welded, brackets attached by welding or otherwise, and holes drilled in the ball joint H-beam to permit attachment of the beam to the chassis, and other components wholly or partially to the beam. Brackets may be welded to the torsion arms for the sole purpose of actuating the shock(s) and/or external mounted anti-roll bar and shall perform no other function.

2. Front spring(s) are unrestricted except that the front suspension lifting spring(s) must be a continuous unit measuring 37.63" (+ or - .13") in length, is completely housed internal of the torsion spring tube(s), and fit unaltered control arm spring sockets.

3. Removal of the shock towers above the upper H-beam tube centerline.

4. Relocation of the shock dampers is permitted. Shock dampers and their actuation are free providing that no VW components are altered, modified or changed unless specifically authorized herein. Bump rubbers with a maximum length of 2 ½" may be used to protect the shock(s)/chassis from bottoming. Use of related bump rubber packing washers/solid spacers is free. Coil spring mounted (coil-over) shocks are not permitted.

5. The use of any anti-sway bar or bars, internal or external, mounting hardware, and trailing arm locating spacers. The anti-sway bar fitted as part of the standard suspension may be removed. Sway bars may not be cockpit adjustable. Front suspension Z-bars are not permitted.

6. Replacement of torsion bar rubbers with spacers of another material.

7. Installation of ride height adjuster(s), constructed for use with standard VW spring packs, to the H-beam allowing rotation of the spring pack. One (1) ride height adjuster per torsion spring tube is permitted. No cockpit adjustment of ride height is permitted.

8. Removal of the brake backing plates.

9. Camber/caster eccentric adjusting nut may be replaced with an aftermarket nut of different design. Caster, camber, and toe-in are free.

10. Any wheel bearings that fit the VW type 1 spindles and disk brake hubs without modification may be used.

11. Steering column may be altered or replaced. Steering wheel is free, and may be detachable. Steering mechanism is free, but tie rods must attach to the spindle using existing steering arm, a modified steering arm, or a suitable new or modified bracket welded to the spindle. Ball joints in the tie rods may be replaced with rod ends.

2. Rear Suspension
   1. The rear axle and tube assembly shall be standard VW Type I up to 1966, sedan swing axle (no outer pivot point for a half shaft) with axle location provided by a single locating arm on each axle. The rear axle tube may be rotated about its axis. The standard shock mounting and brake pipe brackets may be removed. Rear axle O.A. length: 26 11/16″ + or – 1/8″.

      1. The rear axle bearing retainer flange mating surface may be machined, or shims may be installed under the rear axle bearing, for the sole purpose of adjusting bearing axial float.

   2. Springs, shock dampers, their actuation, and camber compensating devices are free.

I.3. Braking System

1. Standard VW Type 1 disc brake components must be used, including any standard VW Type 1 original or aftermarket direct replacement brake caliper constructed of cast iron material. Front rotor minimum weight: 13.0 lbs. each without wheel mounting studs.

   1. Caliper housing material may be removed on the outer radius surface of the outer piston housing to clear the inside of the rotating wheel. This metal removal shall only be to allow wheel clearance.

2. Any type pad material may be used on standard VW Type 1 brake pads.

3. Adapter plates may be fitted to allow mounting of front or rear brake calipers.

4. Cross-drilling or grooving of rotors is not permitted.
5. Rear brake drum assemblies must be removed and replaced with one-piece cast iron rear brake rotors with machined-in rear axle splines. Caliper mounting is free. Min. rotor weight: 15.0 lbs each, without wheel mounting studs.
6. The car shall be equipped with a dual braking system operated by a single control. In case of a leak or failure at any point in the system, effective braking power shall be maintained on at least two wheels.
7. A separate hand brake is not required. Removal of the hand brake and operating mechanism is permitted.
8. Brake lines may be of any suitable material, including steel braided lines.
9. Wheel mounting lug bolts may be replaced with studs.
10. All brake components must remain within the safety tolerances and minimum dimensions established by the component manufacturer.

I.4. Wheels and Tires

1. Wheels shall be 13″ diameter by 6″ wide. (+ or – 1/8″ for all dimensions).
    1. Wheels must be of one-piece construction and may be constructed of steel, aluminum, or magnesium, but each wheel must comply with a minimum weight of 10 pounds, less tire, wheel weights and valve stem assembly.
    2. Wheel bolt pattern is free, except that it must use 4 lug bolts or studs with lug nuts. No centerlocks. As a recommended standard, the common bolt pattern for Formula First is 4″x 4 bolt.
    3. Spacers between the wheel and rotor are permitted.
2. Tires shall be Formula F slicks in standard front and rear sizes and using a hard compound. The Region, Division and/or racing series sanctioning the races shall specify which manufacturer or manufacturer's tires meeting this general description shall be permitted.

Regional, Divisional and/or Race Series Tire Options:

1. Option 1. The spec tire manufacture for Formula First shall be Hoosier Tire. Front tires shall be #43130 20.0″x 6.0″ – 13″ R60 or R60A compound. Rear tires shall be #43302 22.5″x 7.5″– 13″ R60 compound or #43307 22.5″ x 7.2″ x 13″ R60A compound.
2. Option 2. The spec tire manufacture for Formula First shall be Goodyear Tire. Front tires shall be #807-366-068 3321 20.0″x 6.0″ – 13″ R600 compound. Rear tires shall be #870-274-068 2015 22.5″x 7.5″– 13″ R600 compound.
3. Option 3. The spec tire manufacture for Formula First shall be American Racer Tire. Front tires shall be 20.0″x 6.0″ – 13″ 133 compound. Rear tires shall be # 22.5″x 7.5″– 13″ 133 compound.
4. Inter divisional races or special events may choose to allow more than one tire option by listing the options allowed for said event in the event supplemental regulations.

3. Any tires (brand, size, tread or construction) fitting the 13 x 6 rims may be used when the Chief Steward declares a rain race.

I.5. Engine

1. The engine shall be the standard VW "1600" (1584 cc) twin port, unless otherwise stated in these rules.

    1. Engine components shall be assembled in standard configuration. Exceeding the wear limits specified in the VW manual or in other official VW guides is permitted provided that the specifications, tolerances, and dimensions specified in these rules are not exceeded.

    2. Standard engine reconditioning practices are permissible as set out below. Such machining shall occur on the same plane as original VW specification. It is not permissible to add metal or any other material to any engine component, unless specifically stated herein.

    3. Balancing of the following moving parts of the engine is allowed: pistons, connecting rods, crankshaft, flywheel, front pulley, and clutch disc and clutch cover. Balancing may not remove more material than is necessary to achieve the balance, except on those component parts where minimum weights are specified herein. The addition of weight to the clutch cover plate, for the sole purpose of achieving balance, is permitted.

    4. Polishing of the contact faces of moving parts is permitted.

2. 1584 cc engine dimensions
   Bore 85.7 mm maximum
   Stroke: 69.1 mm maximum
   Exhaust valve diameter: 32.10mm maximum
   Intake valve diameter: 35.60mm maximum
   Intake port dimension at head: 33 mm maximum
   Exhaust port dimension at head: 33 mm maximum
   Intake manifold horizontal inside diameter: 33 mm maximum
   Manifold casting maximum diameter at flange: 33 mm maximum
   Maximum valve lift: .455". Measured at Valve cap with 0" lash. An average of the four exhaust valves must be .455" or less and an average of the four intake valves must be .455" or less.
   Rod weight with bolt and small end bushing: Minimum 560 grams.
   Rod length, center to center: 5.35" to 5.45". Any piston rod may be used that meets the VW dimensional and weight specifications listed herein.
   Piston weight with pin: Minimum 515 grams.
   Minimum distance: Top of piston to top edge of #1 ring groove: 8.0 mm
   Crankshaft weight: 20 pounds minimum
   Flywheel: Clutch diameter 200 mm; weight - 12 pounds minimum
   Deck height: .045" minimum
   Cam followers: 90 grams minimum
   Rocker arms: 80 grams minimum (w/o adjuster)

3. Crankcase, Clutch and Flywheel

    1. Any 1200 or 1600 VW case or exact replica may be used. (Aftermarket competition cases that vary in design from the original VW case are not permitted.)

    2. Standard reconditioning of the case halves is permitted.

    3. The case may be drilled to accept an external oil cooler or oil filter.

    4. Generator/alternator, stand, and fan housing and fan may be removed.

5. Oil baffles may be installed. They must be housed completely within the original oil sump and crankcase.
6. An oil temperature sending unit may be installed in the crankcase.
7. Oil galley plugs may be replaced with threaded plugs.
8. Cylinder head studs may be replaced with studs of different material.
9. The crankshaft may be ground and the case may be machined to accommodate the use of the standard VW oversize/undersize crankshaft bearings, provided the crankshaft location is not changed. It may also be machined to permit installation of camshaft bearings.
10. The use of an aftermarket counterweighted crankshaft with standard VW stroke, index and journal sizes is mandatory. Bearings may be standard VW undersized/oversized and rods ground to accommodate them.
11. Crankshaft front pulley is free.
12. The flywheel may be lightened to a minimum of 12 pounds. Flywheel dowels may be reconditioned. Additional dowels may be added on the same face. The flywheel clutch plate surfaces may be machined.
13. Any 200 mm VW clutch disc, pressure plate and throwout bearing (or replacement replica) as fitted to the VW Type 1, 2 and 3 are permitted. The standard VW clutch actuation arm may be modified to allow its attachment to the standard VW clutch throwout bearing shaft in any appropriate position. Clutch shaft arm actuation (cable, levers, or hydraulic) is free.
14. Oil filler/engine vent(s), dry sump tank and catch tank(s) are unrestricted provided they meet section 9.3.
15. The installation of a crankshaft pulley oil seal is permitted.
16. The installation of case center main web location pins or shuffle pins are permitted.

4. Camshaft
   1. Only the Engle W110 camshaft is permitted. Specifications listed herein are for checking purposes only. Re-grinding of the Engle W110, or any camshaft, to meet or maximize these specifications is strictly prohibited.

      Cam lift: Exhaust and Intake .392” variance + .003”

      Lobe centers: 108 deg +/- 30 sec.

      Intake opens @ 19 deg. Intake closes @ 48 deg. (at .050” valve lift) (+/- 30 sec)

      Exhaust opens @ 55 deg. Exhaust closes @ 12deg. (at .050” valve lift) (+/- 30 sec)
   2. Cam timing (advance/retard) may be achieved by offset keys or adjustable cam gear. Cam timing may not be adjustable without disassembling the case. No form of VTEC, cockpit adjustment, or other variable cam timing is permitted.
   3. Cam gear must be of stock dimensions, including angle and width of teeth.

4. Cam followers may be reconditioned and/or may contain camshaft face lubrication holes.

5. Pistons and Cylinders

Pistons and cylinders shall be standard VW replacement parts or exact replicas. Any piston rings that can fit the standard grooves are permitted. Piston pin retaining clips may be replaced with Teflon buttons.

6. Cylinder Head

1. The original standard VW twin port cylinder heads or any direct replacement cylinder head that complies with the original standard VW twin port cylinder head dimensions listed herein are permitted.

   Reference list of some common manufacturers, part and casting numbers:

Auto Lineas	P/N 040-101-375 xx (Note: xx varies)	Casting “040”
Auto Lineas	P/N 043-101-375A	Casting “043”
Mofoco 040	P/N CHH 040	Casting “040”
OE VW Original	P/N 113-101-375 A	Casting “113”
OE VW Replacement	P/N 040-101-355	Casting “040”
OE VW Replacement	P/N 043-101-375H	Casting “043”

Other cylinder heads can be added as requested if the castings are the same dimensionally (e.g., combustion chamber volume, valve size and location) as an approved VW manufactured head. This allows casting duplicates that may be of better quality (longevity), appearance, and/or price.

2. The intake and exhaust ports are to remain in as-cast condition, except that material may be removed *from the intake ports* for the sole purpose of matching/blending up to 1.5 inches from the intake flange mating point and up to 1.5 inches from an intake valve seat. *Material may be removed from the exhaust ports for the sole purpose of matching/blending up to .75 inches from the exhaust flange mating point and up to 1 inch from an exhaust valve seat. The remainder of the ports must be untouched.*

3. The combustion chamber must hold a minimum of 47 cc, with valves in place.

4. Replacement of valve seats and valve guides with others of standard dimensions and material is permitted.

5. Valves and valve seats may not be reshaped. Valve to valve seat mating surface (figure 1) shall be cut as follows. The 45 deg valve seat width (figure 2) shall be maintained by cutting a 15 deg chamfer (figure 3) at the outside edge of the seat and a 75 deg chamfer (figure 4) at its inner edge. Seats cannot be refaced if too little material remains for a 15 deg chamfer to be cut without going beyond the boundary of the insert. If the chamfer extends to the head, the seat or the head must be replaced.

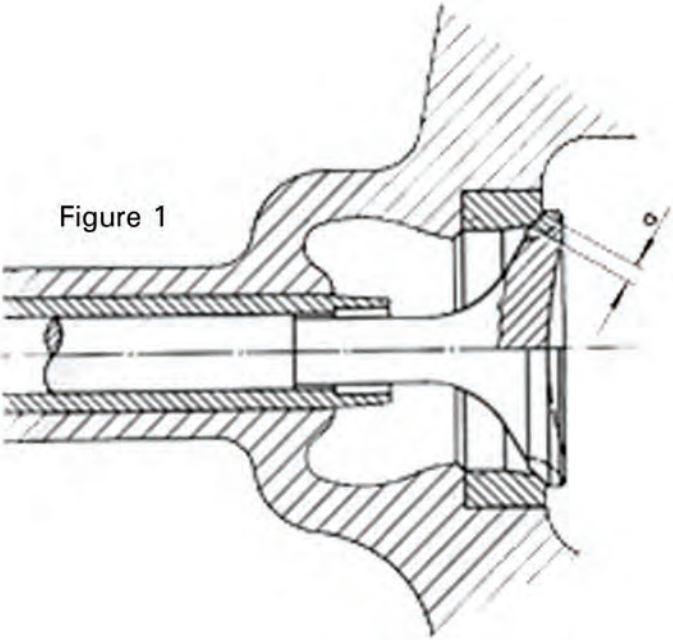

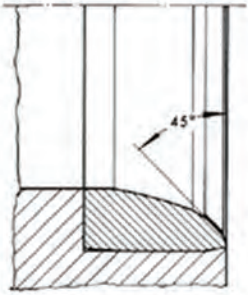

Figure 2

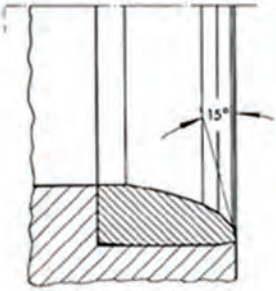

Figure 3

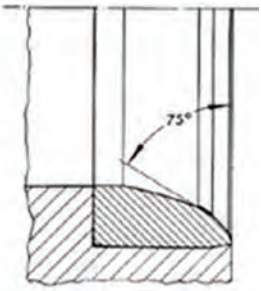

Figure 4

1. Valve specifications (figures 1 & 5):
Dimension "a" – valve seat contact width: Intake – 1.30 mm to 1.60 mm

Exhaust – 1.70 mm to 2.00 mm Seat contact angle on valve: 45 deg Intake and Exhaust

Dimension "A" – valve head dia: Intake – 35.56 mm max. Exhaust – 32.06 mm

Dimension "B" – valve length: 110.5 mm to 112.5 mm

Dimension "C" – valve stem dia: Intake – 7.94 mm min. Exhaust – 7.91 mm

Dimension "b" – valve head margin: Intake - .80 to 1.50 mm Exhaust – 1.00 to 1.70 mm

Dimension "d" – face angle of valve only: Intake - 44 deg Exhaust – 45 deg

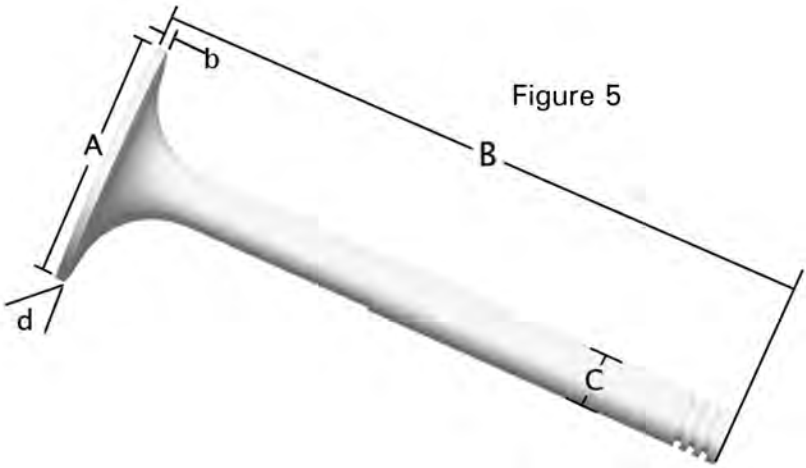

Figure 5

6. Stainless steel valves of the same dimensions as stock are permitted.
7. Single valve springs must be used, but are otherwise free except that no unauthorized modifications to other parts may be made to accommodate them.
8. Shimming of valve springs is permitted.
9. Combustion chambers are to remain in standard, as cast condition, except that fly cutting is permitted to obtain the permitted compression ratio. No other tooling or polishing of the combustion chamber is permitted.
10. Any aluminum or steel pushrod may be used. Length is free.
11. Only standard 1.1:1 ratio 1600 rocker arms may be used. The two bars need to be visible. Minimum rocker arm weight listed under 5.2.
12. Wavy washers in the rocker gear may be replaced with solid washers.
13. Swivel-foot valve adjusters may be used, provided that they are on the same center plane as the standard screw and offer no increase in valve lift.
14. The rocker shaft posts may be shimmed to restore original geometry after authorized fly cutting.
15. Spark plug holes may be repaired using standard thread repair methods, such as Helicoil inserts, providing that the spark plug centerline is not changed.
16. Valve covers are unrestricted and may be bolted on.
17. Push rod tubes are unrestricted.
18. Any ferrous metallic valve spring retainers and keepers are permitted.

7. Oil system
   1. Any standard VW Type I, or replacement replica in size, shape, and material, oil pump may be used. Oil pump pressure port plugging is permitted.

2. Any oil pump cover may be used.
3. A dry sump oiling system is permitted.
    1. The dry sump pump must bolt into the standard location, must be driven by the camshaft and have no more that two stages.
4. A sump extension may be fitted using or in place of the oil strainer cover plate. The oil pump pickup pipe may be extended into the sump extension. The sump extension shall not extend below the lower frame members surrounding the engine.
5. Any oil cooler is allowed provided it is located within the bodywork and behind the firewall.
6. An alternate oil pressure regulator spring or springs may be used.
7. A standard or racing type automotive oil filter of not more than one-quart capacity may be installed provided it is located within the bodywork and behind the firewall. No cooling fins are permitted on the filter or connecting lines. Connecting lines shall not exceed 12 feet in total length, including oil cooler connections if part of the oil filter circuit.

8. Fuel pump

Fuel pump is free. A block off plate may be installed if the mechanical fuel pump is removed.

9. Carburetor
    1. Only the Mexican made Bocar 34 PICT/3 replacement carburetor shall be permitted. The carburetor shall be in “as new” condition. The carburetor may be cleaned with commercially available “carb cleaner”. NO MEDIA BLAST CLEANING IS PERMITTED. Original replacement replica gaskets, float, needle & seat may be replaced as needed. Float level may be adjusted via shim(s) under the needle & seat. Only the modifications listed herein are permitted. If you don’t see it listed herein, you can’t do it, NO EXCEPTIONS.
    2. The choke plate, choke heater element and related components, choke shaft and related hardware may be removed and the shaft holes taped or plugged. Any air filter, air horn, or combination of filter and horn may be used.
    3. Modification or removal of the idle shutoff solenoid to allow air/fuel flow without power is permitted.
    4. Main fuel and air correction jet sizes are free.
    5. The carburetor may be rotated 180 degrees about its vertical axis.
    6. The choke heater element housing may be cut off the carburetor top housing.
    7. The fuel inlet must be threaded into the carburetor top housing, the original brass swaged in fitting is not permitted.
    8. Vacuum fittings may be removed and ports plugged.
    9. The full throttle stop bracket may be modified to allow for full throttle operation.
    10. Throttle plate screws shall be “as supplied” from Bocar, no grinding, filing or trimming on these screws, NO EXCEPTIONS.

11. NO OTHER TOOLING OR MODIFICATIONS ARE PERMITTED. REBUILDING IS NOT AN EXCUSE FOR MACHINING, MODIFYING OR CHANGING ANY DIMENSIONS OR ANY COMPONENT OF THE CARBURETOR, NO EXCEPTIONS.

12. Carburetor dimensions: Specifications listed herein are for checking purposes only. Re-working of the Bocar PCIT/3 to meet or maximize these specifications is strictly prohibited.

    Throttle plate thickness: .055" Minimum

    Throttle shaft thickness: .210" Minimum

    Venturi/Choke inside dimension: 26 mm Maximum

10. Intake Manifold
    1. The intake manifold shall consist of standard VW Type 1 1600 (1584 cc) twin port components, or direct replacement, unless stated otherwise in the following rules.
    2. The heat sink casting may be removed or modified.
    3. Other EXTERNAL modifications to the cast sections are permitted for clearance purposes, provided no performance advance results.
    4. The standard 1600 manifold end castings must be untouched internally other than for the purpose of port matching.
    5. Port matching to a depth of 1.0" into the manifold casting from the manifold/head joining surface is permitted.
    6. The official Formula First 32mm restrictor plate, *SR Racing part number SRA-FST-RESTRICTOR*, must be installed per the instructions below. Absolutely no modifications are permitted to the restrictor plate. Any defects or marks on the blue anodize is not allowed and must be exchanged immediately for a new official Formula First 32 mm restrictor plate. *Small external scratches are considered normal wear.*
        1. The official Formula First 32 mm restrictor plate must be installed/assembled exactly in the following order, using only the listed parts. No exceptions allowed.
            1. Intake manifold
            2. (1) Standard VW (or direct replacement) carburetor gasket
            3. Official Formula First 32 mm restrictor plate

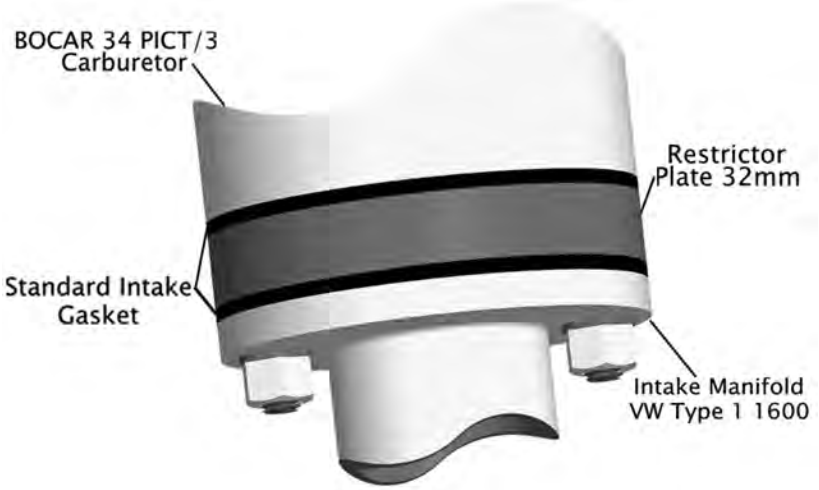

4. (1) Standard VW (or direct replacement) carburetor gasket
5. Bocar 34 PICT/3

2. Installation diagram supporting I.5.10.6.1.
3. Any Formula First car may be subject to a “spot check” for restrictor plate compliance. A spot check may be visual or may require a vacuum leak check performed as follows:
    1. Run engine at 2500 RPM
    2. Seal the carburetor air inlet
    3. Engine must stall within 4 seconds

7. All intake manifold vacuum fittings or ports must be plugged.

11. Engine cooling system
The air-cooling system for cylinders and cylinder heads is free, subject to limitations on bodywork. See I.5.7.7. with respect to oil coolers and lines.

12. Exhaust System
The exhaust system is free, but must comply with SCCA and local noise requirements and with overall body dimensions requirements.

13. Electrical System
1. 12-volt electrical systems shall be used.
2. The distributor must be a standard VW mechanical advance distributor, or Bosch 009, or a replacement replica, with the following modifications permitted.
3. The advance curve may be adjusted.
4. Standard Bosch or replica points may be replaced with an electronic replacement points set (Pertronix, Comp-U-Fire, etc.). The replacement set must be totally within the distributor.
5. Any coil is permitted.
6. Any 12v on-board automotive starter capable of starting the

engine from the driver's compartment is permitted.

14. Other non-standard components.
Use of the following non-standard replacement parts is permitted provided that no unauthorized modification of any component results: Any fasteners (nuts, bolts, screws, etc); wiring; gaskets and seals; fuel line; spark plugs; piston rings; fan belt; and connecting rod bearings, camshaft bearings, and crankshaft main bearings, provided the bearings are of the same type and size and VW standard or oversize bearings.

I.6. Transaxle

1. The standard VW Type 1, 2 or 3 swing axle type transaxle must be used in standard configuration unless stated otherwise in these rules. All five gears (including reverse) must be operable, and controllable from the driver's seat. Synchromesh must be operating on all four forward gears. A direct replacement transmission case, VW part # 081-301-051, or replacement replica, "Rhino" case is permitted.

2. Shock damper mounts may be modified or removed.

3. Transmission shall not be installed in an inverted position.

4. The crown wheel must be transposed in the transmission case.

5. The differential cannot be modified in any way to limit its normal function. Torque biasing, limited slip, and locked differentials are prohibited.

6. The following gear ratios must be used with the 1600(1584) engine:
1 - 3.80; 2 – 2.06; 3 – 1.26; 4 – 0,89; differential 4.125

I.7. Frame and Body

1. Frame

    1. The frame shall be constructed of steel tubing with a maximum cross section of 4". The driver's feet shall not extend forward the rear edge of the front axle beam tubes.

    2. No frame/chassis rigidity or strength shall be derived from anything other than the steel frame tubes. No stressed skin, monocoque, or semi-monocoque construction is permitted.

    3. The firewall panel must extend the full width of the cockpit and be at least equal to the top of the carburetor in vertical height from the floor pan may be rigidly attached to the frame tubes.

    4. The undertray(s) or belly pan(s) shall be rigidly attached to the frame provided that the curvature of said undertray(s), measured vertically from the lowest point to its highest point at its attachment point to the frame rail member at its sides, shall not exceed 1" and have no downward turned edges. Undertray(s) or belly pan(s) shall not extend more than ¼" beyond the vertical line of the closest mating bodywork.

    5. The area between the upper and lower main frame tubes, or at least 14" above the undertray(s) or belly pan(s) whichever is greater, from the front roll hoop bulkhead to the main roll hoop bulkhead shall be protected by one of the following methods to prevent the intrusion of objects into the side of the cockpit area. For either method, fasteners shall be no closer than an average of 6" centers (no stress bearing panels). The material used for chassis braces in this area shall be at least equivalent

to roll hoop brace material.

1. Panel(s): Minimum of either .060" aluminum (6061 T-6 or equivalent) or 18 gauge steel attached outside of the main frame tubes.
2. Reinforced Body: Minimum 2-layers of 5 oz. bi-directional Kevlar material laminated to the inside of the bodywork and securely fastened to the frame.

2. Body
   1. The body shall be constructed of fiberglass, aluminum, steel, Kevlar, carbon fiber or any combination thereof.
   2. The body must not be rigidly attached so as to form part of the structural integrity of the car.
   3. Rear (Tail) Bodywork: The rear bodywork shall extend from the firewall to a point at least 16" aft of the rear axle centerline.
   4. Front (Nose) Bodywork: Any bodywork forward of the front beam torsion spring tubes shall have a maximum width of 31.75" (80.65 cm)
   5. Main (Center) Bodywork: No part of the frame or bodywork shall project beyond a plane connecting the vertical centerline of the front and rear tires. Fuel filler necks, caps or lids shall not protrude beyond the bodywork of the car. The bottom of any bodywork that extends below the frame members shall be on the same flat plane as the undertray and shall not deviate from that flat plane by more than 1".
   6. Cockpit Opening: The driver's seat shall be capable of being entered without the removal or manipulation of any part or panel (except for a removable steering wheel and removable cockpit padding). The cockpit opening of the bodywork shall have the following minimal dimensions: Length: 60cm (23.622 inches) Width: 45cm (17.717 inches). This width extends over a length of 30cm (11.811 inches) minimum. This minimal rectangular opening may exist anywhere forward of the bracing, and required padding will not be considered in these dimensions.
   7. Air Ducting: Air ducts may be installed for the purpose of delivering air to, or extracting air from the cylinders, cylinder heads, oil cooler and/or carburetor. Air duct opening(s) may be located within the cockpit area and/or penetrate the firewall provided the duct(s) design and construction would prohibit flame and debris from reaching the driver.
   8. Aerodynamic Devices: Wings are prohibited. Any device specifically designed to use air speed to create aerodynamic downforce is prohibited.

J. FORMULA ENTERPRISES PREPARATION RULES

1. Definition

One design, fixed specifications, open cockpit, single seat Formula car with Mazda 2.3 engine. Cars are packaged and sold by SCCA Enterprises, Inc. All replacement parts are supplied through SCCA Enterprises, Inc., and shall be official Spec Formula Car parts except where noted in J.4.

2. Safety Requirements

Car will be delivered from the manufacturer with approved safety equipment. Replaced items shall be supplied through SCCA Enterprises, except safety harnesses may be replaced by any other that conforms to GCR Section 9.

3. Vehicle Configuration
All cars to GCR section 9 with the following exceptions: Section 9.3 Accumulators.

4. Maintenance and Repairs
It is permitted to perform routine maintenance and repairs as long as existing parts are in no way modified and replacement parts are official Enterprises Formula Car parts. If any official Enterprises' seal is broken, lost by accident or intent, the procedures outlined under J.18., shall be followed. Parts and materials with an Enterprises part number having the prefix "WM10" are considered to be unrestricted, providing their dimensions and materials are comparable. No other parts are to be considered "unrestricted" except where specified.

5. Chassis
NO MODIFICATIONS ALLOWED except as noted in these rules.

a. All cars shall use the stock, as delivered by Enterprises, wood floor of 6mm, with an allowable deviation of 3 mm across the surface for wear.

b. Seats are free. Panels inside the cockpit may be attached to the frame as long as the points of attachment are no closer than 6 inches apart. No welding or gluing of the seat to the structure of the car is allowed.

   Definition of cockpit is: area between the front roll hoop and rear roll hoop.

c. Painting or powder coating of the chassis is allowed.

d. Enterprises foot drop box part # WM180020J may be installed.

e. Enterprises impact attenuator part #WM180023 (crush box) shall be installed.

6. Bodywork
NO MODIFICATIONS ALLOWED (except as specified). If any seal, label, stamp is missing the parts must be returned to Enterprises for resealing.

a. Bodywork shall remain unmodified with the exception of holes for a slave or jumper battery plug, trackside beacon receiver, and tow hooks. All repair work must match original body dimensions and contours.

b. Bodywork fasteners are free.

c. The car may be painted any color(s), except primer.

d. It is required that all cars display the official sponsors of Enterprises decals and locations as specified by Enterprises.

e. Radiator screens are allowed and recommended.

f. All aerodynamic devices shall be used as delivered: i.e. wings, body winglets. No modification to mounting location or holes.

g. The front wing main plane, front wing secondary elements, front wing support mounts, and front wing endplates must be used and mounted as delivered from Enterprises. Any modification to these parts is strictly forbidden. The main wing plane angle is zeroed on the rear upper aft transmission surface measured with a suit-

able angle gauge, i.e.: digital level on the top main plane 2 inches outward from the nose box mounts. It must meet a minimum measurement of negative .5 degrees (angled down in the back) and a maximum measurement of positive 2.5 degrees (angled up in the back). It is acceptable to shim the main plane to obtain this measurement.

h. The rear wing and its related mounting components are to be used and mounted as delivered. Any modifications are strictly prohibited. The lower plane angle, zeroed on the rear upper aft transmission surface, measured with a suitable angle gauge. i.e.; digital level on the top surface of the lower rear wing must meet a minimum of −3.0 degrees (angled down in the back) and a maximum of +2.0 degrees (angled up in the back). It is acceptable to adjust the lower rear element to meet these requirements. The upper rear wing element may only be adjusted within the parameter of the endplates and wing adjusters as provided from Enterprises. No additional holes may be added.

i. The stock headrest may be modified or replaced with any headrest meeting GCR section 9.4.1.B. The stock lateral bolsters may be modified or removed.

j. Enterprises windscreen P/N: WM137000 is allowed.

7. Engine and Drivetrain

a. Engine

1. NO MODIFICATIONS ARE ALLOWED EXCEPT WHERE SPECIFICALLY AUTHORIZED WITHIN THESE RULES. This includes all fuel injection and engine management components, including exhaust, cooling, electrical and lubrication systems. All systems are subject to test procedures and must conform to OEM specifications as stated and supplied by Enterprises. All fluids, except fuel, are unrestricted.

2. Enterprises, Inc., seals on the engine, and other components shall remain in place at all times. All engines shall be rebuilt, checked on an engine dynamometer, and sealed through Enterprises.

3. Engine maintenance, which is permitted, includes the replacement, but not modification of external engine and engine systems parts.

4. There are six (6) seals on the engine. Two (2) on the timing cover, two (2) on the top of the valve cover, and two (2) on the oil sump. They may not be removed or tampered with.

5. All rubber oil lines may be replaced with braided metal-covered (Aeroquip type) lines. Hose clamps may be installed on the rubber oil lines.

6. Intake manifold: No modifications are allowed. Absolutely no porting or the addition of material is allowed. No coating is allowed on the exterior or interior of the manifold.

7. Engine Control Unit (ECU): Manufactured by MBE and sealed by Enterprises. Tampering of the ECU, ECU program, seal, wiring or sensors is prohibited.

8. The flywheel weight is a minimum of 2.6 pounds for the Enterprises supplied flywheel. No modifications to the flywheel with the exception of normal resurfacing for clutch wear are allowed.

9. No modification to the crankshaft dampener is allowed.

The following parts must be used:

10. Clutch: Enterprises supplied clutch and flywheel contained in kit #WM701000A, Piston #WM701004A, Throw out bearing #WM701006A, Small O-ring #WM1010405, Large o-ring #WM1010406, Flexplate and Ring Gear # WM1101053.
11. Spark Plugs, Part # NGK PTR5F-11, NGK ITR5F-13, or Motorcraft # AGSF32FEC.
12. Fuel Injectors: Part # WM591929
13. Throttle Body: Part # WM591930
14. Fuel Filter: *Any 10 micron fuel filter may be used as long as it performs no other purpose than to filter fuel.*
15. Air Filter: Part # WM301020
16. Exhaust systems may be thermal coated or wrapped.
17. A heat shield between the engine block and the exhaust system is recommended for the purpose of protecting hoses, shifter cable, and wiring from the heat of the exhaust.
18. An Enterprises muffler kit part # WM301046 is required. The muffler may not extend beyond the back of the transmission. An additional muffler may be added to accompany the stock muffler as needed to meet sound requirements.
19. An optional air to oil cooler is allowed. The maximum core size is 13 inches wide by 6.5 inches high. No water to oil heat exchanger is allowed.
20. An optional Enterprise alternator kit is allowed, Part # WM1100101

b. Transmission

1. The 5 speed sequential transaxle supplied by Enterprises is the only permitted gearbox. The casting has to remain original. No internal or external modification (including lightening) other than normal racing repair.
2. The servicing, replacement and modification of internal components is permitted by the competitor. With the following exceptions:
   a. All components must be ferrous metal, except for bearing retainers and bearing cages.
   b. Components manufactured by alternate manufacturers are permitted. Replacement components must be direct replacements to the original components. Absolute minimum weights are listed below.
3. The rear cover plate may manufactured or remanufactured using aluminum.
4. Only the following gear ratios are permitted:
   1st gear combination 12:29 Ratio number 2.41
   2nd gear combination 15:28 1.86
   3rd gear combination 16:24 1.50
   4th gear combination 18:22 1.22
   5th gear combination 24:26 1.08

5. Differential – Only final drive ratio allowed is 2.75. The differential must remain an open differential. No limited slip mechanism is allowed. Differential must work as supplied (no tightening of the differential to limit slip) Must be able to use existing components.

6. Polishing, shot peening, REM© Isotropic treatment, heat and cold treatments are allowed. No coatings or plating is allowed.

7. *Any mechanical device may be used between the shift lever and the transmission barrel to provide the required actuation. No electronic or pneumatic devices are allowed. Gear position indicators are allowed.*

8. Throttle cable is free, but must remain cable operated.

MINIMUM WEIGHTS OF THE FOLLOWING PARTS
Differential Housing (both parts including bearings) 7.4 lbs
Ring Gear 3.6 lbs
Pinion Shaft 4.0 lbs
1st gear 2.7 lbs
2nd gear 1.2 lbs
3rd gear 1.1 lbs
4th gear 1.1 lbs
5th gear 1.0 lbs

8. Suspension

a. NO MODIFICATIONS ALLOWED. Adjustments are permitted within the limits of the suspension and steering components. All rod ends shall be engaged at least 1.5 times the diameter of the end.

b. Front Springs: 600 lbs. ±25 lbs. Part # WM203008. Wire size shall measure .360″ ±.005″.

Rear Springs: 1000 lbs. ±25 lbs. Part # WM203009. Wire size shall measure .410″ ± .005″.

c. Competitors may use the entire travel of all suspension adjusted components as delivered. Alternate parts are not allowed.

d. All suspension parts shall have the SCCA code embedded (a label/ or an Enterprises stamp) in the part. If they do not it is required to return part to Enterprises for proper labeling.

e. Rod ends may be replaced with rod ends having specifications equal to or greater than the OEM supplied rod ends. This includes dimensional material and strength specifications. Replacement rod ends shall be capable of being installed with no modifications to any original components.

f. Anti-roll bars (sway bars) may be disconnected, but not removed.
Anti roll bar sizes:
Front .875″ OD ±.005″
Top Tee .750″ x .135″ wall, ±.005″
Top Tee Length: 7.5″ maximum end to end
Rear lower stalk .615″ Dia. ±.005″
Upper stalk .765″ ±.005″
Arm length 5.470″ shoulder to shoulder

Optional Front Sway Bar: Rotating blade style with or without cockpit adjustment. Minimum blade thickness 0.155″ ±.005″ Main Shaft diameter 0.590″ ±.005″, Length 6.006″ ±.010″. Cockpit adjustable full bar kit PN: WM1121008. Bar kit only (with set screw lock) PN: WM1121007

9. Shocks

a. NO MODIFICATIONS ALLOWED. 4 Bilstein Shocks, Part # WM203001 or 4 Penske shocks, Part # WM1180090. Same type on all 4 corners.

b. Only shims provided on the shocks are legal (no bump rubbers, packers or modification to shims).

c. Adjustments for the Bilstein will be at the spring perch and with pressure (if rebuilt). Adjustments for the Penske will be at the spring perch or with the rebound adjuster.

d. Bilstein shocks may be used in the original configuration or may be rebuilt. Both shock types can only be rebuilt by Enterprises or its authorized rebuilder.

e. All shock absorbers must be sealed by Enterprises or its authorized rebuilder.

10. Steering

NO MODIFICATIONS ALLOWED, except as described within these rules

a. An alternate steering wheel may be used. “Butterfly” style steering wheels are not allowed.

b. Upper steering shaft may be modified to accept an alternate steering wheel and/or hub (if applicable). It may also be modified to accommodate a larger driver.

11. Brakes

NO MODIFICATIONS ALLOWED, except as described within these rules. Only the AP 4 PISTON CALIPER BRAKE SYSTEM AS SUPPLIED WITH VENTED ROTORS as supplied by Enterprises shall be used

a. Brake pads as labeled and supplied from Enterprises.

b. Brake rotors are used as delivered, no drilling or lightening is allowed. Minimum Diameter is 10.450”. Part # WM801002x Left, Part # WM801003x Right. Min width is .600”

c. Master cylinders must be the Girling type.

Front master cylinder is.700” piston diameter, Part # WM802005

Rear master cylinder is .750” piston diameter, Part # WM802006

d. Calipers must be AP 4 piston. Part numbers are:

LF # WM802004 RF #WM802003

LR # WM802002 RR # WM802001

e. Brake lines are free (no plastic allowed).

12. Wheels (Only wheels supplied by Enterprises)

NO MODIFICATIONS or MACHINING ALLOWED Aluminum racing wheel supplied from Enterprises with SCCA logo. If logo is worn off or wheels that have been painted or powder coated, wheels must be inspected by Enterprises or one of their designated Customer Service Representatives and logos replaced.

Front: 8 in X 13 in Part # WM 205001

Rear: 10 in X 13 in Part # WM205002

a. All wheel bearings shall be run with grease (not oil), no special coatings are allowed, and the bearing grease seal shall be intact. No ceramic wheel bearings are permitted.

b. Wheel spacers are not allowed.

13. Tires

Tires must run in sets of 4 as stated below:

Hoosier R45, R45A, or R45B (SCCA Labeled) Compound
Front: PN: 43270, 21.5 in X 8.0 in X13.0in
Rear: PN: 43301, 22.0 in X10.0 in X 13.0 in

Hoosier Wet Compound
Front: PN: 44195, 21.5 in 7.5 in X 13.0 in
Rear: PN: 44217, 22.0 in 9.0 in X13.0 in

a. A competitor shall start the race on tires used in a qualifying session for the race as identified by markings made on the tires by a race official. It is the responsibility of the competitor to ensure that his or her tires are appropriately marked prior to (e.g. on the false grid), during, or immediately after (e.g. as the car leaves the track) a qualifying session.

b. For races with more than one qualifying session, a competitor shall start the race on any marked tires from any qualifying session for the race.

c. If a competitor chooses to start the race on any tires that were not used in a qualifying session for the race and not appropriately marked, the competitor shall forfeit his or her grid position and start from the back of the grid. This forfeiture of grid position shall not apply if all qualifying sessions for the race were run under rain or wet conditions.

d. A complete set of four (4) rain or wet track tires may be used at the competitor's discretion for any race. Rain tires may be in new or used condition and require no special marking if used as a complete set of four.

14. Electrical System

NO MODIFICATIONS ALLOWED, except as described within these rules.

a. Wiring harnesses must remain as delivered.

b. Battery may be replaced with a larger one as long it remains in the same location.

c. Battery wiring is free. Car must shut off when master switch is turned off.

d. Any instrumentation is allowed.

e. Data acquisition is allowed, no telemetry is allowed.

f. Any rain light is allowed.

15. Weight

The car shall weigh 1250 lbs. minimum, including the driver.

a. Ballast must be placed between the front dash bulkhead and the front engine bulkhead. They shall be fastened securely to the floor with flat head 5/16 bolts, washers and nuts on both ends of the weight.

16. Updates

Provisions will be made for updates on all safety and mechanical improvements. Such updates will be effective when authorized by Enterprises, announced by the National Office, and published in FasTrack.

17. Vehicle Logbook

The Vehicle Logbook for each Enterprises Formula Car remains the property of Enterprises and will contain not only the record of technical inspections, but also the major maintenance performed and all transfers of ownership. The Vehicle Logbook number will be the same as the factory chassis number that is stamped on the name plate mounted on the fuel cell behind the driver's shoulders. When the vehicle is sold, traded, or scrapped, the logbook shall be sent to SCCA Enterprises, Inc.,. 14550 E. Easter Ave Suite 400 Centennial, Co. 80112. The logbook will them be reissued to the new owner. When the logbook has been filled, a new one shall be requested from SCCA Enterprises, Inc.

A FEE OF $200 WILL BE CHARGED FOR LOST LOGBOOKS.

The logbook shall be presented at scrutineering for each event entered. All Enterprises Formula Cars are subject to normal safety inspection. Additionally, scrutineers will check each official seal. A competitor may not be barred from competing at a specific event if a seal is broken, damaged, lost or part not properly labeled but the part may be considered suspect and will be treated as such and will be required to be sent back to Enterprises for inspection. If engine cam cover or oil pan seals are broken, damaged, or missing, the engine shall be removed and sent to Enterprises for testing and resealing. The competitor will bear all expenses at the competitor's cost prior to the next event.

18. Seals

Enterprises engine seals are required for all races. Any competitor who runs an event without all proper engine seals in the required locations shall have his engine removed and shipped to Enterprises for testing and sealing after that event. The competitor will be responsible for all cost incurred by this procedure regardless of the findings, and subject to penalty by the SOM if engine is found to be not as specified.

SCCA Enterprises, Inc., seals are required on all Formula Car Engines.

Any counterfeit engine seal found by an authorized representative of SCCA, Inc., or SCCA Enterprises, Inc., shall immediately render that engine illegal for further use, without need of dyno testing or inspection. Enterprises, Inc., will not be under any obligation to bring an illegally sealed engine back to legal condition. Penalties shall include all of the following: 19.1., 19.2., 19.3., and 19.4.

19. Penalties (Specific to Enterprises Spec Cars)

If a competitor refuses to give his engine and/or unlabeled parts for testing per a request of the Chief Steward, the following penalties will automatically be imposed:

a. Vehicle logbook will be impounded.

b. Disqualification from the event.

c. Suspension of SCCA competition privileges for thirty (30) days.

d. The car and drive train are suspended from competition until the unit(s) specified by the Chief Steward are replaced.

In a case where a competitor does comply with the Chief Steward's request to have an engine and/or parts inspected and the impounded unit(s) are found legal, the SCCA, will stand all the costs incurred for the testing, including shipping. Should the impounded unit(s) be found illegal, the following penalties will be imposed:

1. Disqualification from the event.

2. A fine of $250.00.

3. $500.00 testing fee plus freight charges paid to Enterprises.
4. Competition privileges will be suspended immediately, and the suspension will continue for a minimum of thirty (30) days after the date when all fines and costs are paid in full and the license is received by the Chairman SOM or the SCCA Topeka Office.
5. For a second illegal drive train offense, the competitor will be permanently disqualified from further Enterprises Formula Car competition.

20. Enterprises Formula Car Drive Train Protest

a. Protests shall be filed per the GCR.

b. Protestor will specify the drive train item suspected (i.e., transmission or engine). The teardown bond to remove the motor and transmission is in three (3) parts:

   1. Remove and replace motor and transmission - $400.00
      a. Will be done by an SCCA representative or other shop that is equipped for this type of work and will be paid directly.
   2. Ship motor to Enterprises and test - $500.00 plus freight and crating charges
      a. Enterprises will inspect the motor, (item 2), and will notify the Chairman SOM as soon as possible as to the results.
   3. Protest Fee: Regional - $25.00, National - $50.00.

c. Enterprises shall retain the evidence, and the SCCA shall retain the fee, (item 3), until the period for appeal has passed.

d. The Chairman SOM is required to inform Enterprises of the protest using the FE Protest Information Form. A copy of the protest shall be sent to Enterprises.

   If the protest proves to be valid and any appeal fails, the protest fee, (item 3), will be returned to the protestor. Also, the protestee will be required to reimburse the protestor the remaining fees ($900). The protestee will not be allowed to compete again until all costs are paid. If found legal, the protester forfeits fee (items 1 and 2) above.

e. If found illegal, competition privileges will be suspended immediately, and the suspension will continue for thirty (30) days after all costs are paid in full.

f. For a second illegal drive train offense, the competitor will be permanently disqualified from competing in FE competition.

21. Accessory Items

a. Mirrors are free.

b. Two-way radios may be installed in the car. All components shall be securely attached and approved by Tech inspection.

c. Racers tape may be used to repair crash damage, or as a precautionary means of securing the body retaining latches. Crash-damage is defined as having occurred during the current event, and the tape should be of an appropriate color if possible. Taping of body joints is not allowed

d. The spark plug wires may be fire sleeved and may be loomed, but must be original Mazda wire as supplied by Enterprises.

e. Engine compartment fluid hoses may be insulated using heat shield or wrap.

f. Front and rear tow hooks are required, see GCR section 9.3 Towing Eyes.

NOTES:

Unleash the Energy.

Sunoco® 260GT™ gives you that competitive edge you want in order to stand out from the pack. While it's perfect for the track, Corvettes, BMWs, Porsches, and other high-performance cars will love it too!

SUNOCO

RACE FUELS

The Official Fuel of SCCA

More engine builders, racers, tracks and sanctioning bodies choose Sunoco than all other racing gasoline combined. To find the locations in your area that carry Sunoco 260GT, or any other Sunoco Race Fuel blend, race to www.RaceGas.com today!

www.RaceGas.com | 1-800-RACE-GAS

© 2010 Sunoco, Inc. (R&M)

9.1.2. GT CATEGORY SPECIFICATIONS

These specifications are part of the SCCA GCR, and all automobiles shall conform with GCR Section 9.

A. PURPOSE

The GT Category is intended to provide the membership and interested manufacturers with the opportunity to compete in purpose built, highly modified replicas of series produced automobiles. To that end, cars shall be classified in GT Classes based on their competitive potential. The Club may alter or adjust specifications and require, permit, or restrict certain specific components to equate competitive potential.

B. INTENT

It is the intent of these rules to allow modifications useful and necessary in the construction and preparation of an extremely high performance road racing vehicle. It is understood that such a vehicle can be updated and/or changed from marque-to-marque, based on member interest and manufacturer incentive. With this in mind, the Club will use the following guidelines in the determination of the suitability for classification in the GT Category:

1. Basic vehicle size, shape, engine displacement, and cylinder head design of the standard and/or alternate engine(s).
2. Member interest.
3. Manufacturer interest and potential support to competitors.
4. Vehicle production quantities of no less than 3000 units of the specified make/model within a twelve (12) month period, all such units being approved by the EPA and DOT for sale in the United States (Production Cars that have been reclassified into the GT Category need not meet minimum production quantities).

C. SPECIFICATIONS

The SCCA shall publish the GT Category Specifications (GTCS) containing recognized specifications for each car eligible to compete in the GT Category during the calendar year. Cars shall be listed according to the manufacturer's make and model designation. In the case of doubt involving specifications not adequately described in the GTCS, Scrutineers/Stewards may refer to maintenance manuals, spare parts books, general catalogs and performance catalogs published by the vehicle manufacturer, MVMA specifications, and FIA Homologation Certificates for the make and model, or may inspect other cars of the same make and model.

1. GT Category automobiles shall be divided into Classes based on relative performance as follows: GT1, GT2, GT3, and GTLite.
2. Cars may be updated or backdated within the specifications of the recognized make and model as listed on the Approved Automobile List of the GTCS (GT-1), or as listed on a single GT Specification Form line of the GTCS. Any classified engine may be used in a classified chassis within the same manufacturer as shown on the specification line.
3. Cars shall meet or exceed their minimum specified weight, as listed in the GTCS, as qualified or raced, with driver.
4. No permitted component/modification shall additionally perform a prohibited function.
5. Turbocharging/supercharging is not permitted.

6. Construction of tube frame cars is permitted. Standard maximum track dimensions for all cars, unless otherwise noted, are as follows:

GT-1	70.0" F & R
GT-2	64.0" F & R
GT-3 / GT-Lite	60.0" F & R

D. AUTHORIZED MODIFICATIONS (GT-1)

1. Engine (GT-1)

a. Component Modification

1. It is permitted to lighten, balance, or modify in shape, by any mechanical or chemical means, the standard, optional, or alternate components of the engine, provided it is always possible to positively identify them as such.
2. Material shall not be added to these components unless specifically authorized by these rules.
3. The original direction of engine rotation shall be retained.

b. Induction System

1. All inducted air shall pass through the throttle venturis.
2. The specified carburetor(s) or specified fuel injection may be modified. The number, model, type, throttle bore and/or venturi restriction shall remain as specified. Refer to Section E.1.a. of these rules for additional induction specifications.
3. Any air filter(s), velocity stack(s), and or air box(es) may be fitted. Air may be ducted to the carburetor or fuel injection provided that the ducting is completely contained within the engine compartment and that the air to be ducted is supplied through normal (or as specifically authorized herein) openings in the bodywork. Cars may duct air to the carburetor airbox through an opening in the back of the hood, rectangular in shape, maximum width of 20 inches, maximum length of 3.5 inches.
4. Intake manifolds are unrestricted.
5. Any throttle linkage may be used. All throttle linkages shall be equipped with more than one system of positive throttle closure

c. Fuel System

1. Any fuel line(s) may be used. All fuel line(s) passing through the driver/passenger compartment shall be made of metal braided hose with AN-Series threaded couplings.
2. Any fuel pump(s), filter(s), and pressure regulator(s) may be used. Such components may not be located in the driver/passenger compartment, but their location within the bodywork of the car is otherwise unrestricted.

d. Emission Equipment

1. Exhaust emission control equipment shall be removed in their entirety. When air injection nozzles are removed from a cylinder head, the resultant holes shall be completely plugged.

e. Cylinder Heads

1. The standard production, optional, or specified alternate(s) cylinder head(s) shall be used. Any valve guides and valve seats may be used.

2. Material(s) may be added to the combustion chamber(s) and interior ports/passages of the cylinder head(s). The addition of such material(s) shall not enable the combustion chamber and/or interior ports/passages to be moved external to the original physical limitations of the cylinder head(s).

3. V-6 and V-8 General Motors engines are permitted: Buick, Chevrolet, Oldsmobile, Pontiac, Brodix, Brownfield, Dart, Edlebrock, Pro Action 14-degree, or Airflow Research 210, 215, 220, and 227 cylinder heads of cast iron or aluminum. All Pro cylinder head, part # 270-LM-13 is permitted Any cylinder head(s) utilized shall be of a conventional design (siamesed intake ports, two (2) valves per cylinder, all valves inline), direct replacement type. General Motors SB-2 cylinder heads are permitted.

4. V-6 and V-8 Ford engines are permitted: Ford Motorsports inline-valve or canted-valve cylinder heads of cast iron or aluminum. Alternate cylinder heads from Airflow Research, Brodix, Cylinder Head Innovations, Dart, Edelbrock, Pro Action, and World Products. Any alternate cylinder head(s) utilized shall be of a conventional design (two valves per cylinder, all valves inline) direct replacement type.

5. V-6 and V-8 Chrysler engines are permitted: MOPAR Performance conventional design (siamesed intake ports, two (2) valves per cylinder, all valves inline), direct replacement cylinder heads.

f. Camshaft and Valve Gear

1. Any camshaft(s) mounted in the standard location(s) may be used. Any cam followers may be used. Springs and mounting hardware which act directly on the cam followers may be added.

2. Camshaft drive mechanism is unrestricted.

3. Push rods, rocker arms, and rocker arm supports are unrestricted.

4. Valves are unrestricted.

5. Valve springs, retainers, keepers, and seals are unrestricted.

g. Block

1. The standard production, manufacturer's heavy duty (of the same basic materials as the original block), or specified alternate engine block shall be used.

2. The block may be bored and/or sleeved to achieve the correct displacement.

3. The block may be machined, and O-rings may be added to replace or supplement the head gasket(s).

4. The crankshaft main bearing caps may be substituted. Additional main bearing caps and/or bolts may be used provided that no material is added to the block for their attachment.

h. Pistons and Rods

1. Pistons and piston pins are unrestricted. The compression ratio is unrestricted.

2. Connecting rods are unrestricted, provided that they are made of a ferrous material, e.g., steel. Aluminum, titanium, graphite, etc., rods are prohibited.

i. Crankshaft and Flywheel

1. The crankshaft is unrestricted, provided it is made of the same basic material as the standard production crankshaft. Those vehicles originally equipped with an iron crankshaft may use a steel crankshaft. All alternate crankshafts shall retain the same angle(s) of crank throws as the original crankshaft.

2. The use of any crankshaft vibration damper is permitted.

3. The use of any flywheel and clutch is permitted.

j. Oiling System

1. The use of any oil pan (sump), oil pump(s), and/or oil pickup(s) is permitted. Oil pump(s) shall be mechanically driven by the engine. Dry sump systems are permitted. Any oil tank(s) used by such a system shall be located within the bodywork, and any oil lines utilized within the system shall be metal or metal braided, equipped with AN-Series threaded couplers.

2. The use of any oil filter(s) is permitted.

3. The oil tank(s), cap(s), oil filter(s), and any fittings attached thereto shall be isolated by a metal bulkhead(s), so that in the event of any spillage, leakage, or failure, oil will not reach the driver.

k. Electrical System

1. The use of any driver operated electrical starter is permitted.

2. The use of any ignition system (except magneto ignition) is permitted, provided the number of spark plugs remains the same as that of the standard production, optional, or alternate cylinder head(s). Driver controlled adjustable spark timing is prohibited.

3. The remaining components of the engine electrical system are unrestricted.

l. Exhaust System

1. The components of the exhaust system are unrestricted. Refer to sections D.8.c.2., and D.8.j.3., of these rules for additional exhaust system and bodywork specifications.

m. Other Engine Components

1. Alternate engine components considered replacement parts, such as seals, bearings, water pumps, nuts, bolts, studs, washers, and gaskets are permitted. Bushings or offset keys of unrestricted origin may be installed.

2. Generator/alternator, crankshaft, and water pump pulleys are unrestricted.

3. Engine mountings are unrestricted.
   A. Cars with the engine mounted longitudinal to the chassis may relocate the engine in a longitudinal direc-

tion, centered along the longitudinal centerline of the vehicle as defined by the track. A one (1) inch transverse deviation tolerance from the absolute centerline is permitted. Unless otherwise so fitted in its standard production location or specifically authorized in the vehicle's GTCS specifications, said relocation shall align the center of the foremost spark plug hole with the front axle centerline.

B. Transverse mounted engines may be relocated for axle/CV joint alignment. Alternately, they may be relocated to a longitudinal position if authorized specifically by the GTCS.

C. General Motors, Ford, and Chrysler front mounted V-6 engines may be positioned so that the center of the foremost spark plug hole is no more than 4.5 inches behind the front axle center line (bellhousing and transmission locations are the same as a V-8 motor).

2. Engine, Rotary Piston (GT-1)

a. Component Modification

1. Rotary piston engines in GT-1 may be prepared using GTCS specifications D.1.a., b., c., d., j., k., l., and m.

2. The standard production or specified alternate rotor housings shall be used. No changes in the epitrochoidal curve of the motor are permitted.

3. The capacity of the working chamber(s) shall not be changed.

4. The eccentric shaft may be replaced with another of the same basic material, but no changes in its eccentricity or bearing journal dimensions are permitted.

5. The rotor(s) is/are unrestricted, provided the material and number of lobes remains unchanged.

3. Cooling System (GT-1)

a. Radiator

1. Only one radiator is allowed provided that there are no changes to the exterior bodywork to accommodate its use. It shall not be located in the driver/passenger compartment. Radiator overflow line (s) shall terminate in a catch tank.

2. Separate expansion or header tank(s) are permitted. Any such tanks shall not be located in the driver/ passenger compartment.

3. The heater core and all attendant heater controls, lines, and accessories may be removed in their entirety, but shall not be modified or replaced.

b. Radiator Fan

1. The cooling fan(s) may be modified, substituted, or removed.

2. Electrically operated cooling fan(s) may be installed, provided it/they serve no other purpose.

c. Radiator Shroud/Ducting

1. The original radiator shroud may be altered, removed, or

replaced.

2. Sealing or shrouding the airflow area between the normal grill opening and the water radiator is permitted.

d. Water Pump

1. The water pump(s) may be replaced with any other water pump(s) mechanically driven by the engine.

2. Mid-engine vehicles may use an electric water pump.

e. Thermostat

1. The thermostat(s) may be modified or replaced with blanking sleeves or restrictors.

f. Oil/Lubricant Coolers

1. The use of any engine, transmission, and differential cooler(s) is permitted, provided that it/they are mounted completely within or under the bodywork, but not in the driver/passenger compartment.

2. Associated cooler pumps and lines are permitted for the transmission and differential coolers.

3. Air may be ducted to said coolers only through normal openings in the bodywork. Air ducts or other openings shall be added to body parts only where specifically authorized by these rules.

4. Air may be ducted to the rear brakes and rear mounted coolers from an interior bulkhead behind the driver. Air may also be ducted to these components from free air under the car, provided that such under car ducting does not create "ground effects."

4. Transmission/Final Drive (GT-1)

a. Component Modification

1. It is permitted to lighten, balance, or modify in shape, by any mechanical or chemical means, the standard, optional, or alternate components of the transmission and final drive, provided that it is always possible to identify them as such.

b. Transmission

1. Automatic transmissions are not permitted unless specifically authorized on a vehicle's GTCS line.

2. Any readily available manual transmission having no more than five (5) forward speeds and an functional reverse speed may be used, provided that it is fitted in the same basic location used in the standard production automobile. Any relocation or repositioning of the transmission-to-engine dimensional relationship shall be specifically authorized by the GTCS. Sequential shifting transmissions are permitted with a 75 lb. weight penalty. Air, hydraulic or electric actuation of the gearshift mechanism is not allowed.

   A functional reverse is defined as "operable by the driver from his normal seated position and capable of sustained movement of the vehicle, under its own power, in a reverse direction." A driver-operated device for locking out reverse gear may be added provided it does not prevent prompt engagement of reverse in an emergency situation.

3. Front engine/transmission vehicles shall locate the front mounting surface of the transmission within sixteen (16) inches of the back of the engine block.

4. Any shift linkage may be used.

5. The linkage between the clutch pedal and the clutch housing/clutch actuating mechanism is unrestricted. A mechanical linkage may be replaced with a hydraulic system.

6. Transmission mountings are unrestricted.

c. Final Drive

1. Any axle tube, final drive housing, gear ratio, limited slip or locked differential may be used. Final drive units which permit ratio changes while the car is in motion are prohibited.

2. Heavy duty propeller shaft(s) and/or drive shaft(s) may be used. A minimum of two (2) steel 360 degree "loops" shall be installed of sufficient strength to prevent the driveshaft(s) from contacting the ground in the event of shaft and/or U-joint failure. Said loops shall be located within twelve (12) inches of the front of the shaft, and as close as practical to the rear universal joint.

5. Suspension (GT-1)

a. Ride Height

1. No part of the car to the rear of the front tire opening, including the exhaust, may touch the ground when two (2) tires on the same side of the vehicle are deflated.

b. Suspension Components

1. Suspension components may be reinforced, modified, or replaced with units of alternate design, and their mounting points may be relocated. The addition or substitution of anti roll bars, camber compensating devices, and/or suspension stabilizers is permitted. If these devices or any other suspension components extend into the driver/passenger compartment, they shall be completely sealed off from said compartment by metal panels.

2. Hubs, bearings, spindles, axles, U-joints, CV joints, bushings, ball joints, and rod ends may be freely modified or substituted.

3. The wheelbase of the automobile shall not be changed or relocated in the fore/aft direction. A tolerance of +/- 2.00 inches from published specification shall be permitted unless otherwise noted in the GTCS. Alternatively, any purpose built tube frame car can be built to a 102 inch wheel base to enable eligibility in both GT-1 and Transam events.

c. Springs/Shock Absorbers

1. Suspension springs may be replaced with others of unrestricted origin and type.

2. Shock absorbers are unrestricted, except that the number of shock absorbers fitted shall not be changed from that of the standard production automobile. No hydraulic or pneumatic interconnecting or cross linking of shocks is allowed.

3. Shock absorber mountings are unrestricted.

d. Suspension Control

1. The manufacturer's basic system of front suspension shall be retained, i.e., independent. Strut type front suspension may be replaced with a double A-arm type suspension.

2. The manufacturer's basic system of rear suspension may be retained, i.e., independent, live axle, etc.. All forms of independent rear suspension may be replaced with a closed tube beam, live axle suspension. Cars originally equipped with live axle rear suspension shall not replace said suspension with any type of independent suspension.

3. Automobiles originally manufactured as FWD vehicles may convert to RWD, but shall only use a closed tube beam, live axle rear suspension.

e. Steering

1. The front wheels only shall be steered by the driver.

2. The type of steering is unrestricted, provided that a collapsible type of steering column is used.

6. Brakes (GT-1)

a. Brake Components

1. The use of any dual master cylinder and/or pressure equalizing device is permitted. All cars shall be equipped with a dual braking system operated by a single control. In the case of leakage or failure to any point in the system, effective braking power shall be maintained to at least two (2) wheels.

2. Servo assist braking systems are unrestricted.

3. Backing plates or shields may be removed. Brake air ducts may be fitted, provided they extend only in a forward direction, and that no changes are made in the bodywork for their installation.

4. Parking brakes may be removed.

5. The brake lines shall be steel tubing, metal braided hose, or flexible brake hose. Lines may be relocated and given additional protection.

6. Brake discs, calipers, and/or drums are unrestricted, provided that the discs or drums are mounted in the same location (e.g., outboard vs. in-board) as the standard production automobile.

7. Water spray brake cooling systems are permitted. No water cooled calipers are permitted.

8. Carbon brake rotors are prohibited.

7. Wheels and Tires (GT-1)

a. Wheels

1. Wheels shall be made of steel, aluminum, magnesium, or a combination thereof. Multi-piece wheels shall utilize mechanical fasteners (bolts, rivets, etc.) for assembly.

2. Wheels may be thirteen (13), fourteen (14), fifteen (15), or sixteen (16) inches in diameter, but all four (4) wheels shall be of the same diameter.

3. Wheels shall have a maximum width of twelve (12) inches in the front and (13) inches in the rear.

4. Centerlock or quickchange wheels are permitted.

b. Tires

1. Tires are unrestricted, except that they must meet the requirements of GCR Section 9.3 Tires.

8. Body/Structure (GT-1)

a. The intent of these bodywork/configuration rules is to maintain the recognizable external features of the standard production automobile while providing for necessary safety and performance modifications.

1. Lightening of the bodywork is permitted, but the exterior shape of the body shall not be changed except where specifically authorized herein.

2. The method of bodywork attachment is unrestricted, and shall meet the requirements of the GCR. Section 9.3 Loss of Bodywork.

3. Maximum overall car width shall not exceed 80.65 inches. Existing cars built to 84.75 inches with a log book history of running in that configuration may continue to do so.

4. Trans Am approved bodywork and wheelbase specifications are allowed unless otherwise specifically prohibited by these rules. Trans Am bodywork shall be in a configuration that is approved for past or present Trans Am competition. If body panels do not have the official Trans Am bodywork approval decal, the competitor is allowed to present a receipt of purchase from the manufacturer or it's agent for verification. *No additional spoilers, splitters, air dams or other aerodynamic devices not incorporated in the original approved body may be run. No undertray may extend beyond the outline of the original Trans Am approved body.*

5. Convertible tops, sunroofs, and removable panels shall meet GCR Section 9.3 Detachable Panels/Sunroofs. As of 1/1/2002, all newly classified convertible models will be required to compete with a windshield and hardtop. Convertible models classified before 1/1/2002 will be allowed to compete without a windshield and/or top, regardless of log book issue date, unless specified differently on the vehicle specification line.

6. Two (2) hood louvers are allowed, they must be located on the hood/front fender between the radiator and the rearward edge of the hood, max. size of 20" x 10" with a minimum of five (5) slots.

b. Any bodywork components may be fabricated of alternate material(s), provided that their shape remains as specified herein, unless specifically prohibited elsewhere in these rules.

c. Fenders may be flared for tire clearance, provided that their shape and opening contour in horizontal projection is similar to the original opening.

1. Modified wheel opening(s) shall not confuse the identity of the car. The fender flares shall completely cover the

highest point of the tires, and may extend into the doors and bumpers.

2. Rear fenders may have holes or slots to accommodate exhaust outlets. These holes or slots shall be below a line seven (7) inches above the bottom of the rocker panel, and shall be no wider than seven (7) inches.

3. The inner fender panels separating the wheel wells from the engine compartment may be altered, replaced, or removed, provided that there are panels which provide total separation between the wheel wells and the driver/passenger compartment.

d. The hood and deck lid/trunk hinges and latches may be removed. The hood and deck lid/trunk may be "molded in" with other bodywork components to create "one-piece" front and rear ends. Misalignments or modifications to create ventilation openings where none previously existed are prohibited.

The hood may be modified for clearance of an airbox, provided that such alteration does not confuse the identity of the car.

e. Bumpers that are not an integral part of the bodywork may be removed, providing that all projecting hardware is also removed. Alternately, they may be replaced with replicas of alternate material(s). In those cases where bumpers are an integral part of the bodywork, they may be replaced with replicas of alternate material(s). Bumper bracket holes in the bodywork may be covered, provided such covering serves no other purpose.

f. The standard grille(s) or approved facsimile(s) shall be retained, except where covered by the front spoiler or intermediate spoiler mounting device.

g. The original angle of the windshield shall be maintained unless alternate components and/or specifications are specifically authorized in the GTCS.

h. All cars may use a standard safety glass windshield, mounted in the stock location and at the stock angle. In addition to any other method of retention, the windshield shall be secured within the specifications of GCR Section 9.3 Windshield Clips. Polycarbonate windshields such as Lexan are allowed. Alternate windshields must be of 6mm minimum thickness. Alternate material windshields must be identical in size and curvature to the original glass component. Alternate material windshields must have in addition, three (3) inner supports to prevent the windshield from collapsing inward. These supports must be 0.75" by .125" minimum straps of aluminum. Spacing between these inner supports must be eight (8) inches minimum. *In place of clips, polycarbonate windscreens may be mounted using a fastener spaced a minimum of every 12 inches across the top and sides, with a minimum of four across the bottom. Alternatively, the bottom may be captured in a channel.*

i. The rear quarter (side) and rear windows may be made of clear, transparent, and uncolored polycarbonate material having a minimum thickness of 3mm.

1. Ducts may be installed in the side windows or window openings for the purpose of supplying cooling air to the

driver and/or differential/transmission coolers. Air passing through the differential/transmission coolers may be exhausted through an opening identical in size and location to the rear license plate frame.

j. Doors

1. Driver and passenger door window glass or plastic shall be removed. Inside door handles, door panels, window cranks and mechanisms, and other interior trim pieces may be removed.

2. The doors shall be pinned or otherwise positively fastened to prevent their opening in the event of an accident. Standard door hinges and latches may be removed, but the doors shall remain capable of being opened or removed, unless the doors are integral to the remainder of the bodywork.

3. Doors may contain holes or slots to accommodate exhaust outlets. Any such openings in the door(s) shall be below a line ten (10) inches above the bottom of the rocker, and no wider than seven (7) inches. A maximum of two (2) such exhaust openings are permitted on the door.

k. Spoilers

1. *A front spoiler may be fitted. It shall not protrude beyond the overall outline of the car as viewed from above except for a front splitter that may extend up to two (2.0) inches. The additional splitter is allowed only on air dams not already incorporating a splitter that extends forward of the factory bumper. The spoiler shall not extend aft of the forward most part of the front fender opening (cutout), and shall not be mounted more than four (4) inches above the horizontal centerline of the front wheel hubs. Full-width bottom shrouding of the front spoiler/nosebox area (front undertray) is permitted but must be flat and can extend no farther rearward than the center of the engine harmonic balancer. Undertray may not be stepped or curved. Undertray may be angled in side view to produce a maximum height at the trailing edge of 3.25 inches above the ground.*

   Openings are permitted for the purpose of ducting air to the brakes, radiator, airbox and/or oil cooler(s); equal openings may be placed in the standard lower front panel directly behind openings placed in the spoiler. Joint separations need not be shown. The spoiler "pan" area forward of the leading edge of the front wheel openings shall be flat and follow, but not exceed, the line of the front fender/spoiler bottom. No components may protrude or extend below this plane.

2. The Club Racing specified rear wing or a flat plane rear spoiler may be used. If a flat plane rear spoiler is used, it shall be contiguous with the rear bodywork rearward of the rear window, and shall comply with the following:

   A. Height: No higher than eight (8) inches, measured from the bodywork along the face of the spoiler, from the point of attachment to the top of the spoiler. In the case of a spoiler with a curved top edge conforming to the shape of the bodywork (rearview), the measurement is to be made perpendicular to the tangent of

the body at the point of attachment. In the case of a spoiler mounted with a vertical mounting flange on the rear face of the bodywork, the measurement shall be made ignoring any slight amount of mounting flange exposed due to the curvature of the rear bodywork at the point of attachment.

B. Width and Overhang: No wider than the body, excluding fender flares, from the forward most point of the spoiler (or mounting flanges) rearward. It shall not extend rearwards of the rearmost extremity of the bodywork for the entire width of the car (when viewed vertically from above the car at any point, the spoiler shall not protrude beyond the bodywork).

C. Mounting: Spoilers shall be strong enough to be self supporting, and shall be mounted directly to the rear hatch, deck, or trunk lid. A mounting flange no greater than one and one-half (1-1/2) inches wide, contiguous with the bodywork (either forward facing on the top surface of the bodywork or downward facing on the rear surface of the bodywork) shall be employed. No other forward facing sheet metal supports are permitted. Supplemental bracing may be added in the form of two (2) rods (maximum diameter one-quarter inch), mounted at least ten (10) inches inboard from the ends of the spoiler. Small rear supports may be added.

D. Configuration: the spoiler shall be a single plane spoiler (a straight line in any vertical cross-section), uniform in height from the rear bodywork. There shall be no gaps or openings below the spoiler for its entire width. Only enough curvature (in a fore-and-aft direction as viewed from above) shall be permitted to facilitate mounting. The use of fences, end rails, Gurney lips, wickerbills, or other forward facing lips or aerodynamic devices is prohibited.

NOTE: O.E.M. rear spoilers are not permitted unless specifically listed on the vehicle's specification form.

E. A single element, single plane airfoil scaled to a chord length of 10.75 inches is permitted. The maximum cross-sectional tolerance of the wing profile is 0.060 inch. A maximum 0.50 inch Gurney tab is allowed at the trailing edge of the wing element. The tab must be mounted 90 degrees to the upper wing surface. No air may pass between the tab and the wing. The wing end plates must fit within a rectangle measuring 11.00 inches long by 4.00 inches tall. No portion of the wing element or tab may extend beyond the perimeter of the endplate. The endplates must be mounted parallel to the vehicle centerline, and must be perpendicular to the ground. Endplates must be flat, with no curvature or Gurney tabs. The maximum width of the entire wing assembly (wing element, endplates, Gurney tab, and mounting hardware) is 72.00 inches.

F. Wing mounting specs: The entire wing assembly must be mounted below the peak of the roof (measured at the highest point of the roof). Trailing edge of

wing assy. must be located within an area defined by a point; 6" forward of rearmost bodywork and the rearmost bodywork (measured at vehicle centerline). Two wing mounting posts must be used, with each one located between 16"-20" inboard from end of wing. The exposed portions of the wing posts shall not exceed 85 square inches each. Curved mounting brackets will be measured as if they're in a flat plane as viewed from the side. Mounting brackets are to be included in the measurement. Max. wing angle from horizontal is 30-degrees.

l. Glass/plastic headlights, front parking and signal lights, lenses, and bulbs shall be removed. Other front lighting parts and ancillaries may be removed. Headlight, front parking and signal light, and similar standard openings in the front of the car may be used for ducting air to the engine, front brakes, and/or coolers. Such ducting may pass through interior panels for these purposes.

   1. The cross sectional area of a single duct shall not exceed the cross sectional area for the original (single) headlight lens.

   2. It is not permitted to relocate the standard openings for headlights, parking lights, signal lights, etc.. The headlight openings shall be covered with a wire screen or a panel of an alternate material, provided that such covering does not confuse the identity of the car.

   3. The side marker light assemblies shall be removed, and the resultant openings shall be completely closed.

m. The windshield wiper system is unrestricted.

n. Floors

   1. Driver/Passenger Compartment: The floor of the driver/passenger compartment shall maintain the basic shape and position of the original floor, i.e., flat and horizontal, relative to the car and rocker panels. It may not be curved, angled, recessed, or channeled other than as specifically authorized by these rules, and shall be made of steel and/or aluminum only.

      A. On the passenger side of the driver/passenger compartment (only), the floor may be raised up to ten (10) inches, or a secondary floor installed at that level, to accommodate the installation of the exhaust system and mufflers. Such raising of the floor shall serve no other purpose.

      B. The driver/passenger compartment floor shall cover the area from the forward firewall the full width between the rocker panels, and shall extend no further aft than the forward most point of the rear wheel openings. The floor panels between the rocker panels and the outboard frame rails may be cut out or removed.

   2. For front engine cars – floor panels between the engine bay firewall and the forward most point of the front wheel openings are prohibited. For mid or rear engine cars – floor panels between the engine bay firewall and the rearward most point of the rear wheel opening are prohibited.

3. The fuel cell bottom and/or floor behind the rear wheel opening shall be flat, angled upwards, and shall follow, but not exceed, the line of the rear fender bottom.

9. Driver/Passenger Compartment - Trunk (GT-1)

a. Seating

1. All standard production seats and seat backs shall be removed. The driver's seat shall be replaced with a one-piece bucket-type race seat. Such seat shall be installed so that a second seat of the same dimensions could be simultaneously fitted to the passenger's side of the car (no center seating), or a beaded or poured formed seat with fore, aft and lateral support equivalent to that of a bucket-type seat. Such seat shall be installed on one side of the Chassis and driveline (no center seating).

b. Steering Wheel

1. Any steering wheel and wheel quick release mechanism complying with GCR Section 9.3 Steering Wheel Locks, may be used.

c. Gauges/Accessories/Driver Convenience

1. The replacement, addition, or removal of accessories (gauges, switches, indicators, etc.) is permitted. Such installations and/or modifications shall have no influence on the mechanical performance of the car. Similarly, they shall not include the substitution or replacement of any element of the bodywork or chassis except where specifically authorized by these rules.

2. Fresh-air ducts to the driver may be added to the A-pillar area. They shall be distinctly separate parts from the bodywork. Roof louvers (vents) are allowed for the express purpose of venting the driver's compartment. A maximum of 24 square inches of open area and a maximum number of twelve openings are allowed. Each opening shall be no larger than 4" x ½".

3. The use of any mirror(s) meeting the requirements of GCR Section 9.3 Mirrors, is permitted.

d. Interior Modifications - Firewall/Bulkheads

1. Modifications may be made to the driver/passenger compartment for the convenience of the driver and to permit the installation of required safety equipment. Such modifications shall have no influence on the mechanical performance of the car. Similarly, they shall not include the substitution or replacement of any element of the bodywork or chassis except where specifically authorized by these rules.

2. Floor mats, upholstery, and all interior trim shall be removed.

3. There shall be a firewall between the driver/passenger compartment and the engine compartment/ bay. It shall be made of steel and/or aluminum and shall be transversely positioned in the approximate location of the original.

   A. It shall extend, at minimum, from the left outboard frame rail to the right outboard frame rail, and at maximum from the left outer door skin to the right outer door skin.

B. It shall be designed, in conjunction with the floor and driver/passenger compartment interior panels and bulkheads, to prevent the passage of and isolate the driver from flame, fluids, and debris.

4. There shall be a steel and/or aluminum bulkhead completely separating the driver/passenger compartment from the compartment containing the fuel cell.

   A. The forward most element of this separation shall consist of a vertical transverse bulkhead behind the driver, extending the full width of the compartment from the floor to the top of the door.

   B. Behind this rear bulkhead there shall be a steel and/or aluminum horizontal bulkhead the full width of the interior of the car or between the inner fenders extending from the vertical bulkhead to the rear of the fuel cell.

   C. These two bulkheads shall, together, completely cover and isolate the rear suspension, coolers, ducting, etc. so that none of these items are visible when viewed from above. The fuel cell shall also be covered and isolated unless the car is equipped with the optional bulkhead listed below in Paragraph 5. *Oil tank tops may be visible.*

   D. All fuel filler, overflow, vent, discriminator, or return lines or components that extend beyond the limits of the vertical or horizontal bulkheads into the driver/passenger compartment shall be metal, metal braided line, or independently shielded with an additional steel and/or aluminum bulkhead.

5. An additional vertical, transverse bulkhead is permitted behind the driver. It shall be located above the mandatory vertical bulkhead and shall allow the driver adequate vision to the rear. It is recommended that this additional bulkhead be made of a clear, transparent polycarbonate material.

10. Safety (GT-1)

a. Steering Column/Locks

1. The steering column shall be a collapsible type, either by layout design or by column construction, and shall comply with GCR Section 9.3 Steering Wheel Locks.

b. Fuel Cell

1. No part of the fuel cell shall be closer to the ground than six (6) inches, unless contained within and above the lowest part of the basic structural frame rails of the vehicle and fully enclosed.

2. The fuel cell shall be located in approximately the same location as in the original vehicle, or may be relocated behind the rear axle. It shall not be located within the protected area of the driver/passenger compartment unless specifically authorized in the GTCS.

c. Brake Lights

1. Two (2) operating brake lights and two (2) operating tail lights are required at the rear of the car.

2. The original tail light and brake light lenses shall be retained, and shall be located in their original positions.

d. Hoses/Lines

1. All fuel, oil, and coolant lines (including those lines that perform fill, overflow, vent, return, etc., functions) which pass through the driver/passenger compartment shall be made of metal or metal braided hose, and shall be equipped with AN-Series threaded couplers.

2. For front engine cars, no oil or fuel line located to the rear of the transverse engine compartment firewall shall be located in a compartment or otherwise restricted area which also contains any component of the exhaust system.

E. APPROVED AUTOMOBILES/NOTES

1. Notes (GT-1)

a. Carburetors/Fuel Injection

1. Any modular 4bl carburetor may be used with a maximum of a one and eleven-sixteenths (1-11/16) inch throttle bore, unless alternate carburetion and/or dimensions are specified in the GTCS.

2. Unless otherwise specified or permitted by the GTCS, fuel injection is prohibited on GT-1 automobiles as of January 1, 1994.

3. Pushrod V-6 engines may run a single Holley Model 4500 carburetor, but the minimum weight shall be increased to that of the same displacement fuel injected car.

4. V-8 engine cars with engine displacements of greater than 366 cubic inches (6.0 liters) shall use a one and three-eighths (1-3/8) inch throttle bore restrictor plate, mounted beneath the carburetor, as specified in the diagram.

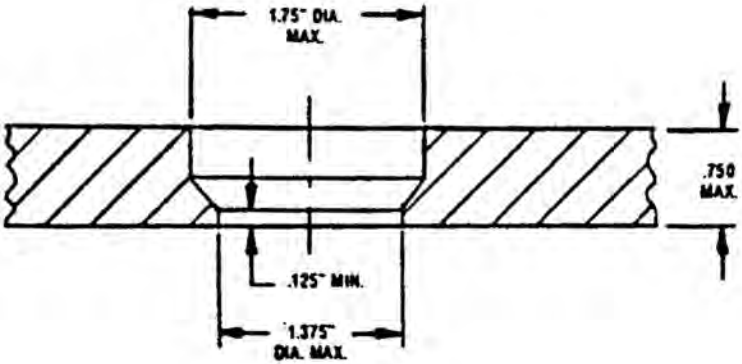

Required Restrictor Plate for GT Engines over 6.0 Liters (366CID).

Throttle Restrictor Plate Material: Aluminum, Thickness 0.75" Maximum.

1.375" Restrictor – Hole must be maintained for a depth of 0.125" Min.

Relief angles to clear Butterflies, Unrestricted.

5. Refer to Sections D.1.b. and c. of these rules for additional induction system specifications.

b. Weight

1. The weight chart is applicable to all cars unless alternate weight(s) is/are specified in the GTCS.

WEIGHT CHART FOR GT-1

Type - cubic inches (liters)	**= Carb**
V-6 - up to 275 (4.5)	= *2345*
V-8 - up to 311 (5.1)	= *2585*
V-8 - 312 (5.1) to 335 (5.5)	= *2685*
V-8 - 336 (5.5) to 366 (6.0)	= *2780*
V-8 - over 366 (6.0) *	= *3070*

*With restrictor to 1-3/8" throttle bores per restrictor plate diagram.

Weight in pounds with driver

Note: Ford engines without inline valves (meaning the valves are splayed or canted) shall add 60 lbs.

Note: GM engines using the SB-2 head shall add 60 lbs.

2. All cars using a production based transmission *with syncros* and having no more than four (4) forward speeds and a working reverse speed may reduce the listed weight by fifty (50) pounds.

   Note: A production based manual transmission is defined as a unit that retains original type gears (i.e., no straight cut, dog ring type gears). It shall be located in the same basic position as used in the production automobile, retaining the standard bellhousing dimensions, and may use any shift linkage.

3. All cars competing on ten (10) inch wide rims may reduce the listed weight by fifty (50) pounds.

c. Approved Automobile List (GT-1)

Make/Model	**Wheelbase**
American Motors Corporation	
Concord	108.0"
Javelin	109.0"
Spirit	96.0"
Chrysler Corporation	
Chrysler Laser X/T	97.0"
Dodge Daytona	97.0"
Dodge Avenger	106.0"
Dodge Viper GTS	96.2"

Note: Viper shall use a class legal Dodge engine.

Dodge Viper Competition Coupe
8.3L sealed engine (4.03" x 3.96"), Comp. ratio: 9.6:1, Trans ratios: 2.66, 1.78, 1.30, 1.00, 0.74, 0.50, Wheelbase: 98.8", Track (F&R): 62.8" / 63.3", Wheels (F&R): 18x11 / 18x13, Tire size (F&R): 305/30 / 335/30, Weight: *3065* lbs. Cars must remain in the original configuration, factory optional equipment is not allowed.

Ford Motor Company - Ford	
Falcon	105.0"

Fusion (bodywork)	106.0″
Mustang (1965-68)	108.6″
Mustang (1969-70)	108.0″
Mustang (1979-93)	100.5″
Mustang (1994-1998)	100.5″
Mustang (1999-2004)	100.5″
Mustang (bodywork) (05-10)	106.0/110.0″

Roof height 46.5″ min. (measured from the ground). Air may be ducted to the carburetor airbox through an opening in the back of the hood, rectangular in shape, maximum width of 20″, maximum length 3.5″. Opening may extend 1″ into the windshield.

Probe V-6 or V-8	99.0″
Thunderbird (1983-89)	104.0″
Thunderbird (1990-)	105.0″
Taurus (2 door) (98-)	110.0″

Ford Motor Company - Lincoln/Mercury

Capri (1979-86)	100.5″

General Motors Corporation - Buick

Regal	108.1″
Somerset	108.1″

General Motors Corporation - Chevrolet

Beretta	103.4″

Only a beam-type, live-axle rear suspension is permitted.

Camaro (1967-69) *	108.0″
Camaro (1970-81) *	108.0″
Camaro (1982-92) V-6 or V-8*	101.0″
Camaro (1993-) V-6 or V-8*	102.0″
Camaro (2010-) V-6 or V-8*	108.0″/112.0″
Corvette (1963-67) *	98.0″
Corvette (1968-77) *	98.0″
Corvette (1978-82) *	98.0″
Corvette (1984 -96) V-6 or V-8*	96.2″
Corvette (1997) V-8	104.5″

* Alternate transmissions: THM350 based or THM400 based 3 speed.

Corvette C6 (bodywork only) (05-) **	102.0″

** The front undertray and rear fascia and diffuser included in the ACP kit must be replaced with bodywork compliant with the GT1 rules.

Lumina (1990-)	106.0″
Monte Carlo (95-00)	*103.0″*/106.0″
Monte Carlo (01-02)	*103.0″*/110.0″
Monza	97.0″

Air may be ducted to the carburetor airbox through an opening in the back of the hood, rectangular in shape, maximum width of 20″, maximum length 3.5″. Opening may extend 1″ into the windshield.

LS1 V8 engine allowed with stock plastic intake manifold @ *2585* lbs.

General Motors Corporation - Oldsmobile

Cutlass Ciera (1987-)	105.0″
Cutlass (1988-)	104.0″
Toronado (1987-)	105.0″
Aurora (2dr.)	106.0″

Air may be ducted to the carburetor airbox through an opening in the back of the hood, rectangular in shape, maximum width of 20″, maximum length 3.5″. Opening may extend 1″ into the windshield.

General Motors Corporation - Pontiac

Fiero 94.0″
3300cc (4-cyl.), multi-carb and fuel injected weight = *1765* lbs.
3100cc (GM V-6) multi-carb and fuel injected weight = *1765* lbs.
4500cc Chevrolet 90 deg V-6 weight = *2345* lbs.
V-6 engine may be repositioned longitudinally in the engine bay along vehicle centerline. GM V-6 bow tie block #10051141 may be used.
Mid engine configuration – may place fuel cell within the protected area of the driver/passenger compartment provided that it meets all constraints of GCR section 9.3 Fuel Cell Specifications.
Transverse V-6 may deduct fifty (50) lbs.

Firebird/Trans-Am (1969)*	108.0″
Firebird/Trans-Am (1970-81)*	108.0″
Firebird/Trans-Am (1982-1992)*	101.0″
Firebird/Trans-Am (1993-)*	102.0″
Grand Prix	106.0″
GTO	102″/110″

*Alternate transmissions: THM350 based or THM400 based 3 speed. Air may be ducted to the carburetor airbox through an opening in the back of the hood, rectangular in shape, maximum width of 20″, maximum length 3.5″. Opening may extend 1″ into the windshield.

LS1 V8 engine allowed with stock plastic intake manifold @ *2585* lbs.

Jaguar
XK8 / XKR 100.5″
Note: shall use a class legal Ford engine.

Mazda
RX-7 95.2″/95.7″
RX-8 102″
12A engine, multi-carb or fuel inj. weight = *1710* lbs.
13B engine, multi carb or fuel inj. weight = *1710* lbs.
20B engine, multi carb or fuel inj. weight = *2025* lbs.

Nissan
300ZX/Z31 101.2″
3000cc V-6 engine, multi-carbs weight = *1815* lbs.
300ZX/Z32 (1990-) 101.2″
VG30D V-6 engine, (3) 48mm IDF with 40mm venturis weight = *1860* lbs. Permitted alternate hood: P/N 99996-Z32HP

Porsche
911 89.4″
3800cc 6, multi-carb or fuel injection weight, twin-plug head, dual ignition distributor weight = *1815* lbs. Factory spoiler P/N 930-512-023-00 & 930-512-021-00 (or kit# 930-512-901-01). Entire assembly only (with rubber lip). No alternate materials, no reproductions.

911 Cup 3.8 RSR
with the following additional specifications: Wheels: (F) 18 x 12, (R) 18 x 13, Allow FIA GT-2 front bumper cover, Allow FIA GT-2 “banana” rear spoiler, Transmission: 6 speed, Type G50/30, Weight: *2230* lbs (w / driver). Original, factory-installed Matter roll cage structures permitted.

Boxster 89.4″
alternate engine: 3.8 liter air-cooled, multi-carb or fuel injection, twin-plug head, dual ignition distributor. weight =*1815* lbs. Shall have windshield and hardtop installed by 1/1/2003.

GT3 R/RS (00-02)

3600cc, Wheels: (F) 18 x 10", (R) 18 x 11", Allow FIA GT-2 front bumper cover, Allow FIA GT-2 "banana" rear spoiler, Transmission: 6 speed Type G50/30, Original, factory-installed Matter roll cage structures permitted, weight *2340* lbs. May use fuel per the IT specs of GCR section 9.3 Fuel.

997 GT3 Cup
Shall run as delivered for the GT3 Cup Challenge except that tires are unrestricted and fuel per IT specs. Cars shall meet the safety requirements as specified in the GCR except that original, factory installed roll cage is permitted. Competitors shall have a copy of the Cup Challenge rules in their possession. Minimum weight *2710* lbs w/ driver. *Alternatively, may run in conformance with the Grand-Am specification. Competitors shall have a copy of the Grand-Am rules in their possession. Minimum weight 2710 lbs with driver.*

Panoz
Esperanté 106.0"
Note: Shall use a class legal Ford engine.

Qvale
Mangusta 104.0"
Note: Shall use a class legal Ford engine.

Shelby
Cobra 90.0"

F. GT-2, 3, LITE PREPARATION RULES

F.1. GT Cars registered as GT cars prior to January 1, 1990.
All GT cars registered as GT cars prior to January 1, 1990 shall use the manufacturer's original engine location, i.e., front, mid, rear; drive location, i.e., front or rear, and type of front and rear suspension, i.e., MacPherson strut, double A-arm, live axle, semi trailing arm, etc., unless authorized by the GTCS for a specific make and model.

Front-engined GT cars registered as GT cars prior to January 1, 1990 may be converted to Section F.2., specifications, but shall meet ALL specifications of Section F.2.

F.2. GT cars registered as GT cars after January 1, 1990.
All front engined GT cars registered as GT cars after January 1, 1990 shall utilize McPherson strut or double A-arm front suspension. A-arm front suspensions shall have the shocks attached to the outboard end of an upper or lower control arm. Rocker arms, push-pull rods, etc., are prohibited. Front wheel drive cars may convert to rear wheel drive. Cars classified in GT2-Lite that retain the original front wheel drive (FWD) configuration may retain the original type of rear suspension with no weight penalty or use a beam axle.

Cars classified in GT2-Lite running front engine, rear wheel drive (RWD) may use independent rear suspension (IRS), by choice at a weight increase equal to 2.5% of the car's specified weight.

All GT cars registered as GT cars after January 1, 1990 or updated to Section F.2.. specifications shall utilize left side driver placement.

F.3. Safety Equipment required on all cars.
a. Bulkheads
1. A metal bulkhead shall separate the driver/front passenger

compartment from the compartment containing the fuel cell. The fuel cell, cap, filler neck, and all fittings shall be isolated so that in case of spillage, leakage, or failure, fuel will not reach the driver. The bulkhead separating the driver/passenger compartment from the fuel cell shall not be above the bottom of the rear window and the bottom of the side/quarter windows. An additional vertical, transverse bulkhead is permitted behind the driver. It shall be located above the mandatory vertical bulkhead and shall allow the driver adequate vision to the rear. It is recommended that this additional bulkhead be made of a clear, transparent polycarbonate material.

b. Fuel Cells

A safety fuel cell complying with GCR Section 9.3 Fuel Cell Specifications, shall be installed. All fuel cell vents shall incorporate check valves to prevent fuel spillage. Dry-break refueling couplings and discriminator valves may be installed, provided they do not extend beyond the bodywork.

c. Windows

1. Windshield safety clips and rear window safety straps shall be installed on all closed cars. Three (3) clips (3 inch x 1 inch x 1/8 inch) shall be bolted or riveted to the body at the top of the windshield. Two (2) clips (3 inch x 1 inch x 1/8 inch) shall be bolted or riveted to the cowl and extend over the bottom edge of the windshield. Clips shall be spaced a minimum of twelve (12) inches apart. The rear window shall be secured with two (2) metal straps (1 inch wide x 1/8 inch thick) bolted or riveted to the body at the top and bottom of the rear window. Polycarbonate windshields such as Lexan are allowed. Alternate windshields must be of 6mm minimum thickness. Alternate material windshields must be identical in size and curvature to the original glass component. Alternate material windshields must have in addition, three (3) inner supports to prevent the windshield from collapsing inward. These supports must be 0.75" by .125" minimum straps of aluminum. Spacing between these inner supports must be six (6) inches minimum. In place of clips, polycarbonate windscreens may be mounted using a fastener spaced a minimum of every 12 inches across the top and sides, with a minimum of four across the bottom. Alternatively, the bottom may be captured in a channel.

3. Windshield - Open Cars: The windshield and all side and rear glass on open cars shall be completely removed, including all mounting brackets and fixtures, and a suitable windscreen installed.

   Said windscreen shall be made of a transparent material and shall not exceed the height or width of the original windshield/screen. The replacement windscreen shall be fitted within the vertical planes of the frontmost and rearmost elements of the original windshield/screen.

4. Ducts may be installed in the side windows or window openings for the purpose of supplying cooling air to the driver and/or differential/transmission coolers and/or the rear brakes. Air passing through the differential/transmission coolers may be exhausted through an opening identical in size and location to the rear license plate frame.

F.4. Authorized Modifications

The following modifications are authorized on all GT-2, 3, and Lite cars.

Modifications shall not be made unless specifically authorized herein. No permitted component/modification shall additionally perform a prohibited function.

a. General

1. It is not permitted to make any changes, alterations, or modifications to any component produced by the manufacturer, unless specifically authorized by these rules, or required by the GCR.

2. Any springs (including torsion bars) may be replaced by others of unrestricted origin, unless specifically prohibited by these rules.

3. Where alternate suspension and/or drive train equipment is authorized, modifications to the car/chassis are permitted to install authorized equipment, provided the modifications serve no other purpose.

4. All component parts of the bodywork, such as hood, doors, fenders, deck lid, rocker panels, windshield surround, roof, etc., may be lightened or replaced by ones of alternate materials, provided the shape, size, and relative position is identical to the original or approved alternate. The original size, angle, and relative position of the windshield shall be maintained. Convertible tops, sunroofs, and removable panels shall meet GCR Section 9.3 Detachable Panels/Sunroofs.

   Vents may be added to the roof panel or rear window for the express purpose of venting the driver's compartment. There may be no more than 12 openings with a total area of not more than 24 square inches.

5. Spare wheel and tire shall be removed.

6. Glass and/or plastic headlights, front parking lights, front signal lights, lenses, and bulbs shall be removed. Headlight openings shall be covered with a wire mesh screen or panel having the same contour as the original lens, mounted so that the headlight bezel/rim remains in place, maintaining the standard appearance of the Production automobile. Side marker light assemblies shall be removed and the resulting openings covered with a plate whose dimensions do not exceed those of the original parts; side marker lights that are an integral part of the taillight assembly cannot be removed. Other lighting parts and operating mechanisms may be removed. In the case of pop-up headlights, the entire assembly may be removed and the opening covered with a screen or plate (as above, without the headlight bezel/rim requirement) which provides a stock appearance. It is not permitted to relocate the standard headlight, parking light, signal light, etc., openings. Taillights shall be in the original location and shall be the original style/type of taillight for the make, model, and year of car.

   Ducts from headlights, front parking lights, and front signal lights in the front of the car may be used for ducting air to the engine, front brakes, and/or oil cooler(s). These ducts may pass through interior panels for this purpose. The cross section area of a single duct shall not exceed the cross sectional area of the original (single) headlight.

b. Chassis and Bodywork

The purpose of the following rules is to maintain recognizable external

features of the manufacturer's make and model, while providing necessary safety and performance modifications.

Restrictions regarding external body shape and use of belly pans are aimed at preventing attempts to obtain ground effect or streamlining. Provisions in the rules permit one-off chassis and frames, to reduce the cost of building and repairing GT cars, not to permit high technology (streamlining and/or ground effects). Semi-monocoque or monocoque construction is prohibited.

1. The external shape of the body cannot be changed, except when specifically authorized. Standard grills, window openings, or approved facsimiles shall be retained. All external trim and model identification may be removed. Misalignment or modifications to create ventilation where none previously existed are prohibited. One piece front and one piece rear bodywork is allowed. Rocker panels and doors may be parted and/or integrated with associated body panels. Rocker panels of an alternate material may be a flat vertical panel having the same dimensions as the original component when viewed from the side. Overall width of the vehicle/rocker panel measured at the door sill must remain stock. Roof/A-pillars shall be separate pieces. The cowl trim panel may be modified or removed.

2. Chassis, frame, or subframe may be lightened, reinforced, or replaced, provided components and attachments are not relocated, except where specifically permitted. Reinforcing does not authorize the use of belly pans forward of the firewall, or aft of the front edge of the rear wheel opening. The floor behind the rear wheel opening shall be flat and follow, but not exceed, the line of the rear fender bottom. Only the fuel cell container may protrude or extend below this plane.

3. No part of the bodywork or chassis, to the rear of the front wheel opening, shall touch the ground when both tires on the same side of the car are deflated.

4. The firewall and floor may be replaced with aluminum alloy or steel. Firewalls may be modified or notched.

5. Bumpers may be removed providing all projecting hardware is removed except when it (they) are an integral part of the bodywork, in which case it (they) may be replaced with replica(s) of different material. Non-integral bumpers may be replaced with a replica of alternate material or removed. Bumper bracket holes in the bodywork may be covered provided such covering serves no other purpose.

6. All standard production seats and seat backs shall be removed. The driver's seat shall be replaced with a one-piece bucket-type race seat. Such seat shall be installed so that a second seat of the same dimensions could be simultaneously fitted to the passenger's side of the car (no center seating).

7. Doors shall be pinned or otherwise positively fastened to prevent their opening in case of an accident. Standard door hinges and latch mechanisms may be removed, but the doors shall be capable of being opened or removed unless integrated into the bodywork. Interior door panels may be removed and the door window slots may be covered. Pins or straps may be added to hood and deck lid to supplement or replace the latches. Hood and deck lid hinges may be removed.

8. All driver and front passenger door window glass shall be removed. Window cranks and mechanisms may be removed. Rear quarter, rear side, and rear windows may be of transparent (clear) polycarbonate material, minimum thickness 3mm, but shall remain in the same position in the frame or opening as the original glass it replaces; rubber molding optional. Rear windows/hatchbacks and deck lids shall be completely closed. No bumper blocks or other means of poor alignment of bodywork will be permitted. Rear quarter (side) windows may be run in their original open or closed position.

9. Fenders may be flared for tire clearance, provided their shape and opening contour, in the horizontal projection, is similar and proportional to the original opening. Rear doors on 4-door automobiles may be considered part of the fender for purposes of fender flaring. The tire shall not extend beyond the fender openings at the highest point of the tire. The rear fender flares on GT-2 cars may extend forward into the door, no more than 26 inches from the rear axle centerline (GT-2 only). Wheel opening location may be altered in accordance with the allowable wheelbase tolerance in order to maintain vehicle's stock appearance. Ventilation openings, other than those which are standard production on the recognized model, are prohibited.

10. Front and rear inner fender panels may be altered, replaced, or removed provided there are panels providing total separation between driver compartment and wheel wells.

11. Replacement, addition, or removal of accessories (gauges, switches, indicators, etc.), or other interior modifications for driver convenience, or to permit installation of required safety equipment, is authorized provided such modifications have no influence whatever on the mechanical performance of the car. Such modifications do not include the substitution or replacement of any bodywork or chassis component except those specifically authorized by these rules. Floor mats and all interior trim shall be removed.

12. A spoiler may be fitted to the front of the car. It shall not protrude beyond the overall outline of the car as viewed from above except as follows:

    - GT2: a front splitter may extend up to 3 inches.
    - GT3: a front splitter may extend up to 2 inches.
    - GTLite: a front splitter may extend up to 2 inches.

    In all classes, the spoiler shall not extend aft of the forward most part of the front fender opening (cutout), and shall not be mounted more than four (4) inches above the horizontal centerline of the front wheel hubs. The spoiler shall not cover the normal grill opening at the front of the car. An intermediate mounting device may be used on cars whose front bodywork is above the four (4) inch minimum. Openings are permitted for the purpose of ducting air to the brakes, radiator, airbox and/or oil cooler(s); equal openings may be placed in the standard lower front panel directly behind openings placed in the spoiler. When bumpers are retained, the spoiler and bumper shall appear to be two separate parts. The spoiler "pan" area forward of the leading edge of the front wheel openings shall be flat and follow,

but not exceed, the line of the front fender/spoiler bottom.

13. A spolier or a Club Racing specified rear wing for GT2 and GT3 may be fitted to the rear of the car. Note: OEM rear spoilers and wings are not permitted unless specifically listed on the vehicle's specification line. If a spoiler is used, it shall be contiguous with the bodywork and shall comply with the following:

    A. Height (max): six (6.0) inches (GT-2 & 3) or five (5.0) inches (GT-Lite) measured from the bodywork along the face of the spoiler from the point of attachment to the top of the spoiler. In the case of a spoiler with a curved top edge conforming to the shape of the bodywork (rear-view), the measurement is to be made perpendicular to the tangent of the body at the point of attachment. In the case of a spoiler mounted with a vertical mounting flange on the bodywork, the measurement shall be made ignoring any slight amount of mounting flanges (see below) exposed due to the curvature of the rear bodywork at the point of attachment.

    B. Width and Overhang: If roof mounted, no wider than the roof at its mounting point when viewed from above the car. Mounting to be no further rearward than the forward most part of the rear window. If rear mounted, no wider than the body, excluding fender flares, from the forward most part of the spoiler (or mounting flange) rearward. Shall not extend rearwards of the rearmost extremity of the bodywork for the entire width of the car (when viewed vertically from above the car at any point, the spoiler shall not protrude beyond the bodywork).

    C. Mounting: Spoilers shall be strong enough to be self-supporting. A mounting flange no greater than one and one-half (1-1/2) inches wide, contiguous with the bodywork, (either forward facing on the top surface of the bodywork or downward facing on the rear surface of the bodywork) shall be employed. Supplemental forward bracing may be added in the form of two (2) rods, mounted at least ten (10) inches inboard from the ends of the spoiler. Rear supports may be added.

    D. Configuration: The spoiler shall be a single plane spoiler (a straight line in any vertical cross section) uniform in height from the bodywork with no more than 1/8" gaps/openings below the spoiler to facilitate imperfect mounting. The gaps/ openings are to be included in the overall height of the spoiler. Only enough curvature (in a fore and aft direction as viewed from above) shall be permitted to facilitate mounting. The use of fences, end rails, Gurney flaps, wickerbills, or other forward facing lips or aerodynamic devices is prohibited.

    NOTE: O.E.M. rear spoilers are not permitted unless specifically listed on the vehicle's specification form.

    If a Club Racing specified wing is used (GT2 and GT3 only), it shall comply with the following:

    E. A single element, single plane airfoil scaled to a chord length of 10.75 inches.

- A maximum 0.50 inch Gurney tab is allowed at the trailing edge of the wing element. The tab must be mounted 90 degrees to the upper wing surface. No air may pass between the tab and the wing.
- The wing end plates must fit within a rectangle measuring 11.00 inches long by 4.00 inches tall. No portion of the wing element or tab may extend beyond the perimeter of the endplate. The endplates must be mounted parallel to the vehicle centerline, and must be perpendicular to the ground. Endplates must be flat, with no curvature or Gurney tabs.
- GT2: The maximum width of the entire wing assembly (wing element, endplates, Gurney tab, and mounting hardware) is 68.00 inches, but no wider than the rear body width including fender flares.
- GT3: The maximum width of the entire wing assembly (wing element, endplates, Gurney tab, and mounting hardware) is 64.00 inches, but no wider than the rear body width including fender flares.

F. Wing mounting

- - GT2 *and GT3*: The entire wing assembly must be mounted below the highest point of the roof or roll cage main hoop whichever is higher measured at the highest point.
- GT2 and GT3: The trailing edge of the wing assembly must be located within an area defined by a point; 6” forward of rearmost bodywork and the rearmost bodywork measured at vehicle centerline.
- Two wing mounting posts must be used, with each one located between 8”-20” inboard from end of wing. The exposed portion of the wing mounting posts shall not exceed 85 square inches each. Curved brackets will be measured as if they’re in a flat plane as viewed from the side. Mounting brackets are to be included in measurement.
- The maximum wing angle from horizontal is 30-degrees.

14. GTL Wing Rules

A. The maximum width of the entire single element, flat plane wing assembly is 56.0 inches, but it may be no wider than the bodywork including fender flairs. The maximum chord is 8.0 inches. Wing endplates must fit within a rectangle measuring 8.5 inches wide by 3.0 inches high. Endplates must be flat, with no curvature or Gurney tabs. A maximum 0.5-inch wicker-bill may be employed.

B. The wing shall be mounted to the trunk/deck lid with two brackets. Each mounting bracket shall attach to the wing at least 2.0 inches inboard of the endplates. The brackets may protrude through the trunk/deck lid to allow the brackets to be fastened together beneath the lid.

C. The *entire* wing *assembly* shall be mounted 6.0 inches below the highest point of the roof or roll cage main hoop whichever is higher measured at the highest point.

D. The trailing edge of the wing assembly must be located between 6.0 inches forward of the rearmost bodywork and the rearmost bodywork as measured along the vehicle longitudinal centerline.

E. Cars with a *wagonback/notchback/hatchback* style body must have the entire wing positioned between 6.0 and 28.0 inches of the rearmost bodywork as measured along the vehicle longitudinal centerline, and a maximum of 4.0 inches above the highest point of the roof. *For this subsection, a wagonback/notchback/hatchback* style body (or variations of these) is a car in which the rear edge of the roofline is no more than 28.0 inches forward of the rearmost bodywork as measured along the vehicle longitudinal centerline.

15. GTLite front splitter: A front splitter may be added that is a flat single-plane. The splitter shall be mounted flat. The splitter must not extend laterally any further than the widest point of the front fenders. The splitter must have no vertical deviations. Additionally, a maximum of four (4) rods or cables may be used to support the front, and/or the sides of the splitter. A single-plane vertical close-out panel may be used to bridge any gaps between the front fascia and splitter.

c. Suspension and Wheels

1. Wheelbase will be homologated on a case by case basis as requested by the manufacturer. Wheelbase may be changed from -3″ to +1″ from printed stock dimensions in a fore/aft direction.

2. Suspension components may be reinforced, modified, or replaced as long as the type of suspension is not changed from that authorized in this GTCS.

3. Suspension mounting points, including suspension springs, may be relocated.

4. Suspension springs may be replaced with others of unrestricted origin.

5. Modifications or substitution of hubs, bearing, spindles, axle shafts, universal B joints, flex joints, and CV joints is permitted.

6. Addition or substitution of antiroll bars, camber compensating devices, and/or suspension stabilizers is permitted. If these devices extend into the driver/passenger compartment, they shall be completely sealed off by metal panels.

7. Suspension bushings and joints may be replaced by others of different material and/or design. Offset bushings and spherical bearings are permitted, including adjustable type.

8. Steering arms, pitman arms, and steering linkage component parts may be modified, reinforced, or substituted. The steering system may be changed and/or relocated.

9. The steering wheel may be replaced and rake of the steering column may be altered. A collapsible type of steering column equivalent to Federal Motor Vehicle Safety Standard No. 204 is required in all cars registered after January 1, 1983 and

highly recommended for prior registered cars. GT cars registered after January 1, 1990 or GT cars converted to Section F.2., specifications shall have left side driver placement.

10. Substitute wheels of any type may be used. All four (4) wheels shall be of the same diameter except in GT2. GT2 cars may run any tire/wheel combination provided that the tire does not exceed a maximum cross section width of 12.0" in the front and 13.75" in the rear. GT2 cars using 15 x 7" wheels exclusively may reduce the listed weight by 50 lbs. The maximum wheel size for GT3 cars is 15 x 7" and for GTL cars is 13 x 7" unless alternates are listed on the vehicle specification line. Alternatively, any wheel up to 15 x 7" may be used in GTL with a weight penalty equal to four percent of the car's weight as listed on the spec line. The minimum vehicle weight shall be rounded to the nearest pound.

11. Shock absorbers: It is not permitted to alter the number of shock absorbers. The make of shock absorber and its points of attachment may be moved. Shock absorbers may have load bearing capacity; e.g., gas filled or coil over. When using load bearing shocks, the original springs may be removed. GT cars registered after January 1, 1990 or GT cars converted to Section F.2., specifications shall have the shock absorber attached to the outboard end of an upper or lower control arm. Rocker arms, push-pull rods, etc., are prohibited.

d. Electrical Systems

1. The electrical/electronic system may be modified or replaced provided an operating starter motor and two (2) brake lights are retained.

2. Any distributor or transistorized ignition system (including crank triggered), firing the same number of spark plugs as the original distributor, may be used.

3. Magneto ignition is prohibited unless listed in the GTCS. Ignition wiring and spark plugs are unrestricted.

e. Engine and Drive Train/General

1. Exhaust manifold(s), header(s), tailpipe(s), and muffler(s) may be of unrestricted origin. The exhaust pipe(s) and/or muffler(s) may be recessed into the floor panel and rocker panel. The exhaust may be recessed into the bottom of the door or rear fender below a line seven (7) inches above the bottom of the rocker. There maybe a maximum of two (2) such areas in the door or fender, with the maximum length for each no more than seven (7) inches. Note that the exhaust outlet shall still be mounted as low as possible; this does not authorize exhaust outlets through the door. Exhaust opening(s) shall exit to the rear of the wheelbase centerline and away from the body.

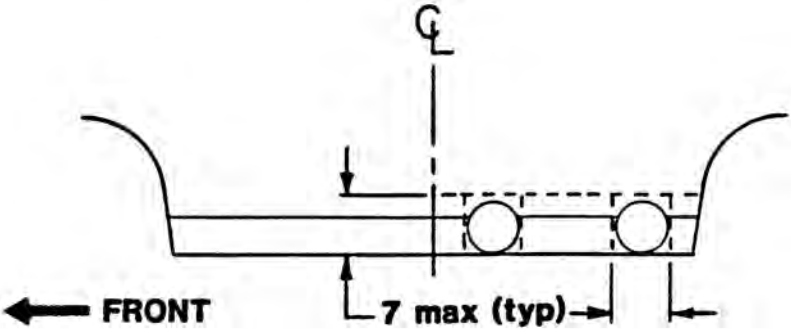

180 degree headers: The passenger's side floor pan may be raised not more than ten (10) inches to accommodate the installation of the exhaust system and muffler(s) provided such raising of the floor serves no other purpose. Exhaust may pass through the rear bodywork no higher than the rear axle centerline.

2. Exhaust emission control air pumps, associated lines and nozzles, and EGR devices cannot be modified in any way except that they may be completely removed. When air nozzles are removed from the cylinder head, the holes shall be completely plugged.

3. Substitution or modification of the clutch and/or flywheel is permitted.

4. It is permitted to lighten, balance, or modify in shape, by tooling, the standard or optional components of the engine and drive train, provided it is always possible to identify them as such. Material shall not be added to these components unless specifically authorized by these rules.

5. Alternate engine and drive train components considered replacement parts, such as seals, bearings, valve guides, pushrods, water pump *(including electric)*, timing chains/belts and sprockets, nuts, bolts, studs, washers, and gaskets are permitted. Bushings or offset keys of unrestricted origin may be installed.

6. The substitution of valve spring retainers and keepers is permitted. Valve springs are unrestricted (including number) provided the type and location remain unchanged.

7. Generator (alternator), crankshaft, and water pump pulleys may be altered or replaced with others of unrestricted origin. Any crankshaft vibration dampener is allowed.

8. Any oil pan (sump), oil pump(s), and/or pickups are allowed. Oil pump(s) shall be driven mechanically by the engine. Dry sump systems are permitted. The oil tank shall be located within the bodywork. The oil tank, cap, and all fittings shall be isolated so that in case of spillage, leakage, or failure, oil will not reach the driver. Any oil filter(s) may be used.

9. Installation of any vent or breather on the engine, transmission, or differential is permitted (See "Oil Catch Tanks"). Crankcase vacuum devices are prohibited.

10. Any readily available manual transmission having no more than

six (6) forward speeds in GT2 and five (5) forward speeds in GT3 and Lite and a functional reverse speed may be used, provided that it is fitted in the same basic location used in the standard production automobile. Any shift linkage may be used. If a sequential shift gearbox is used, the car must carry a weight penalty equal to 1.25 percent of the weight as listed on the spec line. If a synchromesh engagement transmission is used, the weight may be reduced by 1.25 percent of the weight listed on the spec line. A synchromesh gearbox is one having a friction mechanism to allow engagement. Note: The minimum vehicle weight is to be rounded to the nearest pound. Air, hydraulic or electric actuation of the gearshift mechanism is not allowed. For front engine, rear drive cars requiring the transmission to be attached to the engine, the transmission front seal shall be within twelve (12) inches of the back of the engine block. On front engine/rear drive cars, the transmission front seal is that seal which is within 5" of the gear on the input shaft which meshes with the foremost gear on the counter/layshaft.

A functional reverse is defined as "operable by the driver from his normal seated position and capable of sustained movement of the vehicle, under its own power, in a reverse direction." A driver-operated device for locking out reverse gear may be added provided it does not prevent prompt engagement of reverse in an emergency situation.

11. Heavy duty propeller shaft(s) and/or drive shaft(s) may be used. Steel retaining strap(s) shall be used to prevent drive shaft failure from dropping or entering driver compartment.

12. Any axle tube, final drive housing, gear ratio, limited slip, or locked differential may be used. Final drive units which permit ratio changes while the car is in motion are prohibited. GT cars registered after January 1, 1990 or GT cars converted to Section F.2., specifications, using the front engine/rear drive configuration, shall use a "closed tube" rear axle housing.

13. Engine and transmission mounts may be of alternate shape and/or material. Cars with engines mounted longitudinal to the chassis MAY relocate the engine in a longitudinal, not lateral, direction within the following restrictions: (Note: A tolerance of up to a 1.0 inch setback is allowed if the engine is relocated.)

    A. V8, V6, and V4 engines shall align the center of the foremost spark plug hole in line with the front axle spindles.

    B. In-line six (6) cylinder engines shall align the center of the first spark plug hole (from the front) in line with the front axle spindles.

    C. In-line four (4) cylinder engines shall align the center of the first spark plug hole (from the front) in line with the front axle spindles.

    D. Rotary engines shall align the forward most spark plug hole in line with front axle spindles.

    E. The engine may be rotated about the crankshaft centerline (lean over) a maximum of fifteen (15) degrees unless otherwise noted and shall not cause hood bulges.

14. Any transverse mounted engine may be rotated for axle/CV

joint alignment. Any readily available transmission having a functional reverse and no more than five (5) forward speeds may be used, provided it is mounted to the rear of the engine. All transverse engines may be rotated 180 degrees. A transverse mounted engine may be rotated to a longitudinal position that places the crankshaft centerline on the longitudinal centerline of the car (shall conform to all restrictions in Section 9.1.2.F.4.e). The engine may be rotated about the crankshaft (lean over) a maximum of fifteen (15) degrees unless otherwise noted and shall not cause hood bulges. Rear axle / suspension per GTCS 9.1.2.F.2.

f. Engine, Reciprocating

1. Engines may be rebored a maximum of 1.2mm (0.047 inch) over the standard bore size listed in the GTCS. A cylinder block from any model from the same manufacturer which is of the same material and dimensionally identical throughout, except for non-critical bosses, is permitted.
2. Crankshaft main bearing caps may be modified or substituted. Main bearing cap straps or girdles and/or additional main bearing cap bolts may be used, provided that no material is added to the block for their attachment.
3. The crankshaft may be replaced with another of the same basic material, but with no change in stroke and provided the angles of the crank throws remain the same. The engine firing order shall remain unchanged.
4. Connecting rods may be replaced with any connecting rod of steel (ferrous) material. Aluminum, titanium, and non-metal connecting rods are prohibited, except where fitted as standard.
5. Any pistons and piston pins may be used.
6. Any camshaft(s) may be used, provided locations are (is) the same as standard.
7. Any cam followers may be used, except that roller cam followers shall not be used unless fitted as standard equipment.
8. Any rocker arms and rocker assembly supports may be used.
9. Valve sizes are unrestricted except when limited by the GTCS for specific automobiles. Centerlines shall not be altered. Valves may be of alternate material; non-metal is prohibited.
10. Compression ratio may be altered by machining, using any head gasket(s) or elimination of head gasket(s).

g. Engine, Rotary Piston

1. The capacity of the working chamber(s) shall not be changed.
2. The eccentric shaft may be replaced with another of the same basic material, but no changes in eccentricity or journal dimensions are permitted.
3. Rotor is unrestricted, providing the material and number of lobes remain unchanged.
4. Alternate rotor housings are allowed only as listed in the GTCS for specific automobiles. No changes are allowed in the epitrochoidal curve in alternate housing.

h. Cooling Systems

1. Cooling fan(s) may be modified, substituted, or removed. Electrically operated cooling fan(s) may be installed, provided it (they) serve no other purpose. The use of any engine, transmission, and/or differential oil coolers(s) is (are) permitted provided it (they) are mounted completely within or under the bodywork, but not in the driver/passenger compartment. Associated oil cooler pumps and lines are permitted for the transmission and differential. Air ducts may be fitted to the oil cooler(s) as specifically authorized herein.

2. Any water radiator is allowed, provided there are no changes in the exterior bodywork to accommodate its use. It shall not be located in the driver/ passenger compartment. Separate expansion or header tank(s) are permitted, provided they are mounted in the engine compartment. The heater core may be removed entirely but not modified or replaced.

3. Sealing or shrouding the airflow area between the normal grill opening and the water radiator is permitted.

4. On water cooled cars, thermostats may be modified or replaced with blanking sleeves or restrictors.

5. Alternate fan and fan shroud are permitted on air cooled engines.

i. Fuel Induction System

All inducted air shall pass through venturi(s), maximum one (1) per cylinder or rotor.

1. Any air filter(s) may be used, or the filter(s) may be removed. Velocity stack(s) and/or air box(es) may be fitted. Air may be ducted to the carburetor(s) provided the ducting is contained within the engine compartment and air is supplied through normal openings in the bodywork (or as specifically authorized herein).

2. Any fuel pump(s) may be used and the location(s) may be changed. Fuel pump(s) shall not be located in the driver/ passenger compartment.

3. All fuel/oil lines passing through the driver/passenger compartment shall be steel or metal braided hose. Number of fuel lines is unrestricted.

4. Carburetors:
   A. Reciprocating engines: Carburetor(s) and intake manifold(s) are unrestricted except as limited in the GTCS for a specific make/ model. All cars with restricted carburetion are required to use I.R. manifolds with no plenums or balance pipes unless using an SIR or otherwise restricted for specific automobiles. Intake manifold(s) shall be attached to the head(s) without modification to the head(s).

   B. Rotary engines: Carburetor and intake manifold are unrestricted except as limited in the GTCS for a specific make/ model. All cars with restricted carburetion are required to use I.R. manifolds with no plenums or balance pipes, unless using an SIR. Intake manifold(s) shall be attached to the end cover(s) or rotor housing(s) without modification to the end cover(s) or rotor housing(s).

   C. No portion of the intake manifold(s) may extend into the

intake ports (reciprocating and rotary engines.)

D. Carburetors shall incorporate a butterfly-type throttle plate for engine speed control.

E. Where Weber or Weber-type carburetors are specified and used, they shall retain their standard configurations of fuel distribution. This is to prohibit annular discharge carburetors.

F. Where Weber carburetors are specified, Weber-type carburetors may be substituted. The following are approved Weber-type carburetors: Weber, Solex, SK, Mikuni, Delorto, Berg, and PMO.

5. Any car may utilize fuel injection, whether originally equipped with fuel injection or not. The following restrictions apply.

   A. Both method and manufacturer are open.

   B. Intake manifold shall be of the individual runner type, unless using an SIR or otherwise notes on the vehicle spec line. Cars using an SIR may use any manifold type.

   C. Only butterfly-type throttle *plates for engine speed control*, one per cylinder or rotor, *are permitted* if intake restrictors *and/or chokes* are specified on the vehicle specification line, the restrictors shall be round orifices (unless otherwise specified) and located within four (4) inches of the throttle butterfly. SIR location is unrestricted so long as all SIR criteria are met. Restrictors shall be a minimum .060" thickness and of the specified diameter.

   D. All inducted air for each cylinder must pass through the specified restrictor. Fuel injected cars, unless otherwise specified, shall use the same individual venturi restriction size specified for a car using carbureted induction.

   E. The number of injectors shall be one (1) per cylinder (unless otherwise noted on the vehicle specification line).

   F. Rotary engines may use two (2) injectors per rotor.

6. Supercharging/turbocharging is prohibited.

7. Float(s) shall not be removed or altered to produce (a) floatless carburetor(s).

8. Any throttle linkage may be used.

9. Induction systems shall be equipped with a positive method of throttle closing by means of (an) external spring(s).

j. Brakes

1. Any dual master cylinders and/or pressure equalizing/regulating device(s) are permitted.

2. Servo-assist systems are unrestricted.

3. Backing plates/dirt shields may be ventilated or removed. Brake air ducts may be fitted within the provisions of these rules.

4. The hand brake may be removed.

5. Brake lines shall be steel or metal braided hose. They may be relocated and may be given additional protection.

6. Brake calipers and/or drums are unrestricted except as limited by the GTCS for a specific make/model. Brake rotors shall be ferrous material but are otherwise unrestricted. Brake rotors/ drums shall be located in the original position (e.g., inboard vs. outboard).

7. Water cooled brakes are permitted, maximum reservoir capacity two (2) gallons, maximum line size 3/16 inch I.D. The water shall be atomized by an atomizing nozzle, and the water shall enter the air duct a minimum of twelve (12) inches from the centerline of the spindle/axle.

NOTES:

GT2 Cars - ACURA

Model	Years	Body Style	Drive-line	Wheel-base (in)	Notes
NSX	NA	2dr	RWD	99.6	The fuel cell(s) may be relocated to the front trunk area.
RSX	NA	2dr	FWD	101.2	No mid-engine mounting. Hood bulge permitted with no openings.

Engines - ACURA

Engine Family	Engine Type	Bore x Stroke (mm)	Disp. (cc)	Head Type	Valves/ Cyl.	Fuel Induc-tion	Weight (lbs)	Notes
	DOHC	87.0 x 84.0	1997	Alum, Crossflow	4	Automotive type sidedraft	1950	
	DOHC	87.0 x 90.7	2157	Alum, Crossflow	4	Automotive type sidedraft	1950	
	DOHC	89.9 x 78.0	2971	Alum, Crossflow	4	Automotive type sidedraft	2280	
	DOHC	93.0 x 78.0	3176	Alum, Crossflow	4	Automotive type w/ 40mm choke(s)	2330	
	SOHC	89.0 x 86.0	3210	Alum, Crossflow	4	37mm SIR	2280	
	SOHC	89.0 x 93.0	3471	Alum, Crossflow	4	37mm SIR	2280	

GT2 Cars - ALFA ROMEO

Model	Years	Body Style	Drive-line	Wheel-base (in)	Notes
GTV	NA	2dr	RWD	94.5	Hood modifications allowed for carburetors.

Engines - ALFA ROMEO

Engine Family	Engine Type	Bore x Stroke (mm)	Disp. (cc)	Head Type	Valves/ Cyl.	Fuel Induction	Weight (lbs)	Notes
	SOHC	88.0 x 68.3	2492	Alum, Crossflow	2	46 IDA or (3) 48mm automotive type w/ 42mm choke(s)	2030	
	SOHC	93.0 x 72.6	2959	Alum, Crossflow	2	46 IDA or (3) 48mm automotive type w/ 42mm choke(s)	2180	

GT2 Cars - AUDI

Model	Years	Body Style	Drive-line	Wheel-base (in)	Notes
TT Coupe	NA	2dr	FWD	97.3	

Engines - AUDI

Engine Family	Engine Type	Bore x Stroke (mm)	Disp. (cc)	Head Type	Valves/ Cyl.	Fuel Induction	Weight (lbs)	Notes
	DOHC	82.5 x 92.8	1984	Alum, Crossflow	4	(2) automotive type w/ 48mm choke(s)	1850	

GT2 Cars - BLMI

Model	Years	Body Style	Drive-line	Wheel-base (in)	Notes
MGB GT V8 & RV8	NA	2dr	RWD	91.0	
TR8	*NA*	*2dr*	*RWD*	*85.0*	

Engines - BLMI

Engine Family	Engine Type	Bore x Stroke (mm)	Disp. (cc)	Head Type	Valves/ Cyl.	Fuel Induction	Weight (lbs)	Notes
	OHV	71.1 x 88.9	3528	Alum, Crossflow	2	38mm SIR	2280	*Alternate induction: Holley P/N 0-80507-1 (390 CFM) on unrestricted manifold with a mandatory plate between the carburetor and plenum of 0.060" flat steel or aluminum plate with four (4) 1 1/16" holes. Spacer is unrestricted. The restrictor plate shall be positioned within 4" of the throttle butterflies. All inducted air shall pass through the specified restrictor plate.*

GT2 Cars - BMW

Model	Years	Body Style	Drive-line	Wheel-base (in)	Notes
325	84-91	2dr	RWD	101.2	
M3 (E30)	88-91	2dr	RWD	101.2	
M3 (E36)	95-99	2dr	RWD	106.3	
M3 (E46)	00-	2dr	RWD	106.3	
330ci (E46)	01-	2dr	RWD	107.3	

Engines - BMW

Engine Family	Engine Type	Bore x Stroke (mm)	Disp. (cc)	Head Type	Valves/ Cyl.	Fuel Induction	Weight (lbs)	Notes
S14	DOHC	93.4 x 84.0	2302	Alum, Crossflow	4	Unrestricted automotive type	2080	
M20	SOHC	84.1 x 75.0	2494	Alum, Crossflow	2	(3) 48mm w/ 40mm choke(s)	2080	
M50	DOHC	84.1 x 75.0	2494	Alum, Crossflow	4	Unrestricted automotive type	2280	

S50	DOHC	86.0 x 85.8	2990	Alum, Crossflow	4	(3) 45mm Weber w/ 38mm choke(s)	2280	
S50B32	DOHC	86.4 x 91.0	3201	Alum. Crossflow	4	37mm SIR	2280	
S52	DOHC	86.4 x 89.6	3152	Alum, Crossflow	4	37mm SIR	2280	
S54	DOHC	87.0 x 91.0	3246	Alum. Crossflow	4	37mm SIR	2280	

GT2 Cars - CHEVROLET

Model	Years	Body Style	Drive-line	Wheel-base (in)	Notes
Cavilier Z24	NA	2dr	FWD	104.0	
Monza	75-80	2dr	RWD	97.0	

Engines - CHEVROLET

Engine Family	Engine Type	Bore x Stroke (mm)	Disp. (cc)	Head Type	Valves/ Cyl.	Fuel Induc-tion	Weight (lbs)	Notes
	DOHC	89.9 x 89.03	2210	Alum, Crossflow	4		1950	GM racing block #XGB615 and cylinder head #XGBH614 allowed.
	DOHC	92.2 x 85.09	2272	Alum, Crossflow	2		2080	
	DOHC	90.0 x 94.0	2392	Alum, Crossflow	4		2080	
	OHV	101.6 x 82.6	2679	Alum, Crossflow	2	(2) automotive type w/ 48mm choke(s)	2030	
	OHV	89.0 x 84.0	3136	Iron, Cross-flow	2	Unrestricted automotive type or 39mm SIR	2150	

GT2 Cars - CHRYSLER/DODGE/PLYMOUTH

Model	Years	Body Style	Drive-line	Wheel-base (in)	Notes
Breeze / Stratus	NA	2dr	FWD	108.0	
Neon	NA	2dr, 4dr	FWD	104.0	
Daytona / Laser	84-87	2dr	FWD	97.0	Turbo Z body panels allowed.

Engines - CHRYSLER/DODGE/PLYMOUTH

Engine Family	Engine Type	Bore x Stroke (mm)	Disp. (cc)	Head Type	Valves/ Cyl.	Fuel Induc-tion	Weight (lbs)	Notes
	SOHC	87.5 x 83.0	1995	Alum, Crossflow	4	Unrestricted au-tomotive type	1950	
	DOHC	87.5 x 83.0	1995	Alum, Crossflow	4	Unrestricted au-tomotive type	1950	
	SOHC	87.5 x 92.0	2213	Alum, Non-Crossflow	2	(2) automotive type w/ 50mm choke(s)	2080	

GT2 Cars - FERRARI

Model	Years	Body Style	Drive-line	Wheel-base (in)	Notes
308 GTB	76-	2dr	RWD	92.1	Fuel cell(s) must comply with GCR 9.3 Fuel Cell Specifications but may be relocated to front trunk or remain in OEM saddle tank locations.
288, 328, 348, 355	NA	2dr	RWD	96.5	Fuel cell(s) must comply with GCR 9.3 Fuel Cell Spefifications but may be relocated to front trunk or remain in OEM saddle tank locations. Engine may be rotated longitudinally.

Engines - FERRARI

Engine Family	Engine Type	Bore x Stroke (mm)	Disp. (cc)	Head Type	Valves/ Cyl.	Fuel Induc-tion	Weight (lbs)	Notes
	DOHC	81.0 x 71.0	2926	Alum, Crossflow	2	(4) Weber 40 DCNF	2280	
	DOHC	83.5 x 68.0	2980	Alum, Crossflow	4	37mm SIR	2280	

GT2 Cars - FORD

Model	Years	Body Style	Drive-line	Wheel-base (in)	Notes
Capri I, II	NA	2dr	RWD	100.8	
Mustang	74-78	2dr	RWD	100.8	
Mustang	79-93	2dr	RWD	100.5	
Probe	NA	2dr	FWD	99.0/102.9	

Engines - FORD

Engine Family	Engine Type	Bore x Stroke (mm)	Disp. (cc)	Head Type	Valves/ Cyl.	Fuel Induction	Weight (lbs)	Notes
	SOHC	91.0 x 77.0	1993	Alum, Crossflow	2	(2) Automotive type	1950	
	DOHC	84.5 x 74.2	2496	Alum, Crossflow	4	Unrestricted automotive type	2250	

Engines - FORD (cont.)

Engine Family	Engine Type	Bore x Stroke (mm)	Disp. (cc)	Head Type	Valves/ Cyl.	Fuel Induction	Weight (lbs)	Notes
	OHV	90.0 x 66.8	2550	Iron, Cross-flow	2	Unrestricted automotive type	2180	
	OHV	93.0 x 68.6	2796	Iron, Cross-flow	2	Unrestricted automotive type	2180	
	OHV	93.0 x 72.6	2934	Iron, Cross-flow	2	Unrestricted automotive type	2180	World Products 2.9 OHV cylinder head allowed.

GT2 Cars - INFINITI

Model	Years	Body Style	Drive-line	Wheel-base (in)	Notes
G20	99-02	4dr	FWD	102.4/97.5	

Engines - INFINITI

Engine Family	Engine Type	Bore x Stroke (mm)	Disp. (cc)	Head Type	Valves/ Cyl.	Fuel Induction	Weight (lbs)	Notes
	DOHC	86.0 x 86.0	1998	Alum, Crossflow	4	Unrestricted automotive type	1950	

GT2 Cars - HONDA

Model	Years	Body Style	Drive-line	Wheel-base (in)	Notes
Prelude	93-	2dr	FWD	100.4	

Engines - HONDA

Engine Family	Engine Type	Bore x Stroke (mm)	Disp. (cc)	Head Type	Valves/ Cyl.	Fuel Induction	Weight (lbs)	Notes
	DOHC	87.0 x 90.7	2157	Alum, Crossflow	4	Unrestricted automotive type	2180	VTEC not allowed.
	DOHC	86.9 x 95.0	2252	Alum, Crossflow	4	Unrestricted automotive type	2230	

GT2 Cars - JAGUAR

Model	Years	Body Style	Drive-line	Wheel-base (in)	Notes
XKE Coupe, Roadster	NA	2dr	RWD	96.0	Roadster windshield may be removed and a low front hoop roll cage fitted.

Engines - JAGUAR

Engine Family	Engine Type	Bore x Stroke (mm)	Disp. (cc)	Head Type	Valves/ Cyl.	Fuel Induction	Weight (lbs)	Notes
	DOHC	87.1 x 105.9	3781	Alum, Crossflow	2	(3) 2″ SU or (2) 1.75″ Stromberg or (3) 48mm auto-type on I.R. manifold	2250	

	DOHC	92.0 x 105.9	4235	Alum, Crossflow	2	(3) 2" SU or (2) 1.75" Stromberg or (3) 48mm auto-type on I.R. manifold	2250	

GT2 Cars - LOTUS

Model	Years	Body Style	Drive-line	Wheel-base (in)	Notes
Esprit	75-	2dr	RWD	96.0	

Engines - LOTUS

Engine Family	Engine Type	Bore x Stroke (mm)	Disp. (cc)	Head Type	Valves/ Cyl.	Fuel Induc-tion	Weight (lbs)	Notes
	DOHC	95.3 x 76.2	2174	Alum, Crossflow	4	(2) automotive type w/ 48mm choke(s)	2180	

GT2 Cars - MAZDA

Model	Years	Body Style	Drive-line	Wheel-base (in)	Notes
MX-5 / Miata	90-	2dr	RWD	89.2	Rotary engine setback from the front spindle centerline to the front spark plug is 4.5".
RX-7	NA	2dr	RWD	95.2 / 95.5 / 95.7	Downing GTS body kit allowed with 75 lbs. weight increase. This "one-off" body allowance is not meant as an open invitation for others to be classified. *May run transaxle with 100 lb. weight penalty.*
RX-8	NA	2dr	RWD	98.0	*May run transaxle with 100 lb. weight penalty.*

Engines - MAZDA

Engine Family	Engine Type	Bore x Stroke (mm)	Disp. (cc)	Head Type	Valves/ Cyl.	Fuel Induc-tion	Weight (lbs)	Notes
12A	Street Port		2292			40mm choke(s)	1830	
12A	Street / Bridge / Peripheral Port		2292			Unrestricted au-tomotive type	1930	

13B	Street / Bridge Port		2616			(1) auto-type 2bbl w/ 44mm choke(s)	1930	
13B	Peripheral Port		2616			Unrestricted automotive type	2030	
Renesis	Street Port		2701			44mm choke(s)	1930	
	DOHC	89.0 x 79.5	2967	Alum, Crossflow	4	6 individual throttle bodies w/ 40mm choke(s)	2230	Hood bulge allowed.
20B			3924			40mm SIR	2230	

GT2 Cars - MERCEDES BENZ

Model	Years	Body Style	Drive-line	Wheel-base (in)	Notes
190E	85-92	4dr	RWD	104.9	

Engines - MERCEDES BENZ

Engine Family	Engine Type	Bore x Stroke (mm)	Disp. (cc)	Head Type	Valves/ Cyl.	Fuel Induction	Weight (lbs)	Notes
	SOHC	82.9 x 80.3	2599	Alum, Crossflow	2	Unrestricted automotive type	2200	

GT2 Cars - MERCURY

Model	Years	Body Style	Drive-line	Wheel-base (in)	Notes
Capri	79-86	2dr	RWD	100.8	

Engines - MERCURY

Engine Family	Engine Type	Bore x Stroke (mm)	Disp. (cc)	Head Type	Valves/ Cyl.	Fuel Induction	Weight (lbs)	Notes
	OHV	93.0 x 68.6	2796	Iron, Crossflow	2	Unrestricted automotive type	2180	
	OHV	93.0 x 72.6	2934	Iron, Crossflow	2	Unrestricted automotive type	2180	World Products 2.9 OHV cylinder head allowed.

GT2 Cars - NISSAN

Model	Years	Body Style	Drive-line	Wheel-base (in)	Notes
240Z / 260Z / 280Z	-78	2dr	RWD	90.7	Headlight covers allowed. Hood bulge allowed.
280-Z 2+2	NA	2dr	RWD	102.6	
280-ZX	79-	2dr	RWD	91.3	
240-SX	NA	2dr	RWD	97.5	
240-SX S13	NA	2dr	RWD	97.5	Hood bulge allowed.
240-SX S14	NA	2dr	RWD	99.4	Hood bulge allowed.
300-ZX Z31	-89	2dr	RWD	91.3	Hood bulge allowed.
300-ZX Z32	90-	2dr	RWD	96.5/101.2	Hood bulge allowed.
350Z	NA	2dr	RWD	97.5 / 99.4 /104.3/90.7 /91.3/102.6 /104.3/91.3 /96.5/101.2 / 104.4	Doors may be pinned from the bottom at door bar height. Hood bulge allowed.

Engines - NISSAN

Engine Family	Engine Type	Bore x Stroke (mm)	Disp. (cc)	Head Type	Valves/ Cyl.	Fuel Induc-tion	Weight (lbs)	Notes
SR20DE/VE	DOHC	86.0 x 86.0	1998	Alum, Crossflow	4	Unrestricted au-tomotive type	1950	
L24	SOHC	83.0 x 73.3	2380	Alum, Non-Crossflow	2	(3) 50mm w/ 46mm choke(s)	2080	
KA24E	SOHC	89.0 x 96.0	2389	Alum, Crossflow	3	Unrestricted	2050	
KA24DE	DOHC	89.0 x 96.0	2389	Alum, Crossflow	4		2080	

VQ25	DOHC	85.0 x 73.3	2495	Alum, Crossflow	4	37mm SIR	2130	Nismo cyl head #11040RRZ30 and 11090RRZ30 allowed.
L26	SOHC	83.0 x 79.0	2565	Alum, Non-Crossflow	2	(3) 50mm w/ 46mm choke(s)	2080	
VG30	*SOHC*	87.0 x 77.2	2754	Alum, Non-Crossflow	2	(3) 50mm w/ 46mm choke(s)	2080	
L28	SOHC	86.1 x 79.0	2760	Alum, Non-Crossflow	2	(3) 50mm w/ 46mm choke(s)	2080	
L28	SOHC	86.1 x 83.0	2899	Alum, Crossflow	2	(3) 50mm w/ 46mm choke(s)	2180	
VG30	DOHC	87.0 x 83.0	2960	Alum, Crossflow	4	Automotive type sidedraft w/ 40mm choke(s) or 37mm SIR	2280 2230 w/ 37mm SIR	An SCCA approved F.I. kit of OEM origin is allowed. Contact the National Office for part numbers and specs. Nismo cyl head #11040RRZ30 and 11090RRZ30 allowed.
VQ30	DOHC	93.0 x 73.3	2988	Alum, Crossflow	4	Automotive type sidedraft w/ 40mm choke(s) or 37mm SIR	2280	Nismo cyl head #11040RRZ30 and 11090RRZ30 allowed.
VQ35 w/ VQ30 crankshaft	DOHC	95.5 x 73.3	3150.3	Alum, Crossflow	4	37mm SIR	2280	Nismo cyl head #11040RRZ30 and 11090RRZ30 allowed.
VQ30 w/ VQ35 crankshaft	DOHC	93.0 x 81.4	3317.7	Alum, Crossflow	4	37mm SIR	2280	Nismo cyl head #11040RRZ30 and 11090RRZ30 allowed.
VQ35	DOHC	95.5 x 81.4	3498	Alum, Crossflow	4	37mm SIR	2280	Nismo cyl head #11040RRZ30 and 11090RRZ30 allowed.

GT2 Cars - PANOZ

Model	Years	Body Style	Drive-line	Wheel-base (in)	Notes
Esperante GTS	NA	2dr	RWD	107.6	Cars must be prepared to Panoz Esperante GTS specifications and competitors must have a copy of the current GTS rules in their possession. Wheels: (F) 18x10 (R)18x11, Track (F) 64.0 (R)67.8. Any tire with a diameter of 17″ or 18″ may be used provided the tire does not exceed a maximum cross section width of 11.5″ in the front and 12.5″ in the rear. Internal modification to stock Penske 7500 shocks is permitted. Shock seals are not required. Alternate rotor Brembo #09-A026.13 and #09-A026.23 allowed. Revised brackets or spacers are permitted to relocate the calipers.

Engines - PANOZ

Engine Family	Engine Type	Bore x Stroke (mm)	Disp. (cc)	Head Type	Valves/ Cyl.	Fuel Induction	Weight (lbs)	Notes
	OHV	101.6 x 88.9	5754	Alum, Crossflow	2	Holly 4bbl. 750 cfm #0-4779C. ProForm 67100C throttle body - Panoz part #GTS6-3349 allowed.	2880	Maximum compression ratio of 10.5:1. Fresh air intake air cleaner housing Panoz #GTS9-3348 allowed. *Engine seals are no longer being installed; engines must comply with Panoz GTS engine requirements available at http://www.scca.com/contentpage.aspx?content=74.*

GT2 Cars - PONTIAC

Model	Years	Body Style	Drive-line	Wheel-base (in)	Notes
Fiero	NA	2dr	FWD	93.4	May convert to front engine/rear wheel drive. If OEM engine location is used (i.e. rear-engine) IRS weight penalty is waived. Air cleaner may protrude through engine hatch.
Grand Am	NA	2dr	FWD	103.4	
Sunfire GT	NA	2dr	FWD	104.0	

Engines - PONTIAC

Engine Family	Engine Type	Bore x Stroke (mm)	Disp. (cc)	Head Type	Valves/ Cyl.	Fuel Induction	Weight (lbs)	Notes
	DOHC	86.0 x 94.6	2198	Alum, Crossflow	4		1950	
LE5 Ecotech	DOHC	88.9 x 89.03	2210	Alum, Crossflow	4		1950	GM racing block #XGB615 and cylinder head #XGBH614 allowed.
	DOHC	92.2 x 85.09	2272	Alum, Crossflow	4	(2) 48mm w/ 38mm choke(s)	2080	
	DOHC	90.0 x 94.0	2392	Alum, Crossflow	4		2080	
	OHV	101.6 x 76.2	2471	Iron, Cross-flow	2	(2) Automotive type w/ 48mm choke(s)	1930	

	OHV	101.6 x 82.6	2679	Iron, Cross-flow	2	(2) Automotive type w/ 48mm choke(s)	2030	
	OHV	89.0 x 76.0	2837	Iron, Cross-flow	2	Unrestricted automotive type or 39mm SIR	2080	Factory aluminum cylinder heads allowed.
	OHV	89.0 x 84.0	3136	Iron, Cross-flow	2	Unrestricted automotive type or 39mm SIR	2150	
	OHV	92.0 x 84.0	3350	Iron, Cross-flow	2	Unrestricted automotive type or 39mm SIR	2230	
	OHV	94.0 x 84.0	3498	Iron, Cross-flow	2	Unrestricted automotive type or 39mm SIR	2280	

GT2 Cars - PORSCHE

Model	Years	Body Style	Drive-line	Wheel-base (in)	Notes
911 Coupe & Targe	68-	2dr	RWD	89.4	Factory spoiler: 930-512-023-00 & 530-512-021-00 (or kit #930-512-901-01), no reproductions. Windshield may be removed on Targa and a low front hoop roll cage may be fitted.
914-6	NA	2dr	RWD	96.5	Top panels may remain if bolted or pinned. Roof of alt. material allowed. Windshield may be removed and a low front roll cage may be fitted. 75-76 bumpers allowed.
944	NA	2dr	RWD	94.5	
968	NA	2dr	RWD	94.5	
Boxster	NA	2dr	RWD	95.1	Top panels may remain if bolted or pinned. Roof of alt. material allowed. Windshield may be removed and a low front roll cage may be fitted.

996 GT3 Cup	98-05	2dr	RWD	92.5	Cars must be prepared in accordance with the appropriate model/year Porsche factory 911 GT3 Cup parts catalog/service manual. Cars may not be altered in any way except as authorized below. Updating and backdating is allowed after the factory Vehicle Technical Specifications (VTS) document is updated and approved. Drivers must have the correct year manuals as they apply to their specific car in their possession. Safety, drivers comfort, driver control and instrumentation items may be modified per the GCR. Original factory installed Matter/IMV roll cages are allowed. The stock unmodified fuel tank is allowed. Side door windows must be removed and windshield clips must be installed per GCR 9.3 Windshield Clips/Rear Window Straps. All other SCCA safety standards apply. The following additional modifications are authorized: Alternate hood provided it is a facsimile of the stock part. Any wheel, including 5 bolt (and the required 5 bolt modification to the hubs) provided they do not exceed 18x9 F and 18x11 R. Tires per GCR. Battery size and location is unrestricted. Shocks are unrestricted but they shall be installed in the stock locations with the stock, unmodified pick up points. Any suspension settings are allowed provided they are achieved without modifications. Machining of suspension components and pick up points to achieve caster/camber/toe is not allowed. Lubricants, consumable fluids (brake fluid, coolant etc.) and oil filters are open free. Modifications listed in Grand Am, IMSA Cup, World Challenge or any other rules, except those listed above, are specifically not allowed.

Engines - PORSCHE

Engine Family	Engine Type	Bore x Stroke (mm)	Disp. (cc)	Head Type	Valves/ Cyl.	Fuel Induction	Weight (lbs)	Notes
	SOHC	80.0 x 66.0	1991	Alum, Crossflow	2	(2) Automotive type w/ 46mm choke(s)	2030	OEM 2-valve air-cooled heads may be modified to utilize two spark plugs per cylinder. Alt. head: 911-104-302-OR (w/ sealed injector port).
	SOHC	84.0 x 66.0	2195	Alum, Crossflow	2	(2) Automotive type w/ 46mm choke(s)	2030	OEM 2-valve air-cooled heads may be modified to utilize two spark plugs per cylinder. Alt. head: 911-104-302-OR (w/ sealed injector port).
	SOHC	84.0 x 70.4	2341	Alum, Crossflow	2	(2) Automotive type w/ 46mm choke(s)	2030	
	SOHC	100.0 x 78.9	2478	Alum, Crossflow	2	(2) Weber-type w/ 48mm choke(s)	2080	Alt. 4 valve head #944 104 013 03.
	DOHC	85.5 x 72.0	2480	Alum, Crossflow	4	(2) Weber-type w/ 34mm choke(s)	2080	
	SOHC	104.0 x 78.9	2681	Alum, Crossflow	2		2150	

	DOHC	90.0 x 70.4	2687	Alum, Crossflow	4	37mm SIR	2180	
	SOHC	100.0 x 88.0	2766	Alum, Crossflow	2	36mm SIR	2180	
	SOHC	92.0 x 70.4	2808	Alum, Crossflow	2	(2) Automotive type w/ 46mm choke(s)	2030	
	DOHC	104.0 x 88.0	2981	Alum, Crossflow	4	Unrestricted automotive type	2180	
	SOHC	95.0 x 70.4	2992	Alum, Crossflow	2	(2) Automotive type w/ 46mm choke(s)	2080	
	DOHC	93.0 x 78.0	3179	Alum, Crossflow	4	40mm choke(s)	2380	
	SOHC	Unspecified	3200	Alum, Crossflow	2	(2) Automotive type w/ 46mm choke(s)	2160	
	SOHC	Unspecified	3400	Alum, Crossflow	2	(2) Automotive type w/ 46mm choke(s)	2220	
	SOHC	Unspecified	3600	Alum, Crossflow	2	35.5mm SIR	2160	
	SOHC	Unspecified	3600	Alum, Crossflow	2	Unrestricted automotive type	2280	
	SOHC	Unspecified	3800	Alum, Crossflow	2	36.5mm SIR	2280	
	SOHC	Unspecified	3800	Alum, Crossflow	2	Unrestricted automotive type	2380	
	DOHC	100.0 x 76.4	3595	Alum, Crossflow	4	OEM fuel injection w/ stock, unmodified throttle body	2730	Porsche Cup car only.

GT2 Cars - SUNBEAM

Model	Years	Body Style	Drive-line	Wheel-base (in)	Notes
Tiger	NA	2dr	RWD	86.0	Windshield may be removed and a low front hoop roll cage may be fitted.

Engines - SUNBEAM

Engine Family	Engine Type	Bore x Stroke (mm)	Disp. (cc)	Head Type	Valves/ Cyl.	Fuel Induction	Weight (lbs)	Notes
	OHV	96.5 x 72.9	4265	Iron, Cross-flow	2	Ford C30 FAB, C30F-9510E, C40F-9519-1E* *Manifold: Stock Sunbeam Tiger manifold only. Holley P/N 0-80507-1 (390 CFM) on unrestricted manifold. A restrictor plate between the carburetor and plenum is mandatory for cars running the 390cfm carburetor: 0.060" flat steel or aluminum plate with four (4) 1 1/16" holes. Spacer is unrestricted. The restrictor plate shall be positioned within 4" of the throttle butterflies. All inducted air shall pass through the specified restrictor plate.	2280	Cylinder Heads: Any Ford 260, 289, or 302 Windsor V-8 cast-iron production cylinder head, delivered on U.S. model cars or trucks, and bearing unmodified factory casting numbers beginning in C, D, E, or F are allowed. Competitor shall be able to provide documentation from the manufacturer identifying application(s), displacement, engine family, and casting identification. Ford Motorsport engine blocks (P/N M-6010-A50 & M-6010-B50) are allowed.
	OHV	101.6 x 72.9	4728	Iron, Cross-flow	2		2280	

GT2 Cars - TOYOTA

Model	Years	Body Style	Drive-line	Wheel-base (in)	Notes
Celica incl, GTS	82-89	2dr	FWD	99.4	
Celica incl. GTS	90-05	2dr	RWD	99.4	RWD only.
MR-2	91-	2dr	RWD	94.5	No factory rear spoiler/wing. Fuel cell may be relocated to front trunk area. 3S front engine - rear drive conversion @ 1950 lbs.
Solora	00-	2dr	FWD	107.1 / 102.4/97.0	
Supra	NA	2dr	RWD	94.5	

Engines - TOYOTA

Engine Family	Engine Type	Bore x Stroke (mm)	Disp. (cc)	Head Type	Valves/ Cyl.	Fuel Induc-tion	Weight (lbs)	Notes
3S	DOHC	86.0 x 86.0	1998	Alum, Crossflow	4	Automotive type sidedraft	1950	
5S	DOHC	87.0 x 91.0	2164	Alum, Crossflow	4	Automotive type sidedraft	1950	
2RZ	DOHC	95.0 x 86.0	2438	Alum, Crossflow	4	37mm SIR	2080	
5M	DOHC	83.0 x 85.0	2759	Alum, Crossflow	2	(3) 45mm Weber w/ 38mm choke(s)	2180	
1MZ	DOHC	87.5 x 83.0	2995	Alum, Crossflow	4	6 individual throttle bod-ies w/ 40mm choke(s) or 37mm SIR	2280	
2GR	DOHC	94.0 x 86.36	3594	Alum, Crossflow	4	37mm SIR	2280	

GT2 Cars - VOLKSWAGEN

Model	Years	Body Style	Drive-line	Wheel-base (in)	Notes
Corrado	NA	2dr	FWD	97.3	
Golf incl. GTI	NA	2dr	FWD	97.3	

Engines - VOLKSWAGEN

Engine Family	Engine Type	Bore x Stroke (mm)	Disp. (cc)	Head Type	Valves/ Cyl.	Fuel Induc-tion	Weight (lbs)	Notes
	DOHC	82.5 x 92.8	1984	Alum, Crossflow	4	(2) Automotive type w. 48mm choke(s)	1980	
	DOHC	81.0 x 90.3	2782	Alum, Crossflow	4	(2) Automotive type w. 48mm choke(s)	2280	

GT3 Cars - ACURA

Model	Years	Body Style	Drive-line	Wheel-base (in)	Notes
Integra	-93	2dr	FWD	96.5	
Integra	-94	2dr	FWD	101.2	
RSX	02/05/09	2dr	FWD	96.5/101.2	

Engines - ACURA

Engine Family	Engine Type	Bore (mm)	Stroke (mm)	Disp. (cc)	Head Type	Valves / Cyl.	Fuel Induction	Weight (lbs)	Notes
D16A	SOHC	75	90	1590	Alum, Crossflow	4	Unrestricted	1855	
B16A	DOHC	81	77.4	1595	Alum, Crossflow	4	Unrestricted	1855	
B18C	DOHC	81	87.2	1797	Alum, Crossflow	4	Unrestricted	1960	
B18B	DOHC	81	89	1834	Alum, Crossflow	4	*Unrestricted*	2060	
F20C	DOHC	87	84	1997	Alum, Crossflow	4	31mmSIR	2060	
K20A	DOHC	86	86	1998	Alum, Crossflow	4	31mmSIR	2060	
K24	DOHC	87	99	2354	Alum, Crossflow	4	31mm SIR	2195	

GT3 Cars - ALFA ROMEO

Model	Years	Body Style	Drive-line	Wheel-base (in)	Notes

GTV 1750 / 2000	NA	2dr	RWD	92.5	
Sport Sedan	NA	2dr	RWD	98.8	

Engines - ALFA ROMEO

Engine Family	Engine Type	Bore (mm)	Stroke (mm)	Disp. (cc)	Head Type	Valves / Cyl.	Fuel Induction	Weight (lbs)	Notes
	DOHC	80	88.5	1779	Alum, Crossflow	2	Unrestricted	1855	Alt. Head: 19510-01053-04 (twin plug), w/ 100 lb. penalty.
	DOHC	84	88.5	1962	Alum, Crossflow	2	Unrestricted	1960	Alt. Head: 19510-01053-04 (twin plug), w/ 100 lb. penalty.

GT3 Cars - AUDI

Model	Years	Body Style	Drive-line	Wheel-base (in)	Notes
TT Coupe	NA	2dr	FWD	95.6 / 97.3	

Engines - AUDI

Engine Family	Engine Type	Bore (mm)	Stroke (mm)	Disp. (cc)	Head Type	Valves / Cyl.	Fuel Induction	Weight (lbs)	Notes
	SOHC	82.5	92.8	1984	Alum. Crossflow	2	Unrestricted	1960	Alt. Eurospec Sports cyl. head may be used.
	DOHC	82.5	92.8	1984	Alum. Crossflow	4	31mm SIR	2060	

GT3 Cars - BMW

Model	Years	Body Style	Drive-line	Wheel-base (in)	Notes
2002 / 2002ti/tii	NA	2dr	RWD	100.5/98.5	

318 Coupe (E36)	-92	2dr	RWD	106	
318i (E30)	83-91	4dr	RWD	101.2	
318i / 320i (E21)	77-82	4dr	RWD	100.9	
E46	0	2, 4dr	RWD	106.0 / 101.2 / 100.9	
Z3	NA	2dr	RWD	96.3	

Engines - BMW

Engine Family	Engine Type	Bore (mm)	Stroke (mm)	Disp. (cc)	Head Type	Valves / Cyl.	Fuel Induction	Weight (lbs)	Notes
	SOHC	89	71	1767	Alum. Crossflow	2	Unrestricted	1855	
	DOHC	84	81	1796	Alum. Crossflow	4	Unrestricted	1960	
	DOHC	85	83.5	1895	Alum. Crossflow	4	31mm SIR	2060	
	SOHC	89	80	1991	Alum. Crossflow	2	Unrestricted	1960	
	DOHC	93	84	2302	Alum. Crossflow	4	31mm SIR	2195	

GT3 Cars - CHEVROLET

Model	Years	Body Style	Drive-line	Wheel-base (in)	Notes
Vega	NA	2dr	RWD	97	
Corvair Coupe / Yenko Stinger	NA	2dr	RWD	108	Corvair coupes may be modified to Yenko configuration. Non-tube frame track 59.7 (F), 62.9 (R). Rear wheel width: 8". Engine may be centered (side to side) to allow installation of alternate transaxle.
Cavalier Z-24	NA	2dr/4dr	FWD	101.2	

Engines - CHEVROLET

Engine Family	Engine Type	Bore (mm)	Stroke (mm)	Disp. (cc)	Head Type	Valves / Cyl.	Fuel Induction	Weight (lbs)	Notes
	SOHC	86	86	1998	Alum. Crossflow	2	Unrestricted	1960	
	DOHC	88.9	80.3	1998	Alum. Crossflow	4	31mm SIR	2060	
	SOHC	88.9	92.1	2287	Iron, Non-Crossflow	2	Unrestricted	2060	
	OHV	87.4	74.7	2689	Alum. Crossflow	2	(2) Weber 40 IDT or IDA w/ 36mm choke(s) or (4) Rochester 7025023 &7026026 1.5" 1 bbl carbs	2290	

GT3 Cars - CHRYSLER/DODGE/PLYMOUTH

Model	Years	Body Style	Drive-line	Wheel-base (in)	Notes
Neon	NA	2dr, 4dr	FWD	104	
Daytona / Laser	84-88	2dr	FWD	97	
Daytona / Laser	-89	2dr	FWD	97.3	
Horizon	NA	2dr	FWD	96.7	
Omni 024 / Shelby Charger	79-82	2dr	FWD	96.6	
Shadow	NA	2dr	FWD	97	

Engines - CHRYSLER/DODGE/PLYMOUTH

Engine Family	Engine Type	Bore (mm)	Stroke (mm)	Disp. (cc)	Head Type	Valves / Cyl.	Fuel Induction	Weight (lbs)	Notes
	DOHC	85	88	1997	Alum, Crossflow	4	31mm SIR	2060	
	SOHC	85	88	1997	Alum, Crossflow	2	Unrestricted	1960	
	SOHC	87.5	92	2213	Alum, Non-Crossflow	2	Unrestricted	2060	

GT3 Cars - FIAT

Model	Years	Body Style	Drive-line	Wheel-base (in)	Notes
131 Coupe & Sedan, Brava	NA	2dr, 4dr	RWD	98	

Engines - FIAT

Engine Family	Engine Type	Bore (mm)	Stroke (mm)	Disp. (cc)	Head Type	Valves / Cyl.	Fuel Induction	Weight (lbs)	Notes
	DOHC	84.1	89.9	1995	Alum, Crossflow	2	Unrestricted	1960	

GT3 Cars - FORD

Model	Years	Body Style	Drive-line	Wheel-base (in)	Notes
Capri	NA	2dr	RWD	100.8	
Mustang II	74-78	2dr	RWD	96.2	
Mustang	79-93	2dr	RWD	100.4	

Mustang	94-98	2dr	RWD	101.2	
Pinto	NA	2dr	RWD	94	Non-tube frame track: 60.52 (F&R). Spoiler: #D9FZ-6440555-A, End Pieces: D9FZ-6428010-A and D9FZ-6428011-A.
Probe	NA	2dr	FWD	99.0/102.9	

Engines - FORD

Engine Family	Engine Type	Bore (mm)	Stroke (mm)	Disp. (cc)	Head Type	Valves / Cyl.	Fuel Induction	Weight (lbs)	Notes
	SOHC	91	77	1993	Iron, Crossflow	2	Unrestricted	1960	
	SOHC	96	79.4	2301	Iron, Crossflow	2	Unrestricted	2130	Alt. Head: SVO #M-6049-A230
	SOHC	86	86	1998	Alum, Crossflow	2	Unrestricted	1960	
	SOHC	86	94	2189	Alum, Crossflow	3	31mm SIR	2130	
Duratech	DOHC	87.5	94	2260	Alum, Crossflow	4	31mm SIR	2195	

GT3 Cars - HONDA

Model	Years	Body Style	Drive-line	Wheel-base (in)	Notes
Civic	88-91	3dr	FWD	90.6	Hood bulge allowed, no openings.
Civic Coupe	92-95	2dr	FWD	98.4	
Civic Si	06-10	2dr/4dr	FWD	2dr: 104.3 4dr: 106.3	Hood bulge allowed, no openings.
CRX	84-87	3dr	FWD	86.6	Hood bulge allowed, no openings.
CRX	88-91	3dr	FWD	90.6	Hood bulge allowed, no openings.

Engines - HONDA

Engine Family	Engine Type	Bore (mm)	Stroke (mm)	Disp. (cc)	Head Type	Valves / Cyl.	Fuel Induction	Weight (lbs)	Notes
EW	SOHC	74	86.5	1488	Alum. Crossflow	3	Unrestricted	1805	Alt. heads: #12100-PE3-000 or #12100-PE7-000.
D15B	SOHC	75	84.5	1493	Alum. Crossflow	4	Unrestricted	1805	
D16A	SOHC	75	90	1590	Alum. Crossflow	4	Unrestricted	1855	
B16A	DOHC	81	77.4	1595	Alum. Crossflow	4	Unrestricted	1855	
B18C	DOHC	81	87.2	1797	Alum. Crossflow	4	Unrestricted	1960	
B18B	DOHC	81	89	1834	Alum. Crossflow	4	31mm SIR	2060	
F20C	DOHC	87	84	1997	Alum. Crossflow	4	31mm SIR	2060	
K20A	DOHC	86	86	1998	Alum. Crossflow	4	31mm SIR	2060	
K24	DOHC	87	99	2354	Alum. Crossflow	4	31mm SIR	2195	

GT3 Cars - MAZDA

Model	Years	Body Style	Drive-line	Wheel-base (in)	Notes
626	83-87	4dr	FWD	98.8	Rotary engine setback from the front spindle centerline to the front spark plug is 4.5".
MX-3	NA	2dr	FWD	96.3	Rotary engine setback from the front spindle centerline to the front spark plug is 4.5".
MX-5 / Miata	-5	2dr	RWD	89.2 / 91.0	Rotary engine setback from the front spindle centerline to the front spark plug is 4.5".
MX-5	2006	2dr	RWD	91.7	Rotary engine setback from the front spindle centerline to the front spark plug is 4.5".

MX-6	-88	2dr	FWD	99.0/102.8	Rotary engine setback from the front spindle centerline to the front spark plug is 4.5".
RX-2	NA	2dr	RWD	97.3	
RX-3	NA	2dr	RWD	91	
RX-7	NA	2dr	RWD	95.3 / 95.5 / 95.7	Non-tube frame track: 63.2 (F), 62.8 (R).
RX-8	NA	2dr	RWD	98	
Protégé	NA	4dr	FWD	98.4	Rotary engine setback from the front spindle centerline to the front spark plug is 4.5".

Engines - MAZDA

Engine Family	Engine Type	Bore (mm)	Stroke (mm)	Disp. (cc)	Head Type	Valves / Cyl.	Fuel Induction	Weight (lbs)	Notes
B6D	DOHC	78	83.6	1597	Alum. Crossflow	4	Unrestricted	1855	
BP	DOHC	83	85	1839	Alum. Crossflow	4	*Unrestricted*	2060	
	SOHC	86	86	1998	Alum. Crossflow	2	Unrestricted	1960	
MZR	DOHC	87.38	83.06	1999	Alum. Crossflow	4	31mm SIR	2060	
	SOHC	86	94	2189	Alum. Crossflow	2	Unrestricted	2060	
MZR	DOHC	87.5	94	2260	Alum. Crossflow	4	31mm SIR	2195	Hood bulge allowed w/ no openings.
12A	Street Port			2292			Unrestricted	2060	
12A	Bridge Port			2292			(1) auto-type 2bbl w/ 40mm choke(s).	2060	
12A	Peripheral Port			2292			37mm SIR	2250	
13B	Street Port			2616			Unrestricted	*2130*	
13B	Bridge / Peripheral Port			2616			37mm SIR	2250	

Renesis	Street Port		2703			Unrestricted	2250	
Renesis	Bridge / Peripheral Port		2703			37mm SIR	2250	

GT3 Cars - MERCURY

Model	Years	Body Style	Drive-line	Wheel-base (in)	Notes
Capri	79-86	2dr	FWD	100.4	
Cougar	99-02	2dr	FWD	103.0 / 106.4	

Engines - MERCURY

Engine Family	Engine Type	Bore (mm)	Stroke (mm)	Disp. (cc)	Head Type	Valves / Cyl.	Fuel Induction	Weight (lbs)	Notes
	SOHC	91	77	1993	Iron, Crossflow	2	Unrestricted	1960	
	SOHC	96	79.4	2301	Iron, Crossflow	2	Unrestricted	2130	Alt. Head: SVO #M-6049-A230

GT3 Cars - MITSUBISHI / EAGLE

Model	Years	Body Style	Drive-line	Wheel-base (in)	Notes
Talon	NA	2dr	FWD	97.3	
Ecplise	NA	2dr	FWD	97.3	

Engines - MITSUBISHI / EAGLE

Engine Family	Engine Type	Bore (mm)	Stroke (mm)	Disp. (cc)	Head Type	Valves / Cyl.	Fuel Induction	Weight (lbs)	Notes
	DOHC	85	88	1997	Alum, Crossflow	4	31mm SIR	2060	

	SOHC	85	88	1997	Alum. Crossflow	2	Unrestricted	1960	
	SOHC	97.5	92	2213	Alum, Non-Crossflow	2	Unrestricted	2060	

GT3 Cars - NISSAN

Model	Years	Body Style	Drive-line	Wheel-base (in)	Notes
200-SX / S10	77-79	2dr	RWD	92.1	
200-SX / S11	80-83	2dr	RWD	94.5	
200-SX / S12	84-88	2dr	RWD	95.5	
200-SX SER	95-97	2dr	RWD	95.7 / 99.8	
240-SX / S13	NA	2dr	RWD	97.5	Hood bulge allowed, no openings.
240-SX / S14	NA	2dr	RWD	99.4	Hood bulge allowed, no openings.
240Z / 260Z / 280Z	NA	2dr	RWD	90.7	
280-ZX	-79	2dr	RWD	91.3	
300-ZX	NA	2dr	RWD	91.3 / 96.5 / 101.2	
350Z	NA	2dr	RWD	95.3 / 98.4 /104.3/94.5 / 92.1/95.3 / 97.5/ 99.4 / 104.3	
710	NA	2, 4dr	RWD	98.4	
PL510	NA	2, 4dr	RWD	95.3	
Sentra SER Spec V	2002	4dr	FWD	95.7	

Engines - NISSAN

Engine Family	Engine Type	Bore (mm)	Stroke (mm)	Disp. (cc)	Head Type	Valves / Cyl.	Fuel Induction	Weight (lbs)	Notes
L18	SOHC	85	78	1770	Alum, Non-Crossflow	2	Unrestricted	1805	Alt. Heads: #11041-22010, 11041-U0600-A, 11041-U0602-SV, 11041-21901, 11041-N7120.
L20	SOHC	85	86	1952	Alum, Non-Crossflow	2	Unrestricted	1855	Alt. Heads: #11041-22010, 11041-U0600-A, 11041-U0602-SV, 11041-21901, 11041-N7120.
	SOHC	84.5	88	1974	Alum, Crossflow	2	Unrestricted	1960	
SR20DE/VE	DOHC	86	86	1998	Alum, Crossflow	4	31mm SIR	2060	High port (89-94) and low port (95-01) allowed.
L20 w/ Z22 block	SOHC	87	86	2045	Alum, Non-Crossflow	2	Unrestricted	1960	
NAPZ	SOHC	87	92	2188	Alum, Non-Crossflow	2	Unrestricted	1960	
L24	SOHC	83	73.3	2380	Alum, Non-Crossflow	2	Unrestricted	2060	
KA24E	SOHC	89	96	2389	Alum, Crossflow	3	31mm SIR	2195	*For 2011-2012 only, may use 32mm chokes at 2280 lbs.*
KA24DE	DOHC	89	96	2389	Alum, Crossflow	4	31mm SIR	2195	
L26	SOHC	83	79	2565	Alum, Non-Crossflow	2	33mm SIR	2130	
L28	SOHC	86.1	79	2760	Alum, Non-Crossflow	2	33mm SIR	2130	
VG30	SOHC	86.1	83	2899	Alum, Crossflow	2	33mm SIR	2270	

GT3 Cars - PONTIAC

Model	Years	Body Style	Drive-line	Wheel-base (in)	Notes
Fiero	NA	2dr	RWD	93.4	May convert to front engine/rear wheel drive. If OEM engine location is used (rear engine) IRS weight penalty is waived. Air cleaner may protrude through engine hatch.

Engines - PONTIAC

Engine Family	Engine Type	Bore (mm)	Stroke (mm)	Disp. (cc)	Head Type	Valves / Cyl.	Fuel Induction	Weight (lbs)	Notes
	OHV	101.6	82.55	2677	Alum. Crossflow	2	33mm SIR	2270	

GT3 Cars - PORSCHE

Model	Years	Body Style	Drive-line	Wheel-base (in)	Notes
911 Coupe & Targa	-68	2dr	RWD	87.0 / 89.4	Windshield may be removed on Targa and a low front hoop may be fitted. Rear rim width: 8". Factory spoiler: #930-512-023-00 & 930-512-021-00 (or kit #930-512-901-01). No alternate materials or reproductions.
914	NA	2dr	RWD	96.5	Top panels may remain if securely bolted or pinned. Windshield may be removed and a low front hoop roll cage fitted. (75-76) bumpers allowed.
924	NA	2dr	RWD	94.5	
944	NA	2dr	RWD	94.5	
Boxster	NA	2dr	RWD	96.5	

Engines - PORSCHE

Engine Family	Engine Type	Bore (mm)	Stroke (mm)	Disp. (cc)	Head Type	Valves / Cyl.	Fuel Induction	Weight (lbs)	Notes
	OHV	94	70.9	1968	Alum. Crossflow	2	Unrestricted	1960	Cylinder barrels may be of alternate material. Alt. head: Type 1/Type 3. OEM 2-valve air cooled heads may be modified to utilize two (2) spark plugs per cylinder.
	SOHC	86.5	84.4	1984	Alum. Crossflow	2	Unrestricted	1960	Alt. Head: #933-104-302-50.
	SOHC	80	66	1991	Alum. Crossflow	2	Unrestricted	1960	OEM 2-valve air cooled heads may be modified to utilize two (2) spark plugs per cyl. Alt Head: 911-104-302-OR (w/ sealed injector port).
	SOHC	84	66	2195	Alum. Crossflow	2	Unrestricted	2060	OEM 2-valve air cooled heads may be modified to utilize two (2) spark plugs per cyl.
	SOHC	84	70.4	2341	Alum. Crossflow	2	Unrestricted	2130	
	SOHC	100	78.9	2478	Alum. Crossflow	2	33mm SIR	2270	Alt. 4 valve head: #944 104 013 03 w/ 31mm SIR @ 2270lbs .
	SOHC	104	78.9	2681	Alum. Crossflow	2	33mm SIR	2270	
	SOHC	90	70.4	2687	Alum. Crossflow	2	33mm SIR	2270	
	SOHC	100	88	2766	Alum. Crossflow	2	33mm SIR	2270	

	SOHC	92	70.4	2808	Alum. Crossflow	2	33mm SIR	2270	
	SOHC	95	70.4	2992	Alum. Crossflow	2	33mm SIR	2270	OEM 2-valve air cooled heads may be modified to utilize two (2) spark plugs per cyl.

GT3 Cars - SAAB

Model	Years	Body Style	Drive-line	Wheel-base (in)	Notes
900	-79	2dr	FWD	99.4	
99E, CM, EMS, GL, LE	NA	2, 4dr	RWD	97.4	

Engines - SAAB

Engine Family	Engine Type	Bore (mm)	Stroke (mm)	Disp. (cc)	Head Type	Valves / Cyl.	Fuel Induction	Weight (lbs)	Notes
	SOHC	87	78	1854	Alum. Crossflow	2	Unrestricted	1960	
	SOHC	90	78	1985	Alum. Crossflow	2	Unrestricted	1960	
	DOHC	90	78	1985	Alum. Crossflow	4	31mm SIR	2060	

GT3 Cars - SCION

Model	Years	Body Style	Drive-line	Wheel-base (in)	Notes
tC	-5	2dr	FWD	93.7	May use any class legal Toyota engine.

GT3 Cars - TOYOTA

Model	Years	Body Style	Drive-line	Wheel-base (in)	Notes
Celica	94-99	2dr	FWD	99.4	
Celica	00-05	2dr	FWD	102.4/93.7	
Celica Sport, Coupe GT, ST, Liftback GT	NA	2dr	FWD	98.3	
Corolla	NA	2, 4dr	FWD	94.5/102.4 / 93.7	
MR-2	-89	2dr	RWD	91.3	
MR-2	99-02	2dr	FWD	91.3	
Paseo	92-99	2dr	FWD	93.7	
Tercel	-91	4dr	FWD	95.3 / 93.7	

Engines - TOYOTA

Engine Family	Engine Type	Bore (mm)	Stroke (mm)	Disp. (cc)	Head Type	Valves / Cyl.	Fuel Induction	Weight (lbs)	Notes
4AG	DOHC	81	77	1587	Alum. Crossflow	4	Unrestricted	1855	
4AG	DOHC	81	85.5	1762	Alum. Crossflow	4	Unrestricted	1960	
5S	*DOHC*	*87*	*91*	*2164*	*Alum. Crossflow*	*4*	*31mm SIR*	*2130*	
7AFE	DOHC	81	85.5	1762	Alum. Crossflow	4	Unrestricted	1960	Alternate heads 11101-16010 and 11101-16030. *77mm stroke allowed at 1855 lbs. (must run identical deck height as 4AG block).*
	OHV	85	78	1770	Alum. Crossflow	2	Unrestricted	1855	2TG cyl. head allowed.

1ZZ	DOHC	79	91.5	1794	Alum. Crossflow	4	Unrestricted	1960	
2ZZ	DOHC	82	85	1796	Alum. Crossflow	4	Unrestricted	1960	
3S	SOHC	84.2	90.1	1998	Alum. Crossflow	2	Unrestricted	1960	
20R	SOHC	88.5	89	2189	Alum. Crossflow	2	Unrestricted	2060	
2AZ	DOHC	88.5	96	2362	Alum. Crossflow	4	31mm SIR	2195	
2RZ	DOHC	95	*86*	2438	Alum. Crossflow	4	31mm SIR	*2195*	Alt. head: #11101-75015.

GT3 Cars - TRIUMPH

Model	Years	Body Style	Drive-line	Wheel-base (in)	Notes
GT6, GT6+ & Mk III	-74	2dr	RWD	83	
TR-250 / TR-6	NA	2dr	RWD	88	Windshield may be removed and a low front hoop roll cage fitted.

Engines - TRIUMPH

Engine Family	Engine Type	Bore (mm)	Stroke (mm)	Disp. (cc)	Head Type	Valves / Cyl.	Fuel Induction	Weight (lbs)	Notes
	OHV	74.4	75.9	1998	Iron, Non-Crossflow	2	Unrestricted	1855	
	OHV	74.4	95	2498	Iron, Non-Crossflow	2	Unrestricted	2130	

GT3 Cars - VOLKSWAGEN

Model	Years	Body Style	Drive-line	Wheel-base (in)	Notes
Beetle	98-01	2dr	FWD	98.9	

Corrado	NA	3dr	FWD	97.3	
Golf & GTI	NA	3, 5dr	FWD	97.3 / 98.9	
Jetta	NA	4dr	FWD	97.3	
Rabbit	75-84	3, 5dr	FWD	94.5	
Scirocco	NA	3dr	FWD	94.5	

Engines - VOLKSWAGEN

Engine Family	Engine Type	Bore (mm)	Stroke (mm)	Disp. (cc)	Head Type	Valves / Cyl.	Fuel Induction	Weight (lbs)	Notes
	SOHC	79.5	86.4	1715	Alum, Non-Crossflow	2	Unrestricted	1805	*Alt. Heads: #026-103-373G, 049-103-351C, Eurospec Sports head at 1805 lbs.*
	SOHC	81	86.4	1780	Alum, Crossflow	2	Unrestricted	1855	*Alt. Heads: #026-103-373G, 049-103-351C, Eurospec Sports head at 1805 lbs.*
	DOHC	81	86.4	1780	Alum, Crossflow	4	Unrestricted	1960	
058, 06A, 06B	DOHC	81	86.4	1780	Alum, Crossflow	5	Unrestricted	1960	
	SOHC	82.5	92.8	1984	Alum, Crossflow	2	Unrestricted	1960	*Alt. Heads: #026-103-373G, 049-103-351C, Eurospec Sports head at 1855lbs.*
	DOHC	82.5	92.8	1984	Alum, Crossflow	4	31mm SIR	2060	

GT3 Cars - VOLVO

Model	Years	Body Style	Drive-line	Wheel-base (in)	Notes
122S	NA	2dr	RWD	102.5	
142 / 142E	NA	2dr	RWD	102.5	

242 / 244DL	NA	2dr	RWD	104					
S40	NA	4dr	FWD	100.4					
1800 E/S/ES	*NA*	*3dr*	*RWD*	*96.5*					

Engines - VOLVO

Engine Family	Engine Type	Bore (mm)	Stroke (mm)	Disp. (cc)	Head Type	Valves / Cyl.	Fuel Induction	Weight (lbs)	Notes
	OHV	88.9	80	1986	Iron, Non-Crossflow	2	Unrestricted	1855	
B20	SOHC	92	80	2127	Alum. Crossflow	2	Unrestricted	2060	
B21	SOHC	96	80	2320	Alum. Crossflow	2	Unrestricted	2130	

GTL Cars - Acura

Model	Years	Body Style	Drive-line	Wheel-base (in)	Notes
Integra	(-93)	2dr	FWD	96.5	May use any class legal Honda engine.
Integra	(94-)	2dr	FWD	101.2	May use any class legal Honda engine.
RSX	(02-05)	2dr	FWD	96.5 / 101.2	May use any class legal Honda engine.

GTL Cars - ALFA ROMEO

Model	Years	Body Style	Drive-line	Wheel-base (in)	Notes
GT-1300 Junior	NA	2dr	RWD	92.5	
GTA Junior	NA	2dr	RWD	92.5	
Alfetta GT	NA	2dr	RWD	94.5	
Guilia 1300	NA	2dr	RWD	98.8	
Guilia 1300 TI	NA	2dr	RWD	98.8	
GTV 1600	NA	2dr	RWD	92.5	
GTV 1750 / 2000	NA	2dr	RWD	92.5	
Giulietta Spider / Giulia Spider	NA	2dr	RWD	86.6 / 88.6	
all Spider models	(-94)	2dr	RWD	88.6	

Engines - ALFA

Engine Family	Engine Type	Bore x Stroke (mm)	Disp. (cc)	Head Type	Valves/ Cyl.	Fuel Induction	Weight (lbs)	Notes
	DOHC	78.0 x 67.5	1130	Alum, Crossflow	2	Unrestricted	*1605*	
	DOHC	74.0 x 75.0	1290	Alum, Crossflow	2	Unrestricted	*1605*	

	DOHC	80.0 x 67.5	1357	Alum, Crossflow	2	Unrestricted	1605	
	DOHC	78.0 x 82.0	1570	Alum, Crossflow	2	24.5mm SIR	1935	
	DOHC	80.0 x 75.0	1508	Alum, Crossflow	2	24.5mm SIR	1905	
	DOHC	80.0 x 88.5	1779	Alum, Crossflow	2	24mm SIR	2040	Alt. head: 19510-01053-04 (twin plug).

GTL Cars - AMC

Model	Years	Body Style	Drive-line	Wheel-base (in)	Notes
AMC/Renault Alliance	NA	3dr	FWD	93.5	
AMC/Renault Encore	NA	2dr	FWD	93.5	

Engines - AMC/Renault

Engine Family	Engine Type	Bore x Stroke (mm)	Disp. (cc)	Head Type	Valves/ Cyl.	Fuel Induction	Weight (lbs)	Notes
	OHV	73.0 x 77.0	1289	Alum, Crossflow	2	Unrestricted	1660	Alternate crossflow head #7700597627.
	OHV	76.0 x 77.0	1397	Alum, Crossflow	2	24.5mm SIR	1850	Alternate crossflow head #7700597627.

GTL Cars - BLMI

Model	Years	Body Style	Drive-line	Wheel-base (in)	Notes
Austin-Healey Sprite	NA	2dr	RWD	80.0	
MG Midget	NA	2dr	RWD	80.0	
Mini Cooper	NA	2dr	FWD	80.2	
Austin America	NA	2dr	FWD	93.5	
BMW Mini	2002-	2dr	FWD	97.1	
Triumph Spitfire	NA	2dr	RWD	83.0	

Engines - BLMI

Engine Family	Engine Type	Bore x Stroke (mm)	Disp. (cc)	Head Type	Valves/ Cyl.	Fuel Induction	Weight (lbs)	Notes
	OHV	62.992 x 76.2	948	Iron, non-Crossflow	2	Unrestricted	*1160*	RWD *Mini* add 50 lbs.
	OHV	70.6 x 61.91	970	Iron, non-Crossflow	2	Unrestricted	*1185*	RWD *Mini* add 50 lbs. Reduce by 100 lbs with original suspension and 10" wheels. Front and rear body seams may be removed. *Pierce aluminum cylinder head part #99003.843 allowed.*
	OHV	70.6 x 68.26	1071	Iron, non-Crossflow	2	Unrestricted	*1280*	RWD *Mini* add 50 lbs. Reduce by 100 lbs with original suspension and 10" wheels. Front and rear body seams may be removed. *Pierce aluminum cylinder head part #99003.843 allowed.*
	OHV	64.516 x 83.82	1098	Iron, non-Crossflow	2	Unrestricted	*1330*	RWD *Mini* add 50 lbs.
	OHV	69.34 x 76.2	1147	Iron, non-Crossflow	2	Unrestricted	*1530*	*RWD Mini add 50 lbs.*
	OHV	2.78 x 3.20 (70.6 x 81.33) alt. bore: 73.5 max. or 74.0 max.	1275 1380 1399	Iron, non-Crossflow	2	Unrestricted	1275@*1520* 1380@*1600* 1399@*1660* Sprite/ Midget 1275@*1680* 1380@*1760* 1399@*1820*	RWD *Mini* add 50lbs. Roll cage meeting requirements for cars under 1500lbs are acceptable for cars registered prior to 1/1/82. Reduce by 100 lbs with original suspension and 10" wheels. Front and rear body seams may be removed. *Pierce aluminum cylinder head part #99003.843 allowed.*
	OHV	73.66 x 75.997	1296	Iron, non-crossflow	2	Unrestricted	*1680*	RWD *Mini* add 50 lbs.
	OHV	73.66 x 87.376	1493	Iron, non-crossflow	2	25mm SIR	*1895*	RWD *Mini* add 50 lbs.
W10B16	SOHC	77.0 x 85.8	1598	Alum, Crossflow	4	*23*mm SIR	*1950*	

GTL Cars - BMW

Model	Years	Body Style	Drive-line	Wheel-base (in)	Notes
1600-2 / 1602	NA	2dr	RWD	98.5	

Engines - BMW

Engine Family	Engine Type	Bore x Stroke (mm)	Disp. (cc)	Head Type	Valves/ Cyl.	Fuel Induction	Weight (lbs)	Notes
	SOHC	84.0 x 71.0	1573	Alum, Crossflow	2	*24.5*mm SIR	*1935*	

GTL Cars - DODGE

Model	Years	Body Style	Drive-line	Wheel-base (in)	Notes
Colt Coupe	NA	2dr	FWD	96.0	Mitsubishi bodywork allowed.
Omni	NA	2dr	FWD	99.2	
024	1978	2dr	FWD	96.7	

Engines - DODGE

Engine Family	Engine Type	Bore x Stroke (mm)	Disp. (cc)	Head Type	Valves/ Cyl.	Fuel Induction	Weight (lbs)	Notes
	SOHC	79.0 x 86.0	1597	Alum, Crossflow	2	*24.5*mm SIR	*1950*	
	SOHC	79.5 x 86.4 alt. bore: 81.0	*1715* *1781* *1715* *1781*	*Alum, non-Crossflow* *Alum. Crossflow*	2	*24.5mm SIR* *24/5mm SRI* *24mm SIR* *24mm SIR*	*2010* *2040* *2010* *2040*	

GTL Cars - FIAT

Model	Years	Body Style	Drive-line	Wheel-base (in)	Notes
124 Sport Coupe	NA	2dr	RWD	95.3	
124 Special	NA	2dr	RWD	95.3	
128 Coupe	NA	2dr	FWD	87.5	
128	NA	2dr	FWD	96.4	

131 Coupe	NA	2dr	RWD	98.0	
131 Sedan	NA	4dr	RWD	98.0	
X19	NA	2dr	RWD	86.7	

Engines - FIAT

Engine Family	Engine Type	Bore x Stroke (mm)	Disp. (cc)	Head Type	Valves/ Cyl.	Fuel Induction	Weight (lbs)	Notes
	SOHC	80.0 x 55.5	1116	Alum, Non-Crossflow	2	Unrestricted	*1365*	
	SOHC	86.0 x 55.5	1290	Alum, Non-Crossflow	2	Unrestricted	*1595*	Roll cage meeting requirements for cars under 1500 lbs are acceptable for cars registered prior to 1/1/82.
1300 w/ 1500 block	SOHC	86.0 x 55.5	1290	Alum, Non-Crossflow	2	Unrestricted	*1620*	
	OHV	80.0 x 71.5	1438	Alum, Non-Crossflow	2	25mm SIR	*1870*	
	SOHC	86.4 x 64.0	1498	Alum, Non-Crossflow	2	25mm SIR	*1900*	
	DOHC	80.0 x 79.2	1592	Alum, Crossflow	2	*24.5*mm SIR	*1945*	
	DOHC	80.0 x 80.0	1608	Alum, Crossflow	2	*24.5*mm SIR	*1955*	
	DOHC	84.0 x 79.2	1756	Alum, Crossflow	2	*24*mm SIR	*2040*	

GTL Cars - FORD

Model	Years	Body Style	Drive-line	Wheel-base (in)	Notes
Anglia Super	NA	2dr	RWD	90.5	
Cortina GT	64-68	2dr	RWD	98.0	
Escort Super	68-74	2dr	RWD	96.0	
Escort Lynx, EXP, LN7	81-90 1982	2dr	FWD	94.2	

Escort Mexico	70-74	2dr	RWD	96.0	
Fiesta	78-80	2dr	FWD	90.0	
Pinto	NA	2dr	RWD	94.0	Non-tube frame track: (F&R) 60.52”

Engines - FORD

Engine Family	Engine Type	Bore x Stroke (mm)	Disp. (cc)	Head Type	Valves/ Cyl.	Fuel Induction	Weight (lbs)	Notes
	OHV	3.19 x 2.29	1198	Iron, Non-crossflow	2	Unrestricted	*1550*	Alternate 1500cc Block: casting # 27333E6015 @ +23 lbs.
	OHV	3.19 x 2.48	1297	Iron, Non crossflow	2	Unrestricted	*1550*	Alternate 1500cc Block: casting # 27333E6015 w/ 23 lb penalty, 1600cc block w/ 25 lb penalty. Any Formula F cyl. head may be used, including aluminum version w/ 75 lb. penalty.
	OHV	81.0 x 73.2	1499	Iron, Non crossflow	2	25mm SIR	*1900*	
	DOHC	78.0 x 83.6	1597	Alum Crossflow	4	*23*mm SIR	*1950*	
	OHV	81.0 x 77.5	1598	Iron, Crossflow	2	*24.5*mm SIR	*1950*	Any Formula F cylinder head may be used, including aluminum version.
	SOHC	80.0 x 79.5	1598	Alum, Crossflow	2	*24.5*mm SIR	*1950*	
Zetec	DOHC	80.6 x 88.0	1796	Alum, Crossflow	4	*22.5*mm SIR	2050	Alt. 2.0L cyl block may be sleeved to specified bore size.
	DOHC	83.0 x 85.0	1839	Alum Crossflow	4	*22.5*mm SIR	*2070*	

GTL Cars - HONDA

Model	Years	Body Style	Drive-line	Wheel-base (in)	Notes
Civic	73-79	3dr	FWD	86.6	
Civic	80-87	3dr	FWD	88.6	

CRX	84-87	3dr	FWD	86.6	Hood bulge permitted, no openings. May mount wing per hatchback-station wagon spec*, but no part of the wing assembly may be above the highest point of the roof.*
Civic	84-87	2dr, 3dr	FWD	93.7	Hood bulge permitted, no openings.
Civic	84-87	4dr	FWD	96.5	Hood bulge permitted, no openings.
CRX	88-91	3dr	FWD	90.6	Hood bulge permitted, no openings. May mount wing per hatchback-station wagon specs*, but no part of the wing assembly may be above the highest point of the roof.*
Civic	88-91	3dr	FWD	98.4	Hood bulge permitted, no openings.
Civic	92-95	2dr	FWD	103.2	Hood bulge permitted, no openings.

GTL Cars - HONDA

Model	Years	Body Style	Drive-line	Wheel-base (in)	Notes
Civic Del Sol	93-97	2dr	FWD	93.3	
Civic	96-06	2dr	FWD	103.2	Hood bulge permitted, no openings.
Civic	06-09	2dr	FWD	104.3	

Engines - HONDA

Engine Family	Engine Type	Bore x Stroke (mm)	Disp. (cc)	Head Type	Valves/ Cyl.	Fuel Induction	Weight (lbs)	Notes
EB	SOHC	70.0 x 76.0	1170	Alum, Crossflow	2	Unrestricted	*1590*	Alt heads: #12100-634-000.
EB	SOHC	72.0 x 76.0	1237	Alum, Crossflow	2	Unrestricted	*1675*	Alt heads: #12100-634-000.
EN	SOHC	72.0 x 82.0	1335	Alum, Crossflow	3	*23*mm SIR	*1820*	Alt. Heads: #12100-PB9-000 (2 valve, Crossflow w/ unrestricted fuel induction *at 1719 lbs*), 12100-PA1-000.
EW	SOHC	74.0 x 78.0	1342	Alum, Crossflow	3	*23*mm SIR	*1820*	Alt. Heads: #12100-PE3-000 or 12100-PE7-000.
EW	SOHC	74.0 x 86.5	1488	Alum, Crossflow	3	*23*mm SIR	*1895*	Alt. Heads: #12100-PE3-000 or 12100-PE7-000.
D15	SOHC	75.0 x 84.5	1493	Alum, Crossflow	4	*23*mm SIR	*1895*	
D16	SOHC	75.0 x 90.0	1590	Alum, Crossflow	4	*23*mm SIR	*1945*	

D16A	DOHC	75.0 x 90.0	1590	Alum, Crossflow	4	*23*mm SIR	*1945*	
B16A	DOHC	81.0 x 77.4	1595	Alum, Crossflow	4	*23*mm SIR	*1950*	
B18	DOHC	81.0 x 87.2 81.0 x 89.0	1797 1834	Alum, Crossflow	4	*22.5*mm SIR	2050 *2065*	
Fit	DOHC	73.0 x 89.4	1497	Alum Crossflow	4	*23*mm SIR	*1900*	

GTL Cars - LANCIA

Model	Years	Body Style	Drive-line	Wheel-base (in)	Notes
Scorpion	76-77	2dr	RWD	90.5	Trunk mounted fuel cell is permitted. Fabric roof panel may be replaced with alternate material. Non-tuve frame track (R) 61.5".

Engines - LANCIA

Engine Family	Engine Type	Bore x Stroke (mm)	Disp. (cc)	Head Type	Valves/ Cyl.	Fuel Induction	Weight (lbs)	Notes
	DOHC	84.0 x 79.2	1756	Alum, Crossflow	2	*24*mm SIR	*2030*	

GTL Cars - LOTUS

Model	Years	Body Style	Drive-line	Wheel-base (in)	Notes
Cortina	64-66	2dr	RWD	97.5	
Cortina	67	2dr	RWD	98.0	
Elan S2, S4 (Rdstr, Cpe, Drphead)	NA	2dr	RWD	84.0	Windshield may be removed and a low front hoop roll cage may be fitted.
Europa		2dr	RWD	91.0	

Engines - LOTUS

Engine Family	Engine Type	Bore x Stroke (mm)	Disp. (cc)	Head Type	Valves/ Cyl.	Fuel Induction	Weight (lbs)	Notes

	DOHC	82.6 x 73.0	1558	Alum, Crossflow	2	24.5mm SIR	1930	Alternate cylinder heads allowed: Ford 1500 Non-crossflow and Ford 1600 crossflow (including aluminum version)

GTL Cars - MAZDA

Model	Years	Body Style	Drive-line	Wheel-base (in)	Notes
Protégé	1999	2dr	FWD	96.5/98.4/ 102.8	Rotary engine setback from the front spindle centerline to the front spark plug is 4.5".
Protégé 5	2002	5dr	FWD	96.3/102.8	OEM roof spoiler is permitted (P/N:B25T-51-960C-XX, "XX"=color code) Engine setback from the front spindle centerline to the front spark plug is 4.5
GLC	NA	2dr	FWD	93.1/98.4	Rotary engine setback from the front spindle centerline to the front spark plug is 4.5".
MX-3	92-94	2dr	FWD	91.1/96.3	Rotary engine setback from the front spindle centerline to the front spark plug is 4.5".
MX-5 / Miata	90-05	2dr	RWD	89.2	Rotary engine setback from the front spindle centerline to the front spark plug is 4.5".
MX-5	06-09	2dr	RWD	91.7	Rotary engine setback from the front spindle centerline to the front spark plug is 4.5".
323	88-91	2dr	FWD	94.5	Rotary engine setback from the front spindle centerline to the front spark plug is 4.5".
3		2dr	FWD	97.0	Rotary engine setback from the front spindle centerline to the front spark plug is 4.5".
RX-3		2dr	RWD	91.0	
RX-7		2dr	RWD	95.3, 95.5, 95.7	Non-tube frame track (F) 60.7" (R) 60.3".

Engines - MAZDA

Engine Family	Engine Type	Bore x Stroke (mm)	Disp. (cc)	Head Type	Valves/ Cyl.	Fuel Induction	Weight (lbs)	Notes
	SOHC	73.0 x 76.0	1272	Alum, Crossflow	2	Unrestricted	1680	1500cc block and head w/1300 (1365)cc crankshaft (#E301-11-301 or equivalent) is permitted. Alt. head: # E515-10-100B.
	SOHC	77.0 x 69.6	1296	Alum, Crossflow	2	Unrestricted	1645	1500cc block and head w/1300 (1365)cc crankshaft (#E301-11-301 or equivalent) is permitted. Alt. head: # E515-10-100B.
	SOHC	77.0 x 80.0	1490	Alum, Crossflow	2	24.5mm SIR	1895	Alt. Head: #E515-10-100B.

	SOHC	78.0 x 83.6	1597	Alum, Crossflow	2	*24.5*mm SIR	*1950*	
	DOHC	78.0 x 83.8	1597	Alum, Crossflow	4	*23*mm SIR	*1900*	
	DOHC	83.0 x 85.0	1839	Alum, Crossflow	4	*22.5*mm SIR	*2070*	
12A	Street Port		2292			27mm SIR	*2000*	

GTL Cars - NISSAN

Model	Years	Body Style	Drive-line	Wheel-base (in)	Notes
PL510	68-73	2dr, 4dr	RWD	95.3	
1200 (B110)	70-73	2dr	RWD	90.6	
B210	74-78	2dr, 3dr, 4dr	RWD	92.1	
210 (B310)	79-82	2dr, 3dr, 4dr	RWD	92.1 or 94.2	
SPL 311/311U	NA	2dr	RWD	89.9/95.7	
Pulsar (N12)	83-86	3dr	FWD	95.1	
Pulsar (KN13)	87-90	3dr	FWD	95.1	
Sentra (B11)	82-85	2dr, 3dr, 4dr	FWD	94.5	
Sentra (B12)	86-90	2dr, 3dr, 4dr	FWD	94.5	
Sentra (B13)	91-94	2dr, 4dr	FWD	95.7	
200SX SE-R (B14)	95-97	2dr	FWD	95.7 or 99.8	
240SX (S13/S14)	NA	2dr	RWD	97.5	
Sentra SE-R (B15U)	2002	4dr	FWD	95.7 or 99.8	

Engines - NISSAN

Engine Family	Engine Type	Bore x Stroke (mm)	Disp. (cc)	Head Type	Valves/ Cyl.	Fuel Induction	Weight (lbs)	Notes
A12	OHV	73.0 x 70.0 alt. bore: 75.2 max.	1171	Alum, Non-crossflow	2	Unrestricted	*1550* (*1590* w/ alt. bore)	Alt heads: #11041-H2303, 11041-H5704, 11041-H9204.
A12A	OHV	75.0 x 70.0 alt. bore: 77.2 max.	1237	Alum, Non-crossflow	2	Unrestricted	*1645* (*1685* w/ alt. bore)	Alt heads: #11041-H2303, 11041-H5704, 11041-H9204. 1237cc with A14 Block @1716 lbs.
A12A w/A14 Block	OHV	75.0 x 70.0 alt. bore: 77.2 max.	1237	Alum, Non-crossflow	2	Unrestricted	*1665* (*1705* w/ alt. bore)	Alt heads: #11041-H2303, 11041-H5704, 11041-H9204.
A13	OHV	73.0 x 77.0 alt. bore: 75.2 max.	1288	Alum, Non-crossflow	2	Unrestricted	*1720* (*1760* w/ alt. bore)	Alt heads: #11041-H2303, 11041-H5704, 11041-H9204.
A14	OHV	76.0 x 77.0	1397	Alum, Non-crossflow	2	25mm SIR	*1850*	Alt heads: #11041-H2303, 11041-H5704, 11041-H9204.
A15	OHV	76.0 x 82.0	1488	Alum, Non-crossflow	2	25mm SIR	*1895*	Alt heads: #11041-H2303, 11041-H5704, 11041-H9204.
E15	SOHC	76.0 x 82.0	1488	Alum, Crossflow	2	*24.5*mm SIR	*1895*	Alt head: #11041-15M00.
E16	SOHC	76.0 x 88.0	1597	Alum, Crossflow	2	*24.5*mm SIR	*1950*	Alt heads: #11041-15M00, 11041-17M00.
GA16	DOHC	76.0 x 88.0	1597	Alum, Crossflow	4	*23*mm SIR	*1950*	
L16	SOHC	83.0 x 73.7	1595	Alum, Non-crossflow	2	25mm SIR	*1950*	Alt Heads: #11041-22010, 11041-U0600A, 11041-U0602-SV, 11041-N7120, 11041-21901.
SR16VE	DOHC	86.0 x 68.7	1596	Alum, Crossflow	4	*23*mm SIR	*1950*	Alt. Heads: #11040-1N591.
QG18DE	DOHC	80.0 x 88.0	1769	Alum, Crossflow	4	*22.5*mm SIR	*2035*	
L18	SOHC	85.0 x 78.0	1770	Alum, Non-Crossflow	2	*24.5*mm SIR	*2035*	#11041-22010, 11041-U0600-A, 11041-U0602-SV, 11041-21901, 11041-N7120.
MR18DE	DOHC	84.0 x 81.1	1797	Alum. Crossflow	4	*22.5*mm SIR	2050	

CA18	SOHC	83.0 x 83.6	1809	Alum, Crossflow	2	*24*mm SIR	*2055*	
CA18DE	DOHC	83.0 x 83.6	1809	Alum, Crossflow	4	*22.5*mm SIR	*2055*	

GTL Cars - OPEL

Model	Years	Body Style	Drive-line	Wheel-base (in)	Notes
1900	1995	2dr	RWD	95.7	
Mk 51		2dr	RWD	95.7	
Mk 53		2dr	RWD	95.7	
Sport Coupe Rallye		2dr	RWD	95.7	
Mk 57R		2dr	RWD	95.7	
Sport Coupe		2dr	RWD		
Mk 77		2dr	RWD	95.7	
GT 1900	1995	2dr	RWD	95.7	

Engines - OPEL

Engine Family	Engine Type	Bore x Stroke (mm)	Disp. (cc)	Head Type	Valves/ Cyl.	Fuel Induction	Weight (lbs)	Notes
	SOHC	93.0 x 69.9	1897	Iron, Non-crossflow	2	*24.5*mm SIR	*2100*	

GTL Cars - PORSCHE

Model	Years	Body Style	Drive-line	Wheel-base (in)	Notes
914-4		2dr	RWD	96.5	

Engines - PORSCHE

Engine Family	Engine Type	Bore x Stroke (mm)	Disp. (cc)	Head Type	Valves/ Cyl.	Fuel Induction	Weight (lbs)	Notes
	OHV	93.0 x 66.0	1795	Alum, Crossflow	2	24mm SIR	2050	Material may be added as required only to relocate spark plug hole as per 2.0L head. Alum crossflow head from 2.0L may be utilized.
	OHV	90.0 x 66.0	1679	Alum, Crossflow	2	24mm SIR	1990	Material may be added as required only to relocate spark plug hole as per 2.0L head. Alum crossflow head from 2.0L may be utilized.

GTL Cars - RENAULT

Model	Years	Body Style	Drive-line	Wheel-base (in)	Notes
R5	NA	2dr	FWD	94.6	Left Hand Drive Wheelbase - 95.8.
R1228	1978	2dr	FWD	96.6	Left Hand Drive Wheelbase - 95.8.
LeCar	78-79	2dr	FWD	94.6	Left Hand Drive Wheelbase - 95.8. (Firewall modifications permitted with use of alt. head.) Removal only of rain rail permitted, no modification.

GTL Cars - SAAB

Model	Years	Body Style	Drive-line	Wheel-base (in)	Notes
Sedan	-1964	4dr	FWD	98.4	
Sonnet	NA	2dr	FWD	84.6	
Sonnet III	NA	2dr	FWD	84.6	

Engines - SAAB

Engine Family	Engine Type	Bore x Stroke (mm)	Disp. (cc)	Head Type	Valves/ Cyl.	Fuel Induction	Weight (lbs)	Notes
	OHV	89.9 x 58.9	1496	Iron, crossflow	2	24.5mm SIR	1900	Intake manifold: #379050.
	OHV	89.9 x 66.8	1696	Iron, crossflow	2	24mm SIR	2000	Intake manifold: #379050.

GTL Cars - SCION

Model	Years	Body Style	Drive-line	Wheel-base (in)	Notes
Xa	(05-06)	5dr	FWD	93.3	May use any class legal Toyota engine.

GTL Cars - SUBARU

Model	Years	Body Style	Drive-line	Wheel-base (in)	Notes
GL Coupe	NA	2dr	FWD	96.6	CVT transmission prohibited.
Justy (2WD)	88-94	2dr	FWD	89.9	CVT transmission prohibited.

Engines - SUBARU

Engine Family	Engine Type	Bore x Stroke (mm)	Disp. (cc)	Head Type	Valves/ Cyl.	Fuel Induction	Weight (lbs)	Notes
	SOHC	78.0 x 83.0	1189	Alum, Crossflow	3	Unrestricted	*1545*	
	OHV	3.23 x 2.36	1267	Alum, Non-crossflow	2	Unrestricted	*1675*	

GTL Cars - SUZUKI

Model	Years	Body Style	Drive-line	Wheel-base (in)	Notes
Swift	89-94	2dr	FWD	89.2	
Swift	89-94	4dr	FWD	93.1	
Swift	95-01	2dr	FWD	93.1	

Engines - SUZUKI

Engine Family	Engine Type	Bore x Stroke (mm)	Disp. (cc)	Head Type	Valves/ Cyl.	Fuel Induction	Weight (lbs)	Notes
	DOHC	74.0 x 75.5	1299	Alum, Crossflow	4	*23*mm SIR	*1800*	

GTL Cars - TOYOTA

Model	Years	Body Style	Drive-line	Wheel-base (in)	Notes
Celica	00-05	2dr	FWD	102. 4 or 93.7	
Corolla 1200	NA	2dr	RWD	90.0 or 91.9	Rollcage meeting requirements for cars under 1500lbs are acceptable for cars registered prior to 1/1/82
Corolla SR-5	-74	2dr	RWD	91.9	
Corolla SR-5	75	2dr	RWD	93.3	
Corolla Sport Coupe & Lift Back	76-79	2dr, 3dr, 4dr		93.3	
Corolla	80-83	2dr, 3dr	RWD	94.5	
Corolla	84	2dr, 3dr, 4dr	RWD	90.6	
Corolla Sport / Sport Coupe (8V)	84-87	2dr, 3dr	RWD	94.5	
Corolla SR-5 / Sport Coupe	88	2dr	FWD	95.7	
MR2	91-95	2dr	RWD	91.3	Hood bulge allowed.
Starlet	81	3dr	RWD	90.6	
Tercel	91-	2dr, 3dr	FWD	93.7	
Paseo	92-99	3dr	FWD	93.7	

Engines - TOYOTA

Engine Family	Engine Type	Bore x Stroke (mm)	Disp. (cc)	Head Type	Valves/ Cyl.	Fuel Induction	Weight (lbs)	Notes
3K	OHV	75.0 x 66.0	1166	Alum, Non-Crossflow	2	Unrestricted	*1610*	
4K	OHV	75.0 x 73.0	1290	Alum, Non-Crossflow	2	Unrestricted	*1645*	
	OHV	77.5 x 77.0	1452	Alum, Non-Crossflow	2	25mm SIR	*1875*	

5K	OHV	80.5 x 73.0	1486	Alum, Non-Crossflow	2	25mm SIR	*1895*	
4A-C/L/LC	SOHC	81.0 x 77.0	1587	Alum, Non-Crossflow	2	25mm SIR	*1945*	
4AG	DOHC	81.0 x 77.0	1587	Alum, Crossflow	4	*23*mm SIR	*1945*	
2ZZ	DOHC	82.0 x 85.0	1796	Alum. Crossflow	4	*22.5*mm SIR	2050	
2T-C	OHV	85.0 x 70.0	1588	Alum, Crossflow	2	*24.5*mm SIR	*1945*	
7AFE	DOHC	81.0 x 85.4	1762	Alum, Crossflow	4	*22.5*mm SIR	*2030*	Alternate heads 11101-16010 and 11101-16030. *77mm alternate stroke permitted at 2040 lbs.*
1ZZ	DOHC	79.0 x 91.5	1794	Alum, Crossflow	4	*22.5*mm SIR	*2045*	
3TC	OHV	85.0 x 78.0	1770	Alum, Crossflow	2	*24*mm SIR	*2035*	

GTL Cars - VOLKSWAGEN

Model	Years	Body Style	Drive-line	Wheel-base (in)	Notes
1300/1500/ 1600 (Bug)	65-69	2dr	rear engine	94.5	
1600 (Bug) / Super Beetle	70-77	2dr	rear engine	95.3	
Rabbit	75-84	3dr, 5dr	FWD	94.5	
Scirocco		3dr	FWD	94.5	
Corrado		3dr	FWD	94.5	
Golf	85-	3dr, 5dr	FWD	94.5	
Golf Mark - IV		3dr, 5dr	FWD	98.9	
Jetta Mark - IV		4dr	FWD	98.2	
Beetle	98-01	3dr	FWD		
Cabriolet	75-84	3dr	FWD	94.5	

Engines - VOLKSWAGEN

Engine Family	Engine Type	Bore x Stroke (mm)	Disp. (cc)	Head Type	Valves/ Cyl.	Fuel Induction	Weight (lbs)	Notes
air cooled, flat 4	OHV	77.0 x 69.0	1285	Alum, Non-Crossflow	2	Unrestricted	1520	Siamesed intake port.
air cooled, flat 4	OHV	77.0 x 69.0	1285	Alum, Non-Crossflow	2	Unrestricted	1615	Dual intake port.
air cooled, flat 4	OHV	83.0 x 69.0	1493	Alum, Crossflow	2	24.5mm SIR	1895	Alt. Heads: #043-101-375H.
air cooled, flat 4	OHV	85.5 x 69.0	1584	Alum, Crossflow	2	24.5mm SIR	1940	Alt. Heads: #043-101-375H.
water cooled	SOHC	79.5 x 73.4	1457	Alum, non-crossflow	2	25mm SIR	1880	
water cooled	SOHC	76.5 x 80.0	1471	Alum, Non-Crossflow	2	25mm SIR	1885	Alt. Heads: #026-103-373G, 049-103-351C, Eurospec Sports head.
water cooled	SOHC	79.5 x 80.0	1588	Alum, Non-Crossflow	2	25mm SIR	1945	Alt. Heads: #026-103-373G, 049-103-351C, Eurospec Sports head.
air cooled	OHV	90.0 x 66.0	1679	Alum, Crossflow	2	24mm SIR	1990	Alt. Heads: #043-101-375-H.
water cooled	SOHC	79.5 x 86.4	1715	Alum, Non-Crossflow	2	24.5mm SIR	2010	Alt. Eurospec cyl. head may be used.
water cooled	SOHC	81.0 x 86.4	1780	Alum, Non-Crossflow	2	24.5mm SIR	2040	Alt. Eurospec cyl. head may be used.
water cooled	DOHC	81.0 x 86.4	1780	Alum, Crossflow	4	22.5mm SIR	2040	
058, 06A and 06B	DOHC	81.0 x 86.4	1780	Alum Crossflow	5	22.5mm SIR	2040	
air cooled	OHV	93.0 x 66.0	1795	Alum, Crossflow	2	24mm SIR	2050	Alt. Heads: #043-101-375-H.

Notes:

9.1.3. IMPROVED TOURING CATEGORY

These specifications are part of the SCCA GCR and all automobiles shall conform with GCR Section 9.

A. PURPOSE

Improved Touring classes are intended to provide the membership with the opportunity to compete in low cost cars with limited modifications, suitable for racing competition. To that end, cars will be models, as offered for sale in the United States. They will be prepared to manufacturer's specifications except for modifications permitted by these rules.

Cars from the previous four (4) model years and the current model year will not be eligible. No car older than a 1968 model of any listed vehicle will be accepted for Improved Touring competition. Turbocharged/Supercharged cars are not eligible for Improved Touring competition. Cars need not be eligible for state license or registration.

B. INTENT

It is the intent of these rules to restrict modifications to those useful and necessary to construct a safe race car. This class is intended to allow a variety of popular, inexpensive cars to be eligible; however, those determined by the Club to be outside of these parameters will not be classified. Entrants shall not be guaranteed the competitiveness of any car, and competition adjustments, other than as outlined in section 9.1.3.C, are not allowed. Other than those specifically allowed by these rules, no component or part normally found on a stock example of a given vehicle may be disabled, altered, or removed.

Note: This new statement of purpose and intent eliminates the dual purpose version which does not accurately reflect the current IT technology. In addition, it emphasizes the philosophy that we will give you a place to race your car and have fun, but not guarantee that you will be competitive.

C. SPECIFICATIONS

The SCCA shall publish the Improved Touring Category Specifications (ITCS) containing the officially recognized specifications for each car eligible to compete in the Improved Touring Category during the calendar year.

To maintain the stock basis of Improved Touring, updating and/or backdating of components is only permitted within cars of the same make, model, body type (e.g., sedan, station wagon, convertible, etc.), and engine size as listed on a single Improved Touring Specification Line. Any updated/backdated components shall be substituted as a complete assembly (engine long block, transmission/transaxle, induction system, differential/axle housing). No interchange of parts between assemblies is permitted, and all parts of an assembly shall be as originally produced for that assembly (such parts may, however, be coated, painted or plated). Additionally, it is not permitted to "create" a model or type of car by updating or backdating assemblies. Parts or assemblies which the manufacturer lists in factory service manuals or parts guides for a particular model which supersede or replace original parts or assemblies are permitted. Documentation of the superseding parts or assemblies must be supplied to the Club Racing Department and the appropriate part numbers listed on that particular model's specification line.

Stock replacement parts may be obtained from sources other than the manufacturer provided they are the exact equivalent of the original parts. The intent of this rule is to allow the competitor to obtain replacement

parts from standard industry outlets, e.g., auto-parts distributors, rather than from the manufacturer. It is not intended to allow parts that do not meet all dimensional and material specifications of new parts from the manufacturer.

To establish the originality and configuration of the vehicle, each driver/entrant shall have a factory shop manual for the specific make, model, and year of the automobile. This manual shall be presented when so requested at any technical inspection. If the factory shop manual is no longer available from the vehicle manufacturer, an aftermarket shop manual will be accepted with proof of non-availability from the vehicle manufacturer. The proof of legality shall rest upon the protestor and/or protestee.

During the initial vehicle classification process, the Club shall assess vehicle performance factors such as – but not limited to – manufacturer's published specifications for engine type, displacement, horsepower, and torque; vehicle weight; brake type and size; suspension design; and aerodynamic efficiency. Based only on such clearly measurable physical factors, a minimum allowable weight shall be established. At the end of the second, third, and fourth full years of classification, the vehicle's racing performance relative to other vehicles in its class shall may be evaluated. If the Club deems that, in the interest of fostering greater equity within a class, a vehicle should be reclassified to another Improved Touring class, such a reclassification may be made. Alternatively or additionally, if the Club deems that an upward or downward revision in the minimum allowable weight is warranted, such an adjustment may be made. At the end of a vehicle's fourth full year of Improved Touring classification, the vehicle's minimum weight shall be established.

Cars with weights assigned prior to 1/1/2005 may have their weights reassigned using the same process that is used for new listings. Should this occur, the assessment clock will start anew. Racing history of this particular model may be considered at this time and an adjustment may be included in the new minimum weight, and the adjustment may be reconsidered at the end of any of the first four full years of competition.

If at any time an error is discovered in the physical factors used to assess a vehicle's weight or an error was made during the application of the weight-assignment process, the error may be corrected. Should such an error correction occur, the assessment clock will start anew. Racing history of this particular model may be considered at this time and a performance compensation adjustment may be included in the new minimum weight, and the racing history of this model may be evaluated for an adjustment at the end of any of the first four full years of competition after the correction is made.

On rare occasion—and only after careful review of the actual racing performance of a particular make/model/year of vehicle—the Club may reclassify a vehicle, revise a vehicle's minimum allowable weight, and/or in the most extreme situation an intake restrictor may be required. Such an action shall be taken solely for the purpose of restoring equity within the vehicle's class.

D. AUTHORIZED MODIFICATIONS

The following modifications are authorized on all Improved Touring Category cars. Modifications shall not be made unless authorized herein. No permitted component/modification shall additionally perform a prohibited function.

1. Reciprocating Engines (only)

a. Any carburetor jets, needles, and/or metering rods may be

used in the stock or approved optional carburetor(s). Alternate needle valves are permitted. Removable jets may be replaced or resized. The number of carburetors may not be changed from standard. No venturi (including secondary or auxiliary) of any carburetor may be modified in any way.

1. Certain cars have optional carburetors listed. On these cars, adaptor(s) may be used to mount the optional carburetor(s), provided the adaptor serves no performance function, i.e., plenum chamber, etc.

2. External throttle linkage to the standard or optional carburetor(s) may be modified or changed. Choke mechanisms, plates, rods, and actuating cables, wires, or hoses may be removed. Method of operating the secondary throttle may not be modified.

3. The original, standard intake manifold shall be maintained. No porting or polishing of the manifold is permitted except as allowed by rule D.1.l.

4. All air entering the intake tract shall pass through the carburetor or fuel injection air inlet. *All air must also pass through the stock air metering device, eg MAF, or AFM, etc if so equipped.* Air intake source shall be within the confines of the engine compartment or stock location.

5. All single carbureted cars may fit an approved optional carburetor. Approved optional carburetors are:

   1 Weber 32 DGV/DGAV/DGEV
   1 Weber 32/36 DGV/DGAV/DGEV
   1 Weber 32/36 DFV/DFAV/DFEV
   1Weber 34 DAT/DATR/DATRA/DMTR
   1 Holley-Weber 5200

   Weber carburetor(s) with swaged fuel inlet fitting shall be replaced by drilling and tapping the carburetor body for a threaded fitting.

   Fuel injection manifold(s) shall not be replaced with carburetor manifold(s) from a different model, type, or engine size in order to fit an optional carburetor. All cars equipped with multiple carburetors shall run the original induction system, except for modifications allowed by Sections D.1.a., and D.1.a.2., above.

6. *The engine management computer may be altered or replaced. A throttle position sensor and its wiring may be added or replaced. A MAP or MAF sensor and its wiring may be added. Other existing sensors, excluding the stock air metering device, may be substituted for equivalent units.*

7. Wires and connectors in the engine wiring harness may be modified or replaced.

b. Any fuel pump(s)/filter(s) may be used. Pump(s) may be relocated, but shall not be located in the driver/passenger compartment. If a mechanical pump is replaced, a blanking plate may be used to cover the original mounting location. Fuel line(s) may be replaced, relocated, and given additional protection. If the relocated line(s) passes through the driver/ passenger compartment, it/they shall be metal or metal braided, and shall be securely fastened. An external fuel pump pressure regulator

may be installed.

c. Air cleaner assemblies may be modified, removed or replaced. Velocity stacks, ram air or cowl induction are not permitted unless fitted as original equipment. Air intake source shall be within the confines of the engine compartment or stock location. Air intake hoses, tubes, pipes, resonators, intake mufflers, housings, etc., located ahead of the carburetor/throttle body may be removed or substituted. On cars so equipped, the air metering/measuring device (i.e. air flow meter, air mass meter, MAF) must be operational and shall not be modified.

d. Exhaust emission control air pumps, associated lines, nozzles, and electrical/mechanical EGR devices may be removed. If such items are not removed, they shall not be modified in any way. If EGR devices/nozzles are removed from a cylinder head or manifold, any holes remaining shall be completely plugged. Water to an intake manifold may be blocked or removed as part of the emission system.

   1. If fitted, catalytic converter(s) may be removed.

   2. Those vehicles which have emission control devices removed and which are not registered and licensed for street operation may use any gasoline meeting the requirements of GCR Section 9.3 Fuel.

   3. Those vehicles registered and licensed for street use shall use the fuel specified by the workshop/owner's manual.

e. Any ignition system which utilizes the original distributor for spark timing and distribution is permitted. Internal distributor components and distributor cap may be substituted. Crankfire ignition systems are prohibited unless fitted as original equipment. Any spark plugs and ignition wires may be used. Ignition timing is unrestricted. Batteries may be replaced with those of alternate manufacture provided they are of similar amp-hour capacity and weight and are fitted in the standard location. Additional battery hold-down devices may be used, and are strongly recommended. Cars originally equipped with two (2) 6-volt batteries may replace them with one (1) 12-volt battery installed in either of the original battery locations.

f. Cars originally equipped with plastic/phenolic timing gears may substitute metal gears, provided that the design, dimensions, and cam timing remain as stock. Adjustable timing gears are prohibited on all cars unless fitted as stock.

g. Any exhaust header and exhaust system may be used. Exhaust shall exit behind the driver, and shall be directed away from the car body. Original exhaust system heat shields may be removed. A suitable muffler may be necessary to meet sound control requirements.

h. Oil pans, pan baffles, scrapers, windage trays, oil pickups, lines, and filters are unrestricted. Oil and power steering hoses may be replaced with metal braided hose (i.e. Aeroquip). A pressure accumulator/"Accusump" may be fitted. The location of the filter and accumulator are unrestricted, but they shall be securely mounted within the bodywork. All oil lines that pass into or through the driver/passenger compartment shall be metal or metal braided hose. Dry sump systems are prohibited unless fitted as standard equipment. Engine oil and oil

additives are unrestricted.

i. Oil catch tanks are permitted. All engine breathers or vapor recirculation lines, if disconnected, shall vent to a catch tank of one (1) quart minimum capacity. Such catch tanks shall not be mounted in the driver/passenger compartment. Original valve cover(s) may be modified to alter or to add breather/filler.

j. Engines may be bored to a maximum of .040 inch over standard bore size. Factory replacement pistons or their equivalent with the exception of diameter shall be used. Cast or forged equivalent pistons shall provide the same dome/dish/valve relief configuration, ring groove width and spacing, pin height relationship, weigh no less than the factory standard bore pistons. Piston rings are unrestricted.

k. Balancing and "blueprinting" of the engine assembly are permitted. Lightening of parts beyond the minimum material removal necessary to balance is prohibited.

l. Manifold and cylinder head port matching is permitted. No material may be removed further than one (1) inch in from the manifold to cylinder head mounting face(s). Carburetor mounting surface(s) shall not be modified, and external dimensions of the cylinder head or intake manifold may not be reduced to facilitate internal porting. Two piece manifolds are not intended to be port matched at their intermediate point.

Valve guide material is unrestricted.

Where a factory specification for original cylinder head thickness can be proven, a tolerance of .025 inch less than the service limit will be permitted. Under no circumstances may the compression ratio be increased by more than one-half (.5) point. An offset key may be used to return cam timing to the factory specifications. On engines with dual overhead camshafts, this key shall be installed on the crankshaft only.

m. Any clutch disc and pressure plate of stock diameter may be used, provided that they shall be bolted directly to an unmodified stock flywheel. Balancing of the flywheel/clutch/pressure plate assembly is permitted. Lightening of the flywheel beyond the minimum material removal necessary to balance is prohibited. The addition of an external scattershield per GCR 9.3 Scattershield/Chain Guards, is permitted and recommended. *Cars originally equipped with hydraulically-actuated clutches may replace the clutch hydraulic lines with steel lines or Teflon-lined metal braided hose.*

n. Alternate water pump, alternator, power steering, and crankshaft pulleys of any diameter or material may be used. Type of accessory drive (e.g., V-belt, toothed belt, etc.) shall remain as stock.

o. Hardware items (nuts, bolts, etc.) may be replaced with similar items performing the same fastening function(s). Cylinder head gasket(s) may be replaced with any gasket(s) having the same compressed thickness as stock. Other engine gaskets are unrestricted. Engine drive belts may be replaced with others of equivalent OEM specifications.

p. All engine components not otherwise listed in these rules shall meet factory specifications for stock parts. Where factory specifications are absent or unclear, e.g., cylinder head thick-

ness and/or combustion chamber depth, etc., the Club may establish an acceptable dimension and/or allowable tolerance from stock. Engine compartment cosmetic trim pieces may be removed.

q. The application and/or use of any painting, coating, plating, or impregnating substance (i.e. anti-friction, thermal barrier, oil shedding coatings, chrome, anodizing, etc.) to any internal engine surface, including intake manifold internal surface, is prohibited.

r. One (1) engine stayrod may be added.

2. Rotary engines (only)

a. Any porting or polishing is prohibited.

b. Rules D.1.a.-k., and D.1.m.-r., also apply.

c. Crankshaft pulley is unrestricted.

d. Alternate rotor seals and springs are permitted.

3. Engine Cooling System

a. Any radiator may be used, provided it is mounted in the original location, maintains the same plane as the original core and requires no body or structure modifications to install. No new openings created by fitting an alternate radiator may be used for the purpose of ducting air to the engine.

b. Oil cooler(s) may be added or substituted. Location within the bodywork is unrestricted, provided that it/they are not mounted within the driver/passenger compartment.

c. Cooling fans may be removed or replaced. Electrically operated fans with manual or automatic actuation may be fitted.

d. Thermostats may be modified, removed, or replaced with blanking sleeves or restrictors.

e. Air conditioning systems may be removed in whole or in part.

f. Screens of one-fourth (1/4) inch minimum mesh may be mounted in front of the radiator and/or oil cooler(s) and contained within the bodywork.

g. Engine coolant fluid, coolant/heater hoses and clamps may be substituted. Heater hoses may be plugged. Heater water control valve(s) may be added or substituted. Heater core and hoses shall not be removed.

4. Transmission/Final Drive

a. Any final drive ratio is permitted provided it fits the stock differential/transaxle housing without modification to the housing.

b. Any limited-slip or locked differential is permitted. *In AWD cars, the center differential must remain stock.*

c. No alteration to the stock transmission gear ratios for the make, model, type and engine size of automobile is allowed.

d. Hardware items (nuts, bolts, etc.) may be replaced by similar items performing the same fastening function(s).

e. Shift lever may be bent *or cut* above tunnel or floor.

f. Traction control, if available, must be disabled by discon-

necting or removing a minimum of three wheel speed sensors.

5. Chassis

a. Ride Height

1. Minimum ride height is five (5) inches, to be measured without driver at the lowest point of the rocker panel, but not to include welded seams or fasteners.

b. Springs and Shock Absorbers

1. Shock absorbers may be replaced provided that the replacements (a) attach to the original mounting points, and (b) are of a non-remote-reservoir design. The number and type (e.g., tube, lever, etc.) of shock absorbers shall be the same as stock. The interchange of gas and hydraulic shock absorbers is permitted. External adjustments of shock control shall be limited to two (2). No shock absorber may be capable of adjustment while the car is in motion.

2. MacPherson strut equipped cars may substitute struts, and /or may use alternate inserts. Spring seat ride height location may be altered from stock. Remote reservoir struts and/or inserts are prohibited. External adjustments of shock control shall be limited to two (2).

3. Springs of any origin may be used, provided they are of the same number and type as originally fitted, i.e., coil, leaf, torsion bar, and that they shall be installed in the original location using the original system of attachment. The joining of two or more coil springs by any means is prohibited. The use of tender springs are permitted. Shackles or spacers may be used to adjust leaf spring ride height. Spacers, including threaded units with adjustable spring seats, may be used with coil springs. Coil over threaded body shock/struts are permitted.

4. Spacers or lowering blocks may be used between leaf springs and the point(s) of attachment to the axle housing.

c. Suspension Control

1. Any anti-roll bar(s), traction bar(s), panhard rod or watts linkage may be added, removed, or substituted, provided its/their installation serves no other purpose. The mounts for these devices may be welded or bolted to the structure of the vehicle. No suspension control mount or component shall be located in the trunk or driver/passenger compartment unless installed by the manufacturer as original equipment. Traction bars used to control axle rotation shall be one piece solid bar or tube. Heim rod ends may be fitted.

2. On those cars where an anti-roll bar also acts as a suspension locating device, the diameter of the bar may be changed. Bar attachment and pivot points on the chassis and control arms shall remain as stock, except as provided for in these Rules, Sections D.5.d.1., and 3.

d. Suspension Mounting Points

1. Cars equipped with MacPherson strut suspension may decamber wheels by the use of eccentric bushings at control arm pivot points, by the use of eccentric bushings at the strut-to-bearing-carrier joint, and/or by use of slotted adjusting plates at the top mounting point. If slotted plates are used, they shall be located on existing

chassis structure and may not serve as a reinforcement for that structure. Material may be added or removed from the top of the strut tower to facilitate installation of adjuster plate.

2. On other forms of suspension, camber adjustment may be achieved by the use of shims and/or eccentric bushings.

3. All forms of suspension may adjust caster by means of shims or eccentric bushings. Additionally, MacPherson strut-equipped cars may adjust caster at the upper strut mounting point/plate.

4. Independent rear suspension mounting holes may be slotted and reinforced for purposes of camber and/or toe adjustment. Material may be removed from the top of the strut tower to facilitate installation of adjuster plate.

5. Cars may add one (1) front stayrod, located in one of the following areas:

   A. Between lower suspensions mounting points.

   B. Between the upper strut towers on Mac-Pherson strut equipped cars.

   C. Between upper front shock absorber mounts on cars with other forms of suspension.

6. Bushing material, including that used to mount a suspension subframe to the chassis, is unrestricted. This includes the use of spherical bearings, so long as no suspension component is modified to facilitate their installation. Retention of spherical bearings by use of tack welds is allowed, as long as the welds serve no other purpose.

7. Rubber bump stops may be removed, modified, or replaced, but their chassis mounts, brackets, etc., may not be altered in any way.

8. No other relocation or reinforcement of any suspension component or mounting point is permitted.

9. Hardware items (nuts, bolts, etc.) may be replaced by similar items performing the same fastening function(s).

6. Brakes

a. Brake pads, brake linings, and brake fluid are unrestricted.

b. Backing plates and dirt shields may be ventilated or removed. Air ducts may be fitted to the brakes, provided that they extend in a forward direction only, and that no changes are made in the body/structure for their use. Brake rotors and drums shall not be modified other than for truing within manufacturer's specifications.

c. Brake lines may be replaced with steel lines or Teflon-lined metal braided hose. Lines/hoses may be relocated and may be given additional protection. Brake fittings, adaptors, and connectors are unrestricted. Brake system circuitry may be revised, but no modification or substitution of the original master cylinder, its location, or mounting is permitted. Cars with antilock braking systems must disabled a minimum of three wheel speed sensors. Components that perform no other function than to assist in the activation of the ABS portion of

the brake system may be removed.

d. Brake proportioning valves may be used provided that they are of the in-line, pressure limiting type.

e. Parking brakes, mechanisms, and actuating components may be removed.

7. Wheels/Tires

a. Any wheel/tire may be used within the following limitations:

1. Cars originally equipped with twelve (12) inch wheels may fit thirteen (13) inch wheels. Cars originally equipped with metric 365 wheels may fit fourteen (14) inch wheels, and cars originally equipped with metric 390 wheels may fit fifteen (15) inch wheels. The above-mentioned cars as well as those cars originally equipped with thirteen (13) inch or fourteen (14) inch wheels may fit up to a fifteen (15) inch wheel. Cars may not fit wheel diameters smaller than those listed on their spec line. All other cars shall retain the wheel diameter fitted as original equipment for their make, model, and type. Knockoff/quickchange type wheels are prohibited. Wheels must be made of metal. Cars classified in ITR may utilize any wheel diameter up to 17" or retain their stock diameter wheels if larger.

2. *Tires must conform to 9.3.45.*

3. Track may be changed to accommodate larger tires, provided that there is safe tire/fender/chassis clearance under all conditions of steer, bump, and rebound. Wheel spacers are permitted.

4. Tire tread (that portion of the tire that contacts the ground under static conditions) shall not protrude beyond the fender opening when viewed from the top perpendicular to the ground. To determine compliance, the vehicle should be rolled through a powdered substance, as raced with driver, in order to indicate the tire tread contact patch under static conditions.

5. Any wheel stud, bolt, and or nut is permitted.

6. Maximum allowable rim widths: ITR - 8.5 inches, classes ITS and ITA - seven (7) inches; classes ITB and ITC - six (6) inches.

8. Body/Structure

a. Fenders and wheel openings shall remain unmodified. It is permitted to roll under or flatten any interior lip on the wheel opening for tire clearance. Cars with plastic/composite fenders may remove any interior wheel opening lip, but the resulting material edge shall be no thinner than the basic fender material thickness. Non-metallic inner fender liners may be removed.

b. A front spoiler/air dam is permitted. It shall not protrude beyond the overall outline of the body when viewed from above perpendicular to the ground, or aft of the forward most part of the front fender opening. This body outline does not include bumpers or bumper mounts. The spoiler/air dam shall be mounted to the body, and may extend no higher than four (4) inches above the horizontal centerline of the front wheel hubs. It shall not cover the normal grille opening(s) at the front of the car. Openings are permitted for the purposes of ducting

air to the brakes, cooler, and radiator. Dealer installed or limited production front/rear spoilers/air dams/wings are prohibited. The spoiler shall have no support or reinforcement extending aft of the forward most part of the front fender wheel opening.

NOTE: Integrated bumper assemblies are defined as those designs where an external non-metallic bumper cover completely encloses the primary energy-absorbing bumper and where this cover could be installed in its normal position with the underlying bumper removed. On cars with integrated bumpers, the front spoiler or airdam may be attached to the bumper cover.

Where an air dam/spoiler is used, two total openings may be cut in the front valance to allow the passage of up to a three (3) inch diameter duct leading to each front brake/rotor assembly.

Where no air dam/spoiler is used, two total openings of a maximum size five (5) inches by seven (7) inches maybe cut in the front valance so that brake ducts can be added with a three (3) inch diameter hose leading to each front brake/rotor assembly.

c. No part of the car, except for the exhaust system and suspension components, shall be lower than the lowest part of the wheel rims.

d. Windshield clips and rear window straps per the GCR Section 9.3 Windshield Clips/Rear Window Straps, are permitted and recommended.

e. Hood and trunk pins, clips, or positive action external latches are permitted. Stock hood and trunk latches may be disabled or removed; if so, some positive action external fastening method shall be used. Engine compartment insulation may be removed.

f. Convertible tops and attaching hardware shall be completely removed. Note: Convertible model cars are permitted if they were only available as convertibles (e.g. MG Midget), or if the convertible model is specifically allowed on the vehicle spec line. Convertible models may compete with their respective OEM hardtop. All latches shall be replaced with positive fasteners. Manual and electric sunroofs, original or aftermarket, where the panel is not normally removable shall be retained and run in the closed position. Components (motors, cables, rails) may be removed provided the panel is securely retained. Removable sunroof or T-top may be retained if bolted or welded in, or removed completely. Glass sunroofs must be removed. All sunroofs may be replaced with panel or replacement skin of the same material as the original surrounding roof material.

g. Any paint scheme and markings meeting GCR specifications are permitted.

h. All chassis/structural/electrical repair, if performed, shall be in concurrence with factory procedures, specifications, and dimensions. Unless specifically authorized by the manufacturer for repair or allowed by these rules, no reinforcement, i.e., seam welding, material addition, etc., is permitted.

i. Body repair shall be performed using every reasonable effort to maintain stock body contours, lips, etc. Any body repair modification having as its purpose increased clearance is prohibited.

In those circumstances where stock trim/molding pieces are unavailable through all normal replacement channels, proof of such unavailability shall be provided by the competitor.

j. Radio antennas may be removed. Antennas for two-way radio may be added.

k. Body side moldings, rocker panel moldings and wheel opening trim pieces (not stock flares) may be removed. Resulting holes may be filled.

9. Driver/Passenger Compartment - Trunk

a. The driver's seat (only) shall be replaced with a one-piece bucket-type race seat. Factory seat tracks/brackets may be modified, reinforced, and/or removed to facilitate replacement mountings provided they perform no other function. All other seats may be removed.

b. Any steering wheel except wood rimmed types may be used. Any shift knob may be used.

c. Gauges and instruments may be added, replaced, or removed. They may be installed in the original instrument(s) location using a mounting plate(s), or any other location using a secure method of attachment. Other than modifications made to mount instruments and provide for roll cage installation, the remainder of the dash "board" or panel shall remain intact.

d. Any interior or exterior mirrors may be used.

e. Front passenger seat, rear seat back, rear seat bottom cushion(s), sun visors, seat belts and their attaching hardware and bracketry may be removed. In any automobile where allowed removal of rear seats, upholstery, etc., creates an opening between the driver/passenger compartment and an exposed gas tank, fuel cell, or part thereof, a metal bulkhead which completely fills such opening shall be installed (See GCR 9.3 Fuel Cell Specifications).

f. Carpets, center consoles, floor mats, headliners, sun roof liner and frame, dome lights, grab handles, and their insulating, attaching or operating mechanisms may be removed. Sound deadening (melt sheets) and undercoating may be removed. Door interior trim panels may be replaced with 0.060" - 0.065" aluminum securely attached to the door. All other interior trim panels, except the dashboard, may be removed. Other than to provide for the installation of required safety equipment or other authorized modifications, no other driver/passenger compartment alterations or gutting are permitted.

g. Any removable covers used to cover spare tires, tools, bins, etc., may be removed along with attaching hardware and bracketry. Carpets, mats, and their insulating or attaching materials may be removed from the floor and recesses of the cargo/ trunk/spare tire area.

h. Dead pedal/foot rest and heel stop may be added.

i. Ducting may be added to provide fresh air to the driver/ passenger compartment. This ducting shall be located in the driver and/or passenger window area, with no modifications to the bodywork. Only the cooling duct is permitted in the window area. It is not permitted to otherwise fill in the window area. The complete duct assembly in the plane of the window

shall be no larger than 100 square inches.

j. Audio systems may be removed in their entirety. Two-way radios are permitted.

k. Modifications may be made to the foot pedals to improve the comfort of and control accessibility to the driver.

l. Ballast may be used. All ballast shall be located in the front passenger footwell/seating area, aft of the firewall and any footwell angle, and forward of the aft-edge of the forward-most passenger door opening, unless otherwsie specified on the vehicle's spec line. OEM front passenger seat location.

   1. It shall be in segments no heavier than fifty (50) pounds, and shall be capable of being removed to be weighed apart from the car.

   2. Each segment shall be fastened with a minimum of two (2) one-half (1/2) inch bolts and positive lock nuts of SAE Grade 5 or better, and shall utilize large-diameter, load-distributing washers.

   3. Holes may be drilled in the front passenger footwell/seating area floorpan for purposes of mounting the ballast (only), and said floorpan may be reinforced as required for the same purpose.

m. If equipped, the vent window and its supporting structure may be removed.

10. Safety

a. The stock fuel tank may be replaced with a fuel cell. The fuel cell shall be located within twelve (12) inches of the original fuel tank location. Additional reinforcement may be added to support the fuel cell, but such reinforcement shall not attach to the roll cage. Floor pan may be modified for installation. See GCR Section 9.3 Fuel Cell Specifications, for requirements.

b. Spare wheels and tires may be removed.

c. Air bag systems shall be disarmed and may be removed.

d. If so equipped, the rolling door lock mechanism may be deactivated by unplugging the components.

E. MEASUREMENT STANDARDS

Measurement standards shall be as specified in Appendix C. with the following exceptions: Wheelbase has a tolerance of + 2"/- 1".

NOTES:

ITR	Engine Type	Bore x Stroke(mm)/ Displ. (cc)	Valves IN & EX (mm)	Comp. Ratio	Wheel-base (inch)	Wheel Dia. (inch)	Gear Ratios	Brakes Std. (mm)	Weight (lbs)	Notes:
Acura Integra Type R (97-98/00-01)	4 Cyl DOHC	81.0 x 87.2 1797	(I) 33.0 (E) 28.0	10.6	101.2	15	3.23, 2.10, 1.46, 1.11, 0.85	(F) 286 Vented Disc (R) 260 Solid Disc	2535	
Acura Legend (91-95)	6 Cyl SOHC	90.0 x 84.0 3206		9.6	114.6	15	2.937, 1.692, 1.060, 0.769, 0.581 or 2.937, 1.692, 1.151, 0.868, 0.682 or 2.940, 1.690, 1.150, 0.870, 0.680, 0.520	(F) 286 Vented Disc (R) 260 Solid Disc	3135	
Acura RSX-S (02-*04*)	4 Cyl DOHC	86.1 x 86.0 1988	(I) 35.2 (E) 30.2	11.0	101.2	16	3.27, 2.13, 1.52, 1.15, 0.92, 0.74	(F) 300 Vented Disc (R) 260 Solid Disc	2665	
BMW 325i/is (92-95)	6 Cyl DOHC	84.0 x 75.0 2494	(I) 33.0 (E) 30.5	10.5	106.3	15 / 16	4.23, 2.52, 1.67, 1.22, 1.00	(F) 286 Vented Disc (R) 280 Solid Disc	2765	Trunk mounted fuel cell may be used but shall be no larger than stock.
BMW 325i/ci Coupe E46 (01-*06*)	6 Cyl DOHC	84.0 x 75.0 2494	(I) 33.0 (E) 30.5	10.5	107.3	16	4.21, 2.45, 1.66, 1.24, 1.00	(F) 300 Vented Disc (R) 294 Vented Disc	2800	
BMW 328i/ is E36 (96-99)	6 Cyl DOHC	84.0 x 84.0 2793	(I) 33.0 (E) 30.5	10.2	106.3	16	4.21, 2.49, 1.66, 1.24, 1.00	(F) 286 Vented Disc (R) 280 Solid Disc	2850	Trunk mounted fuel cell may be used but shall be no larger than stock.
BMW 328i/ ci E46 (99-00)	6 Cyl DOHC	84.0 x 84.0 2793	(I) 33.0 (E) 30.5	10.2	107.3	17	4.21, 2.45, 1.66, 1.24, 1.00	(F) 325 Vented Disc (R) 320 Solid Disc	2900	

ITR	Engine Type	Bore x Stroke(mm)/ Displ. (cc)	Valves IN & EX (mm)	Comp. Ratio	Wheel-base (inch)	Wheel Dia. (inch)	Gear Ratios	Brakes Std. (mm)	Weight (lbs)	Notes:
BMW 330i/ci (01-*06*) *(excludes ZHP)*	6 Cyl DOHC	84.0 x 89.6 2979	(I) 33.0 (E) 30.5	10.2	107.3	17	4.21, 2.45, 1.66, 1.24, 1.00	(F) 325 Vented Disc (R) 320 Vented Disc	3290	Trunk mounted fuel cell may be used but shall be no larger than stock.
BMW M3 (88-91)	4 Cyl DOHC	93.5 x 84.1 2302	(I) 37.0 (E) 33.0	10.5	101.0	15	3.38, 2.20, 1.40, 1.00, 0.81	(F) 280 Vented Disc (R) 282 Solid Disc	2650	Trunk mounted fuel cell may be used but shall be no larger than stock.
BMW Z3 2.8L Coupe & Rdstr. (97-00)	6 Cyl DOHC	84.0 x 84.0 2793	(I) 33.0 (E) 30.5	10.2	96.3	16	4.21, 2.49, 1.66, 1.24, 1.00	(F) 286 Vented Disc (R) 272 Solid Disc	*(97-98): 2765 (99-00): 2800*	
BMW Z3 3.0L Coupe & Rdstr. (01-02)	6 Cyl DOHC	84.0 x 89.6 2979	(I) 33.0 (E) 30.5	10.2	96.3	17	4.21, 2.49, 1.66, 1.24, 1.00	(F) 300 Vented Disc (R) 272 Solid Disc	3240	
BMW Z4 2.5 (03-*06*)	6 Cyl DOHC	84.0 x 75.0 2494	(I) 33.0 (E) 30.5	10.5	98.2	16	4.23, 2.52, 1.66, 1.22, 1.00	(F) 286 Vented Disc (R) 280 Solid Disc	2795	
Chevrolet Camaro (87-92) (exclude 1LE & BC4 Package)	V-8 OHV	94.9 x 88.4 5000	(I) 1.84 (E) 1.50	9.3	101.1	16	2.75, 1.94, 1.34, 1.00, .73	(F) 267 x 37 (vented) (R) 296 x 21 (vented) Alt: 242 x 51 (drum)	3465	
Chevrolet Camaro (96-02)	V-6 OHV	96.5 x 86.36 3790	(I) 45.72 (E) 38.6	9.4	101.1	16	3.75, 2.19, 1.41, 1.00, 0.72	(F) 302 Disc (R) 305 Disc	2815	
Dodge Stealth R/T (non-turbo FWD) (91-96)	V-6 DOHC	91.2 x 79.5 2972	(I) 34.9 (E) 30.5	10.0	97.2	16	3.09, 1.83, 1.22, 0.89, 0.74	(F) 277 Disc (R) 267 Disc	3120	

ITR	Engine Type	Bore x Stroke(mm)/ Displ. (cc)	Valves IN & EX (mm)	Comp. Ratio	Wheel-base (inch)	Wheel Dia. (inch)	Gear Ratios	Brakes Std. (mm)	Weight (lbs)	Notes:
Ford Contour SVT (98-00)	V-6 DOHC	82.4 x 79.5 2544	(I) 32.0 (E) 26.0	10.0	106.5	16	3.42, 2.14, 1.45, 1.03, 0.77	(F) 279 Disc (R) 251 Disc	2590	
Ford Mustang GT & LX (89-93) (exclude Cobra)	V-8 OHV	101.6 x 76.2 4942	(I) 45.3 (E) 36.9	9.0	100.4	15	2.95, 1.94, 1.34, 1.00, 0.63	(F) 280 vented (R) 254 x 51 (drum)	3340	
Ford Mustang GT (94-95) (exclude Cobra)	V-8 OHV	101.6 x 76.2 4942	(I) 45.3 (E) 36.9	9.0	101.3	16	3.35, 1.99, 1.33, 1.00, 0.68	(F) 276 x 26 vented (R) 266 x 14 solid	3195	
Ford Mustang GT (96-98)	8 cyl. SOHC	90.2 x 90.0 4601	(I) 44.5 (E) 34.0	9.0	101.3	16/17	3.37, 1.99, 1.33, 1.00, 0.67	(F) 273 vented (R) 267 solid	3390	
Ford Mustang (99-*04*)	V-6 SOHC	96.8 x 86.0 3797	(I) 47.3 (E) 37.1	9.3	101.3	16	3.37, 1.99, 1.33, 1.00, 0.67	(F) 276 Vented Disc (R) 266 Solid Disc	2670	
Ford Mustang (2005)	*6 cyl. SOHC*	*100.4 x 84.4 4010*	*(I) 46.1 (E) 39.1*	*9.7*	*107.1*	*16*	*3.75, 2.19, 1.41, 1.00, 0.72*	*(F) 292.1x30.5 vented (R) 299.7x19.0 vented*	*2955*	
Ford Taurus SHO (89-95)	V-6 DOHC	89.0 x 80.0 2986	(I) 35.0 (E) 30.0	9.8	106.0	15/16	3.60, 2.12, 1.39, 1.02, 0.77	(F) 258/276 Vented Disc (R) 256 Vented Disc	2890	
Honda Prelude (93-96)	4 Cyl DOHC	87.0 x 90.0 2157	(I) 35.0 (E) 30.0	10.0	100.4	15	3.31, 1.95, 1.36, 1.07, 0.87	(F) 280 Vented Disc (R) 258 Solid Disc	2570	

ITR	Engine Type	Bore x Stroke(mm)/ Displ. (cc)	Valves IN & EX (mm)	Comp. Ratio	Wheel-base (inch)	Wheel Dia. (inch)	Gear Ratios	Brakes Std. (mm)	Weight (lbs)	Notes:
Honda Prelude (non SH) (97-01)	4 Cyl DOHC	87.0 x 90.0 2157	(I) 35.0 (E) 30.0	10.0	101.8	16	3.31, 1.95, 1.31, 1.07, 0.87 or 3.29, 1.96, 1.34, 1.03, 0.81	(F) 280 Vented Disc (R) 258 Solid Disc	2640	
Honda Prelude SH (97-01)	4 Cyl DOHC	87.0 x 90.0 2157	(I) 35.0 (E) 30.0	10.0	101.8	16	3.31, 1.95, 1.31, 1.07, 0.87 or 3.29, 1.96, 1.34, 1.03, 0.81	(F) 280 Vented Disc (R) 258 Solid Disc	2640	
Honda S2000 (00-03)	4 Cyl DOHC	87.0 x 84.0 1997	(I) 36.0 (E) 31.0	11.0	94.5	16	3.13, 2.05, 1.48, 1.16, 0.97, 0.81	(F) 300 Vented Disc (R) 282 Solid Disc	3005	
Honda S2000 (04-*06*)	4 Cyl DOHC	87.0 x 90.7 2157	(I) 36.1 (E) 31.1	11.1	94.5	17	3.13, 2.05, 1.48, 1.16, 0.94, 0.76	(F) 300 Vented Disc (R) 282 Solid Disc	3005	
Lexus IS300 (01-02)	6 Cyl DOHC	86.0 x 86.0 2997	(I) 33.6 (E) 29.0	10.5	105.1	16	3.57, 2.06, 1.38, 1.00, 0.85	(F) 296 Vented Disc (R) 307.1 Solid Disc	3145	
Lexus SC300 (92-00)	6 Cyl DOHC	86.0 x 86.0 2997	(I) 33.6 (E) 29.0	10.5	105.9	16	3.26, 1.89, 1.28, 1.00, 0.78	(F) 275 or 296 Vented Disc (R) 307 Vented Disc	3290	
Mazda MX-5 (2006)	*4 cyl. DOHC*	*87.4 x 83.1 1998*	*(I) 35.0 (E) 30.0*	*10.8:1*	*91.7*	*17*	*3.82, 2.26, 1.64,1.18, 1.00, 0.83*	*((F) 290.0x22 vented (R) 280.0x10 solid*	*2440*	*classification effective 1/1/11*
Mazda RX-8 (04-*06*)	2 Rotor	2600cc	NA	10.0	2703	18	3.76, 2.27, 1.65, 1.19, 1.00, 0.84	(F)323 Vented Disc (R)303 Vented Disc	2850	

ITR	Engine Type	Bore x Stroke(mm)/ Displ. (cc)	Valves IN & EX (mm)	Comp. Ratio	Wheel-base (inch)	Wheel Dia. (inch)	Gear Ratios	Brakes Std. (mm)	Weight (lbs)	Notes:
Mitsubishi 3000 GT (non-turbo FWD) (91-99)	V-6 DOHC	91.2 x 79.5 2972	(I) 34.9 (E) 30.5	10.0	97.2	16	3.09, 1.83, 1.22, 0.89, 0.74	(F) 277 Disc (R) 267 Disc	3120	
Nissan 300ZX (89-96)	V-6 DOHC	87.0 x 83.0 2960	(I) 34.0 (E) 29.5	10.5	96.5	16	3.21, 1.93, 1.30, 1.00, 0.75	(F) 295 Disc (R) 297 Disc	*3120*	
Nissan Maxima (00-01)	V-6 DOHC	93.0 x 73.3 2988	(I) 36.3 (E) 31.5	10.0	108.3	16	3.29, 1.85, 1.27, 0.95, 0.80	(F) 280 Vented Disc (R) 278 Solid Disc	3040	
Pontiac Firebird (96-02)	V-6 OHV	96.5 x 86.36 3790	(I) 45.72 (E) 38.6	9.4	101.1	16	3.75, 2.19, 1.41, 1.00, 0.72	(F) 302 Disc (R) 305 Disc	2815	
Pontiac Fire-bird (87-92) (exclude 1LE & BC4 Package)	V-8 OHV	94.9 x 88.4 5000	(I) 1.84 (E) 1.50	9.3	101.1	16	2.75, 1.94, 1.34, 1.00, .73	(F) 267 x 37 (vented) (R) 296 x 21 (vented) Alt: 242 x 51 (drum)	3465	
Porsche 911S 2.0 (1969)	*6 cyl. SOHC*	*80.0 x 66.0 1991*	*(I) 45.0 (E) 39.0*	*9.8*	*89.3*	*15*	*3.09, 1.88, 1.31, 1.04, 0.79*	*(F) 282.5x20 vented (R) 286.0x20 vented*	*2365*	*Other transaxle gear sets that can be shown through factory documentation to have been available for factory order on a new car are allowed.*
Porsche 911S 2.2 (1970-71)	*6 cyl. SOHC*	*84.0 x 66.0 2195*	*(I) 45.0 (E) 39.0*	*9.8*	*89.3*	*15*	*3.09, 1.77, 1.22, 1.08, 0.75*	*(F) 282.5x20 vented (R) 286.0x20 vented*	*2505*	*Other transaxle gear sets that can be shown through factory documentation to have been available for factory order on a new car are allowed.*
Porsche 911S 2.4 (1972-73)	*6 cyl. SOHC*	*84.0 x 70.4 2341*	*(I) 46.0 (E) 40.0*	*8.5*	*101.2*	*15*	*3.18, 1.77, 1.125, 0.82; 3.27, 1.94, 1.26, 0.96, 0.75*	*(F) 282.5x20 vented (R) 286.0x20 vented*	*2630*	*Other transaxle gear sets that can be shown through factory documentation to have been available for factory order on a new car are allowed.*
Porsche 911/911S/911 Carerra (74-77)	6 Cyl SOHC	90.0 x 70.4 2687	(I) 46.0 (E) 44.0	8.5	89.4	15	3.18, 1.83, 1.26, 1.00, 0.82	(F) 282.5 Vented Disc (R) 290 Solid Disc	2400	

ITR	Engine Type	Bore x Stroke(mm)/ Displ. (cc)	Valves IN & EX (mm)	Comp. Ratio	Wheel-base (inch)	Wheel Dia. (inch)	Gear Ratios	Brakes Std. (mm)	Weight (lbs)	Notes:
Porsche 911SC (78-83)	6 Cyl SOHC	95.0 x 70.4 2994	(I) 49.0 (E) 41.5	9.3	94.0	16	3.18, 1.83, 1.26, 1.00, 0.78	(F) 282.5 Vented Disc (R) 290 Vented Disc	2630	
Porsche 944S2 (89-91)	4 Cyl DOHC	104.0 x 88.0 2990	(I) 37.0 (E) 33.0	10.9	94.5	16	3.18, 2.00, 1.44, 0.91, 0.78	(F) 298 Vented Disc (R) 299 Vented Disc	2810	
Porsche 968 (93-97)	4 Cyl DOHC	104.0 x 88.0 2990	(I) 37.0 (E) 33.0	10.9	94.5	16	3.50, 2.06, 1.40, 1.03, 0.83, 0.78	(F) 298 Vented Disc (R) 299 Vented Disc	3055	
Porsche Boxster (97-99)	6 Cyl DOHC	85.5 x 72.0 2480		11.0	95.1	16	3.50, 2.12, 1.43, 1.03, 0.79	(F) 298 Vented Disc (R) 292 Vented Disc	2830	
Toyota Celica GTS (00-*05*)	4 Cyl DOHC	82.0 x 85.0 1796	(I) 32.0 (E) 27.5	11.5	102.3	15	3.17, 2.05, 1.48, 1.17, 0.92, 0.73	(F) 272 Vented Disc (R) 267 Solid Disc	2380	
Toyota Supra (87-92)	6 Cyl DOHC	83.1 x 90.9 2956	(I) 32.5 (E) 28.5	9.2	102.2	16	3.28, 1.89, 1.27, 1.00, 0.78	(F) 302 Vented Disc (R) 292 Solid Disc	2925	
Toyota Supra (93-97)	6 Cyl DOHC	86.0 x 86.0 2997	(I) 33.5 (E) 29.0	10.0	100.4	16	3.29, 1.89, 1.28, 1.00, 0.78	(F) 294 Vented Disc (R) 305 Vented Disc	3220	

ITS	Engine Type	Bore x Stroke(mm)/ Displ. (cc)	Valves IN & EX (mm)	Comp. Ratio	Wheel-base (inch)	Wheel Dia. (inch)	Gear Ratios	Brakes Std. (mm)	Weight (lbs)	Notes:
Acura Integra GSR (92-93)	4 Cyl DOHC VTEC	81.0 x 81.4 1678	(I) 33.0 (E) 38.0	9.3	100.4	14	3.31, 2.11, 1.46, 1.11, 0.88	(F) 262 x 21 Vented Disc (R) 239 x 10 Solid Disc	2430	
Acura Integra GSR (3 door) (94-00)	4 Cyl DOHC VTEC	81.0 x 87.2 1797	(I) 33.0 (E) 28.0	10.0	101.2	15	3.23, 1.9, 1.36, 1.0, 0.79	(F) 262 x 21 Vented Disc (R) 239 x 10 Solid Disc	2590	
Alfa Romeo GTV-6 (81-86)	V-6 SOHC	88.0 x 68.3 2492	(I) 41.0 (E) 36.5	9.0	94.5	15	3.50, 1.96, 1.26, 0.95, 0.78	(F) 267 Disc (R) 249 Disc	2680	Bosch L-Jetronic Fuel Injection
Alfa Romeo Milano 2.5L (87-89)	V-6 SOHC	88.0 x 68.3 2492	(I) 41.0 (E) 36.6	9.0	98.8	15	2.88, 1.72, 1.23, 0.95, 0.78 or 3.50, 1.96, 1.26, 0.95, 0.78 or 3.50, 1.96, 1.35, 1.03, 0.78 or 2.88, 1.72, 1.23, 0.95, 0.78	(F) 267 Disc (R) 249 Disc	2780	Bosch L-Jetronic Fuel Injection
Alfa Romeo Milano 3.0L (87-89)	V-6 SOHC	93.0 x 72.6 2959	(I) 44.0 (E) 36.6	9.5	98.8	15	2.88, 1.72, 1.23, 0.95, 0.78	(F) 267 Disc (R) 249 Disc	2780	Bosch L-Jetronic Fuel Injection
BMW 323i (E46) (98-00)	6 Cyl DOHC	84.1 x 75.0 2494	(I) 33.0 (E) 30.5	10.5	107.3	15 / 16	4.23, 2.52, 1.66, 1.22, 1.00	(F) 286 Vented Disc (R) 276 Vented Disc	3000	
BMW 325i/is (87-91)	6 Cyl SOHC	3.31 x 2.95 2494	(I) 41.9 (E) 36.1	8.8	101.0	14	3.83, 2.20, 1.40, 1.00, 0.81	(F) 262 Disc (R) 259 Disc	2750	Trunk mounted fuel cell may be used but shall be no larger than stock.
BMW 325i/is (2 & 4door) (92-95)	6 Cyl DOHC	84.1 x 75.0 2494	(I) 33.0 (E) 30.5	(1992): 10.0 (93-95): 10.5	106.3	15 / 16	4.23, 2.52, 1.67, 1.22, 1.00	(F) 287 Disc (R) 280 Disc	2850	Trunk mounted fuel cell may be used but shall be no larger than stock. 29mm SIR required and must comply with Appendix B.
Chevrolet Cobalt SS (2006)	*4 cyl. DOHC*	*88.0 x 98.0 2384*	*(I) 35.25 (E) 30.25*	*10.9*	*103.5*	*17*	*3.58, 2.02, 1.35,0.98, 0.69*	*((F) 296.0x26 vented (R) 270.0x14 solid*	*2605*	*Non-supercharged. Classification effective 1/1/11*

ITS	Engine Type	Bore x Stroke(mm)/ Displ. (cc)	Valves IN & EX (mm)	Comp. Ratio	Wheel-base (inch)	Wheel Dia. (inch)	Gear Ratios	Brakes Std. (mm)	Weight (lbs)	Notes:
Ford Contour V-6 (non-SVT) (1995)	V-6 DOHC	82.4 x 79.5 2544	(I) 32.0 (E) 26.0	9.7	106.5	15	3.42, 2.14, 1.45, 1.03, 0.77	(F) 259 Disc (R) 252 Disc	2665	
Ford Focus SVT (02-04)	4 Cyl DOHC	84.8 x 88.0 2000	(I) 33.5 (E) 28.0	10.2	2616mm	17	(overall) 12.7, 7.7, 5.7, 4.6, 3.8, 3.1	(F) 300 Vented Disc (R) 280 Solid Disc	2590	
Ford Mustang LX V-6 (94-98)	V-6 OHV	96.8 x 86.0 3797	(I) 45.0 (E) 37.0	9.0	101.3	15	3.35, 1.93, 1.29, 1.00, 0.73	(F) 275 Vented Disc (R) 267 Disc	2470	
Ford Probe GT (1993)	V-6 DOHC	84.5 x 74.2 2495	(I) 32.2 (E) 27.8	9.2	102.9	15 / 16	3.31, 1.83, 1.31, 1.03, .80	(F) 258 Disc (R) 261 Disc	2570	
Honda Civic Del Sol VTEC (94-96)	4 Cyl DOHC	81.0 x 77.4 1595	(I) 33.0 (E) 28.0	10.2	93.3	14	3.307, 2.105, 1.458, 1.107, 0.848	(F) 262 Disc (R) 239 Disc	2430	Petty-bar style cage is permitted. Rear cage braces may pass through rear window. Roll cage for cars under 2200 lbs are acceptable for cars registered with SCCA before 5/1/06.
Honda Civic Si (99-00)	4 Cyl DOHC	81.0 x 77.4 1595	(I) 33.0 (E) 28.0	10.2	103.2	15	3.23, 2.11, 1.46, 1.11, 0.88	(F) 262 Vented Disc (R) 239 Solid Disc	2430	Roll cage for cars under 2200 lbs are acceptable for cars registered with SCCA before 5/1/06.
Honda Civic Si (2006)	*4 cyl. DOHC*	*88.0 x 98.0 1998*	*(I) 35.0 (E) 30.0*	*11.0:1*	*104.3*	*17*	*3.27, 2.13, 1.52, 1.15, 0.92, 0.66*	*((F) 296.0x26 vented (R) 270.0x14 solid*	*3000*	*classification effective 1/1/11*
Honda Prelude Si (92-96)	4 Cyl DOHC	87.0 x 95.0 2259	(I) 34.0 (E) 29.0	9.8	100.4	15	3.31, 1.86, 1.32, 1.03, 0.81	(F & R) 259 Disc	2555	
Honda Prelude Si VTEC (93-96)	4 Cyl DOHC	87.0 x 90.0 2157	(I) 35.0 (E) 30.0	10.0	100.4	15	3.31, 1.95, 1.36, 1.07, 0.87	(F) 280 Vented Disc (R) 258 Solid Disc	2905	

ITS	Engine Type	Bore x Stroke(mm)/ Displ. (cc)	Valves IN & EX (mm)	Comp. Ratio	Wheel-base (inch)	Wheel Dia. (inch)	Gear Ratios	Brakes Std. (mm)	Weight (lbs)	Notes:
Honda Prelude SH (97-01)	4 Cyl DOHC	87.0 x 90.0 2157	(I) 35.0 (E) 30.0	10.0	101.8	16	3.31, 1.95, 1.31, 1.07, 0.87 & 3.29, 1.96, 1.34, 1.03, 0.81	(F) 280 x 24 Vented Disc (R) 258 x 9 Solid Disc	2905	
Honda Prelude non-SH (97-01)	4 Cyl DOHC	87.0 x 90.0 2157	(I) 35.0 (E) 30.0	10.0	101.8	16	3.31, 1.95, 1.31, 1.07, 0.87 & 3.29, 1.96, 1.34, 1.03, 0.81	(F) 280 x 24 Vented Disc (R) 258 x 9 Solid Disc	2825	
Jensen Healey (Roadster) (73-79)	4 Cyl DOHC	95.2 x 69.3 1973		8.4	92.0	13	3.37, 2.16, 1.58, 1.24, 1.00	(F) 254 Disc (R) 229 x 45 Drum	2240	(2) Zenith-Stromberg IV Carburetors
Mazda 626 LX/ES (93-97)	V-6 DOHC	84.5 x 74.2 2495	(I) 32.2 (E) 27.8	9.2	102.9	15	3.31, 1.83, 1.31, 1.03, .80	(F) 258 Vented Disc (R) 261 Solid Disc	2570	
Mazda MX-5 / Miata (99-00)	4 Cyl DOHC	83.0 x 85.0 1839	(I) 33.10 (E) 28.15	9.5	89.2	14 / 15	3.14, 1.89, 1.33, 1.00, 0.81 & 3.76, 2.27, 1.65, 1.26, 1.00, .84	(F) 255 Vented Disc (R) 252 Solid Disc	2375	
Mazda MX-5 / Miata (01-*05*)	4 Cyl DOHC	83.0 x 85.0 1839	(I) 33.10 (E) 28.15	10.0	89.2	15 / 16	3.14, 1.89, 1.33, 1.00, 0.81 & 3.76, 2.27, 1.65, 1.26, 1.00, .84	(F) 255 or 269.5 Vented Disc (R) 252 or 267.9 Solid Disc	2375	
Mazda MX-6 (1993)	V-6 DOHC	84.5 x 74.2 2495	(I) 32.2 (E) 27.8	9.2	102.9	15	3.31, 1.83, 1.31, 1.03, .80	(F) 258 Vented Disc (R) 261 Solid Disc	2570	
Mazda RX-7 (13B) (84-85)	2 Rotor	2616		9.4	95.3	14	3.62, 2.19, 1.42, 1.00, 0.76 & 3.62, 1.19, 1.42, 1.00, 0.81	(F) 250 Disc (R) 256 Disc	2350	

ITS	Engine Type	Bore x Stroke(mm)/ Displ. (cc)	Valves IN & EX (mm)	Comp. Ratio	Wheel-base (inch)	Wheel Dia. (inch)	Gear Ratios	Brakes Std. (mm)	Weight (lbs)	Notes:
Mazda RX-7/ Convertible (13B) (86-91)	2 Rotor	2616		9.4/9.7	95.7	14 / 15	3.48, 2.00, 1.37, 1.00, 0.71 & 3.48, 2.00, 1.37, 1.00, 0.70 & 3.48, 2.00, 1.37, 1.00, 0.76	(F) 250 Disc (R) 256 Disc alt. (F) 277 Disc (R) 272 Disc	2680	16" wheel not allowed. 5th and 6th intake port actuators and valves may be removed or disabled.
Mercedes-Benz 190 E 2.3L 16V	4 Cyl SOHC	96.5 x 80.3 2299	(I) 38.0 (E) 33.0		104.9	15			2800	
Mercedes-Benz 190 E 2.6L 12V (87-93)	6 Cyl SOHC	82.9 x 80.3 2599	(I) 40.0 (E) 35.0	9.2	104.9	15	3.86, 2.18, 1.38, 1.00, 0.80	(F) 262 Disc (R) 258 Disc	2695	
Mercury Cougar (1999)	6 Cyl DOHC	82.4 x 79.5 2544	(I) 32.0 (E) 28.0	9.7	106.4	16	3.42, 2.14, 1.48, 1.11, 0.85	(F) 278 Vented Disc (R) 253 Solid Disc	2650	
Nissan/Datsun 240-Z (70-73)	6 Cyl SOHC	83.0 x 73.3 2380	(I) 42.0 (E) 33.0	9.0	90.7	14	3.55, 2.20, 1.42, 1.00 & 3.59, 2.25, 1.42, 1.00	(F) 272 Disc (R) 229 x 41 Drum	2430	(2) Hitachi-SU (1V) Carburetors
Nissan/Datsun 260-Z (73-74)	6 Cyl SOHC	83.0 x 79.0 2565	(I) 42.0 (E) 35.0	8.8	90.7	14	3.59, 2.25, 1.42, 1.00	(F) 272 Disc (R) 229 x 41 Drum	2480	(2) Hitachi-SU (1V) Carburetors
Nissan/Datsun 280-Z (75-78)	6 Cyl SOHC	86.1 x 79.0 2760	(I) 44.2 (E) 35.3	8.3	90.7	14	3.32, 2.08, 1.31, 1.00 & 3.32, 2.08, 1.31, 1.00, 0.86	(F) 272 Disc (R) 229 x 41 Drum	2505	Nissan (Bosch) L-Jetronic fuel injection
Nissan/Datsun 280-ZX 2+2 (79-83)	6 Cyl SOHC	86.1 x 79.0 2760	(I) 44.2 (E) 35.3	8.3	102.6	14	3.32, 2.08, 1.31, 1.00 & 3.32, 2.08, 1.31, 1.00, 0.86	(F) 252 Vented Disc (R) 258or269 Solid Disc	2530	Nissan (Bosch) L-Jetronic fuel injection
Nissan/Datsun 280-ZX (79-83)	6 Cyl SOHC	86.1 x 79.0 2760	(I) 44.2 (E) 35.3	8.3	91.3	14	3.32, 2.08, 1.31, 1.00 & 3.32, 2.08, 1.31, 1.00, 0.86	(F) 252 Vented Disc (R) 258or269 Solid Disc	2530	Nissan (Bosch) L-Jetronic fuel injection

ITS	Engine Type	Bore x Stroke(mm)/ Displ. (cc)	Valves IN & EX (mm)	Comp. Ratio	Wheel-base (inch)	Wheel Dia. (inch)	Gear Ratios	Brakes Std. (mm)	Weight (lbs)	Notes:
Nissan 200-SX V-6 (1987)	V-6 SOHC	87.0 x 83.0 2960	(I) 42.0 (E) 35.0	9.0	95.4	15	3.32, 1.90, 1.31, 1.00, 0.76	(F) 274 Disc (R) 290 Drum	2725	
Nissan 240-SX / S13 (91-94)	4 Cyl DOHC	89.0 x 96.0 2389	(I) 38.1 (E) 31.8	9.5	97.4	15 / 16	3.32, 1.90, 1.31, 1.00, 0.76	(F) 257 Disc (R) 258 Disc	2650	
Nissan 240-SX / S14 (95-98)	4 Cyl DOHC	89.0 x 96.0 2389	(I) 38.1 (E) 31.8	9.5	99.4	15 / 16	3.32, 1.90, 1.31, 1.00, 0.76	(F) 257 Vented Disc (R) 258 Solid Disc	2650	
Nissan 300-ZX (84-88)	6 Cyl SOHC	87.0 x 83.0 2960	(I) 42.0 (E) 35.0	9.0	91.3	15	3.35, 2.06, 1.38, 1.00, 0.78 or 3.32, 1.90, 1.31, 1.00, 0.76	(F) 274 Disc (R) 290 Disc	2725	Bosch L-Jetronic Fuel Injection
Nissan 300-ZX 2+2 (1986)	6 Cyl SOHC	87.0 x 83.0 2960	(I) 42.0 (E) 35.0	9.0	95.7	15	3.35, 2.06, 1.38, 1.00, 0.78 or 3.32, 1.90, 1.31, 1.00, 0.76	(F) 274 Disc (R) 290 Disc	2725	Bosch L-Jetronic Fuel Injection
Nissan Sentra SER Spec V (02-*06*)	4 Cyl DOHC	89.0 x 100.0 2488	(I) 35.8 (E) 30.8	9.6	99.8	17	3.15, 1.94, 1.39, 1.06, 0.81, 0.63	(F) 305 Vented Disc (R) 278 Solid Disc	2825	
Oldsmobile Achieva SCX (92-93)	4 Cyl DOHC	92.0 x 85.1 2263	(I) 36.6 (E) 31.5	10.0	103.4	14 / 15	3.50, 2.05, 1.38, 1.03, 0.81	(F) 259 Disc (R) 200 Drum	2655	Alternate rear bearing, flange and disc brakes from (Genereal Motors) Saturn are allowed. 16" wheel not allowed.
Oldsmobile Calais (88-89)	4 Cyl DOHC	92.0 x 85.1 2263	(I) 36.6 (E) 31.5	10.1	103.4	14 / 15	3.50, 2.05, 1.38, 0.94, 0.72 & 3.50, 2.19, 1.38, 1.03, 0.81	(F) 247 Disc (R) 201 x 46 Drum	2505	Alternate rear bearing, flange and disc brakes from (Genereal Motors) Saturn are allowed. 16" wheel not allowed.
Oldsmobile Calais (90-91)	4 Cyl DOHC	92.0 x 85.1 2263	(I) 36.6 (E) 31.5	10.1	103.4	14 / 15	3.50, 2.05, 1.38, 0.94, 0.72 & 3.50, 2.19, 1.38, 1.03, 0.81	(F) 247 Disc (R) 201 x 46 Drum	2655	Alternate rear bearing, flange and disc brakes from (Genereal Motors) Saturn are allowed. 16" wheel not allowed.

ITS	Engine Type	Bore x Stroke(mm)/ Displ. (cc)	Valves IN & EX (mm)	Comp. Ratio	Wheel-base (inch)	Wheel Dia. (inch)	Gear Ratios	Brakes Std. (mm)	Weight (lbs)	Notes:
Pontiac Grand-Am (Quad 4) (88-91)	4 Cyl DOHC	92.2 x 85.1 2272	(I) 36.6 (E) 31.5	10.1	103.4	14 / 15	3.50, 2.05, 1.38, 0.94, 0.72 & 3.50, 2.19, 1.38, 1.03, 0.81	(F) 247 Disc (R) 201 x 46 Drum	2505	Alternate rear bearing, flange and disc brakes from (Genereal Motors) Saturn are allowed. 16" wheel not allowed.
Pontiac Solstice (2006)	*4 cyl. DOHC*	*88.0 x 98.0 2384*	*(I) 35.25 (E) 30.25*	*10.9*	*95.1*	*18*	*3.75, 2.26, 1.37,1.00, 0.73*	*((F) 296.0x26 vented (R) 278.0x12 solid*	*2905*	*Classification effective 1/1/11*
Porsche 911 T & E (68-69)	6 Cyl SOHC	80.0 x 66.0 1991	(I) 42.0 (E) 38.0	9.1	1968: 87.0 1969: 89.3	14 / 15	3.09, 1.89, 1.32, 1.04, 0.79	(F) 282 Disc (R) 290 Disc	2385	
Porsche 911 T & E (70-71)	6 Cyl SOHC	84.0 x 66.0 2195	(I) 46.1 (E) 40.1	9.1	89.3	15	3.09, 1.89, 1.32, 1.04, 0.79	(F) 282 Disc (R) 290 Disc	2485	
Porsche 911 T & E (72-73)	6 Cyl SOHC	84.0 x 70.4 2341	(I) 46.1 (E) 40.1	8.0	89.3	15	3.09, 1.89, 1.32, 1.04, 0.79	(F) 282 Disc (R) 290 Disc	2585	
Porsche 924-S (86-88)	4 Cyl SOHC	100.0 x 78.9 2479	(I) 45.0 (E) 40.0	10.2	94.5	15 / 16	3.60, 2.13, 1.46, 1.07, 0.83	(F) 283 Disc (R) 289 Disc	2575	
Porsche 944 (2V) (83-88)	4 Cyl SOHC	100.0 x 78.9 2479	(I) 45.0 (E) 40.0	10.2	94.5	15 / 16	3.60, 2.13, 1.46, 1.07, 0.73 & 3.60, 2.13, 1.46, 1.07, 0.83	(F) 283 Disc (R) 289 Disc	2575	Maximum wheel size is 16 x 7 @ all 4 corners.
Porsche 944 2.7L (1989)	4 Cyl SOHC	104.0 x 78.9 2681	(I) 45.0 (E) 40.0	10.2	94.5	15 / 16	3.60, 2.13, 1.46, 1.07, 0.73 & 3.60, 2.13, 1.46, 1.07, 0.83	(F) 283 Disc (R) 289 Disc	2635	Maximum wheel size is 16 x 7 @ all 4 corners.
Porsche 944S (4V) (87-88)	4 Cyl DOHC	100.0 x 78.9 2479	(I) 37.0 (E) 33.0	10.9	94.5	15 / 16	3.50, 2.059, 1.40, 1.034, 0.829	(F) 282 Disc (R) 289 Disc	2850	

ITS	Engine Type	Bore x Stroke(mm)/ Displ. (cc)	Valves IN & EX (mm)	Comp. Ratio	Wheel-base (inch)	Wheel Dia. (inch)	Gear Ratios	Brakes Std. (mm)	Weight (lbs)	Notes:
Subaru Impreza 2.5 RS (98-01)	*4 Cyl SOHC*	*99.5 x 79.0 2457*	*(I) 36.5 (E) 32.0*	*10.0*	*99.2*	*16*	*3.55, 2.11, 1.45, 1.09, 0.78*	*(F) 277x24 vented (R) 266x10 solid*	*2660*	*Center differential must remain stock.*
Toyota Corolla XRS (2005)	*4 cyl. DOHC*	*82.0 x 85.0 1796*	*(I) 34.0 (E) 29.0*	*11.5:1*	*102.4*	*16*	*3.17, 2.05, 1.48,0.92, 0.73*	*((F) 275.0 vented (R) 254.0 solid*	*2590*	
Toyota MR2 Spyder (2001-03)	*4 cyl. DOHC*	*79.0 x 91.5 1794*	*(I) 32.0 (E) 27.5*	*10.0*	*96.5*	*15*	*3.17, 1.90, 1.39,1.03, 0.82*	*(F) 253.0x20 vented (R) 262.0x16 vented*	*2275*	
Toyota Supra (82-85)	6 Cyl DOHC	83.0 x 85.0 2759	(I) 44.0 (E) 36.0	9.2	103.0	14 / 15	3.29, 1.89, 1.28, 1.00, 0.78	(F) 256 Disc (R) 264 Disc	2750	
Toyota Supra (86 1/2-87)	6 Cyl DOHC	83.0 x 91.0 2954	(I) 32.0 (E) 27.5	9.2	102.2	16	3.29, 1.89, 1.28, 1.00, 0.78	(F) 299 Disc (R) 290 Disc	3380	
Triumph TR8 (80-82)	8 Cyl OHV	88.9 x 71.1 3528	(I) 39.9 (E) 34.3	8.1	85.0	13	3.32, 2.09, 1.39, 1.00, 0.83	(F) 249 Disc (R) 229 x 46 Drum	2610	(2) Stromberg 1V Carburetors or Lucas/Bosch L-Jetronic Injection Convertible allowed @2560 lbs.
Volkswagen Corrado SLC	V-6 DOHC	81.0 x 90.3 2782	(I) 39.0 (E) 34.2	10.0	97.3	15	3.30, 1.94, 1.31, 1.03, 0.84	(F) 280 Vented Disc (R) 226 Solid Disc	2680	
Volkswagen Golf GTI VR-6 (95-99.5)	V-6 DOHC	81.0 x 90.3 2782	(I) 39.0 (E) 34.2	10.0	97.3	15	3.30, 1.94, 1.31, 1.03, 0.84	(F) 280 Vented Disc (R) 226 Solid Disc	2680	
Volkswagen Jetta VR-6 (94-96)	V-6 DOHC	81.0 x 90.3 2782	(I) 39.0 (E) 34.2	10.0	97.3	15	3.30, 1.94, 1.31, 1.03, 0.84	(F) 280 Vented Disc (R) 226 Solid Disc	2680	
Volvo 850 GLT (93-97)	Inline 5 DOHC	83.0 x 90.0 2435		10.5	2665.0	15	3.38, 1.90, 1.19, 1.03, 0.84	(F) 279 Vented Disc (R) 292 Solid Disc	2635	

Notes:

ITA	Engine Type	Bore x Stroke(mm)/ Displ. (cc)	Valves IN & EX (mm)	Comp. Ratio	Wheel-base (inch)	Wheel Dia. (inch)	Gear Ratios	Brakes Std. (mm)	Weight (lbs)	Notes:
Acura Integra 1.6 (86-89)	4 Cyl DOHC	75.0 x 90.0 1590	(I) 30.0 (E) 27.0	9.3	96.5	14	3.18, 1.95, 1.29, 1.03, 0.85	(F) 242 Disc (R) 239 Disc	2200	
Acura Integra (90-93)	4 Cyl DOHC	81.0 x 89.0 1835	(I) 31.0 (E) 28.0	9.2	100.4	14	3.17, 1.86, 1.26, 0.94, 0.74	(F) 262 Disc (R) 239 Disc	2595	
Acura Integra GS/LS/RS(3 door) (94-00)	4 Cyl DOHC	81.0 x 89.0 1835	(I) 31.0 (E) 28.0	9.2	101.2	14	3.23, 1.9, 1.27, 0.97, 0.71	(F) 262 x 21 Vented Disc (R) 239 x 10 Solid Disc	2620	
AMC Spirit (79-83)	6 Cyl OHV	95.3 x 99.1 4235	(I) 45.5 (E) 35.9	8.3	96.0	14	3.98, 2.14, 1.42, 1.00 & 3.50, 2.21, 1.43, 1.00 & 4.04, 2.39, 1.49, 1.00	(F) 274 Disc (R) 254 Drum	2730	
Audi GT Coupe (1987)	5 Cyl SOHC	82.5 x 86.4 2309	(I) 39.5 (E) 31.0	8.0	99.8	14	2.85, 1.52, 0.97, 0.70, 0.54	(F) 256 Vented Disc (R) 245 x 10 Solid Disc	2490	
Audi Coupe Quattro (90-91)	*5 Cyl SOHC*	*86.0 x 86.0 2309*	*(I) 32.0 (E) 28.0*	*9.8*	*100.4*	*15*	*3.55, 2.11, 1.43, 1.03, 0.84*	*(F) 276 vented (R) 245 solid*	*3055*	*Center differential must remain stock.*
BMW 318 (E36) (92-94)	4 Cyl DOHC	84.0 x 81.0 1796		10.0	106.3	15	4.23, 2.52, 1.67, 1.22, 1.00	(F) 287 x 23 Vented Disc (R) 280 x 11 Solid Disc	2600	Trunk mounted fuel cell may be used but shall be no larger than stock.
BMW 318i/is Twin Cam (90-91)	4 Cyl DOHC	84.7 x 81.0 1799	(I) 33.0 (E) 30.5	10.0	101.2	14 / 15	3.72, 2.02, 1.32, 1.00, 0.81	(F&R) 259 Disc	2600	
BMW 318ti & Club Sport (1995)	4 Cyl DOHC	84.0 x 81.0 1796	(I) 33.0 (E) 30.5	10.0	106.3	15 / 16	4.23, 2.52, 1.67, 1.22, 1.00	(F) 286 Solid Disc (R) 272 Solid Disc	2600	

ITA	Engine Type	Bore x Stroke(mm)/ Displ. (cc)	Valves IN & EX (mm)	Comp. Ratio	Wheel-base (inch)	Wheel Dia. (inch)	Gear Ratios	Brakes Std. (mm)	Weight (lbs)	Notes:
BMW 318ti / Sport (96-99)	4 Cyl DOHC	85.1 x 83.6 1895	(I) 33.0 (E) 30.5	10.0	106.3	16	4.23, 2.52, 1.67, 1.22, 1.00	(F) 286 Solid Disc (R) 272 Solid Disc	2600	
BMW 318i/is (96-99)	4 Cyl DOHC	85.1 x 83.6 1895	(I) 33.0 (E) 30.5	10.0	106.3	15	4.23, 2.52, 1.67, 1.22, 1.00	(F) 286 Solid Disc (R) 272 Solid Disc	2600	
BMW 325e/es (2 & 4 door) (84-87)	6 Cyl SOHC	84.0 x 81.0 2693	(I) 40.0 (E) 34.0	9.0	101.2	14	ZF: 3.84, 2.20, 1.39, 1.00, 0.81 & Gertrag: 3.83, 2.20, 1.40, 1.00, 0.81	(F) 287 x 23 Vented Disc (R) 280 x 11 Solid Disc	2550	Trunk mounted fuel cell may be used but shall be no larger than stock.
BMW 2002tii (71-74)	4 Cyl SOHC	89.0 x 80.0 1990	(I) 46.0 (E) 38.0	9.0	98.4	13	3.76, 2.02, 1.32, 1.00	(F) 256 Disc (R) 230 Drum	2310	Kugelfischer Mechanical Fuel Injection
BMW Z3 1.9 (96-98)	4 Cyl DOHC	85.1 x 83.6 1895	(I) 33.0 (E) 30.5	10.0	96.3	16	4.23, 2.52, 1.66, 1.22, 1.00	(F) 286 Solid Disc (R) 272 Solid Disc	2600	
BMW 528e (82-87)	*6 cyl SOHC*	*81 x 84 2963*	*(I) 40.0 (E) 34.0*	*9.0*	*103.5*	*14*	*3.83, 2.20, 1.40, 1.00, 0.81*	*(F) 284 Disc (R) 284 Disc*	*2550*	
Buick Skyhawk V-6 (75-80)	6 Cyl OHV	96.6 x 86.4 3786	(I) 43.5 (E) 38.1	8.0	97.0	13	3.50, 2.48, 1.66, 1.00 & 3.11, 2.20, 1.47, 1.00 & 3.10, 1.89, 1.27, 1.00, 0.80 & 2.95, 1.94, 1.34, 1.00, 0.80	(F) 254 Disc (R) 242 Drum	2810	
Chevrolet Cavalier Z-24 (86-87)	6 Cyl OHV	89.0 x 76.0 2800	(I) 43.6 (E) 36.2	8.9	101.2	14	3.92, 2.04, 1.36, 0.92, 0.75	(F) 247 Disc (R) 200 Drum	2480	Alternate rear bearing, flange, and disc brakes from Saturn are allowed. 16" wheels not allowed.
Chevrolet Citation X-11 (81-83)	6 Cyl OHV	89.0 x 76.0 2800	(I) 43.6 (E) 36.2	8.9	104.9	14	3.31, 1.95, 1.24, 0.81	(F) 247 Disc (R) 200 Drum	2620	

ITA	Engine Type	Bore x Stroke(mm)/ Displ. (cc)	Valves IN & EX (mm)	Comp. Ratio	Wheel-base (inch)	Wheel Dia. (inch)	Gear Ratios	Brakes Std. (mm)	Weight (lbs)	Notes:
Chevrolet Corvair 140 (68-69)	6 Cyl OHV	87.3 x 74.7 2685	(I) 43.8 (E) 34.6	8.6	108.0	13	3.11, 2.20, 1.47, 1.00	(F & R) 242 Drum	2580	(4) Rochester Carburetors: (2) 7025023 & (2) 7026026, All w/1.375" venturi.
Chevrolet Cosworth Vega Twin Cam (75-76)	4 Cyl DOHC	88.9 x 80.3 1998		8.0	97.0	13	3.41, 2.08, 1.40, 1.00, 0.80	(F) 251 Disc (R) 242 Drum	2580	Bendix MPC Fuel injection
Chevrolet Monza V-6 (78-80)	6 Cyl OHV	96.6 x 86.4 3786	(I) 43.5 (E) 38.1	8.0	97.0	13	3.50, 2.48, 1.66, 1.00 & 3.11, 2.20, 1.47, 1.00 & 3.10, 1.89, 1.27, 1.00, 0.80 & 2.95, 1.94, 1.34, 1.00, 0.80	(F) 254 Disc (R) 242 Drum	2810	
Chrysler Neon SOHC (2&4 door) (incl. ACR) (95-99)	4 Cyl SOHC	87.5 x 83.0 1995	(I) 33.0 (E) 28.0	9.8	104.0	14	3.54, 2.12, 1.36, 1.03, 0.81 *3.54, 2.12, 1.36, 1.03, .72*	(F) 257 x 20 Disc (R) 257 x 9 Disc *or (F) 240 disc (R) 200mm drum*	2450	
Chrysler Neon DOHC (2 & 4 door) (incl. ACR) (95-99)	4 Cyl DOHC	87.5 x 83.0 1995	(I) 34.8 (E) 30.5	9.6	104.0	14	3.54, 2.12, 1.36, 1.03, 0.81 *3.54, 2.12, 1.36, 1.03, .72*	(F) 257 x 20 Disc (R) 257 x 9 Disc *or (F) 240 disc (R) 200mm drum*	2650	
Dodge Daytona (1986)	4 Cyl SOHC	87.5 x 104.0 2501	(I) 40.6 (E) 35.4	9.0	97.0	14	3.29, 2.08, 1.45, 1.04, 0.72	(F) 257 Disc	2620	
Dodge / Plymouth Neon RT & ACR (01-03)	4 Cyl SOHC	87.5 x 83.0 1995	(I) 34.9 (E) 28.5	9.8	103.0	15	3.50, 1.95, 1.36, 0.97, 0.81	(F) 257 Vented Disc (R) 270 Solid Disc	2670	

ITA	Engine Type	Bore x Stroke(mm)/ Displ. (cc)	Valves IN & EX (mm)	Comp. Ratio	Wheel-base (inch)	Wheel Dia. (inch)	Gear Ratios	Brakes Std. (mm)	Weight (lbs)	Notes:
Dodge / Plymouth Neon incl. SE, ES, SXT (00-03)	4 Cyl SOHC	87.5 x 83.0 1995	(I) 33.4 (E) 28.8	9.3	103.0	14	3.50, 1.95, 1.36, 0.97, 0.81	(F) 257 Vented Disc (R) 270 Solid Disc	*2345*	
Ford Escort GT/ LX-E 1.8L 16V (91-95)	4 Cyl DOHC	83.0 x 85.0 1839	(I) 33.0 (E) 28.0	9.0	98.4	14 / 15	3.30, 1.83, 1.31, 1.03, 0.79	(F) 235 Disc (R) 232 Disc	2325	
Ford Escort ZX2 (98-00)	4 Cyl DOHC	84.8 x 88.0 1988	(I) 32.0 (E) 28.0	10.0	98.4	15	3.32, 1.83, 1.23, 0.91, 0.72	(F) 259 Vented Disc (R) 228 Drum	2400	
Ford Focus ST (05-06)	*4 cyl. DOHC*	*87.38 x 94.0 2255*	*(I) 35.0 (E) 30.0*	*9.9*	*102.9*	*16*	*3.42, 2.14, 1.45,1.03, 0.77*	*(F) 277.9 vented (R) 251.0 solid*	*2680*	
Ford Focus ZX-3 (00-01)	4 Cyl DOHC	84.8 x 88.0 1988	(I) 32.0 (E) 28.0	9.6	103.0	15	3.67, 2.14, 1.45, 1.03, 0.77	(F) 258 Solid Disc (R) 252 Solid Disc or 203 Drum	2400	
Ford Mustang II V-6 (74-78)	6 Cyl OHV	93.0 x 68.6 2796	(I) 39.9 (E) 32.3	8.2	96.2	13	3.50, 2.21, 1.43, 1.00	(F) 237 Disc (R) 229 Drum	2840	
Ford Mustang V-6 (1979)	6 Cyl OHV	93.0 x 68.6 2796	(I) 39.9 (E) 32.3	8.7	100.4	14	3.98, 2.14, 1.42, 1.00	(F) 237 Disc (R) 229 Drum	3000	
Honda Accord EX (94-97)	4 Cyl SOHC	85.1 x 91.0 2157	(I) 34.0 (E) 29.0	8.8	106.9	15	3.29, 1.81, 1.19, 0.93, 0.69	(F) 259 Vented Disc (R) 228 Solid Disc	2735	
Honda Civic Del Sol Si (93-*95*)	4 Cyl SOHC	75.0 x 90.0 1590	(I) 30.0 (E) 26.0	9.2	93.3	14	3.25, 1.90, 1.25, 0.90, 0.75	(F) 240 Disc (R) 239 Disc	*2270*	Rear cage braces may pass through rear window.

ITA	Engine Type	Bore x Stroke(mm)/ Displ. (cc)	Valves IN & EX (mm)	Comp. Ratio	Wheel-base (inch)	Wheel Dia. (inch)	Gear Ratios	Brakes Std. (mm)	Weight (lbs)	Notes:
Honda Civic Del Sol Si (*96*-97)	4 Cyl SOHC	75.0 x 90.0 1590	(I) 30.0 (E) 26.0	9.2	93.3	14	3.25, 1.90, 1.25, 0.90, 0.75	(F) 240 Disc (R) 239 Disc	*2305*	Rear cage braces may pass through rear window.
Honda Civic Si (89-91)	4 Cyl SOHC	75.0 x 90.0 1590	(I) 29.0 (E) 25.0	9.1	98.4	14	3.25, 1.89, 1.26, 0.94, 0.77	(F) 242 Disc (R) 181 Drum	2250	PGM Fuel Injection
Honda Civic Si (92-95)	4 Cyl SOHC	75.0 x 90.0 1590	(I) 30.0 (E) 26.0	9.2	101.3	14	3.25, 1.90, 1.25, 0.91, 0.70	(F) 262 Disc (R) 201 Disc	*2270*	
Honda Civic EX Coupe (96-00)	4 Cyl SOHC	75.0 x 90.0 1590	(I) 30.0 (E) 26.0	9.6	103.2	14	3.25, 1.90, 1.25, 0.91, 0.70	(F) 262 Vented Disc (R) 201 Drum	2305	
Honda Civic EX Coupe/Sedan VTEC (92-95)	4 Cyl SOHC	75.0 x 90.0 1590	(I) 30.0 (E) 26.0	9.2	103.2	14	3.25, 1.90, 1.25, 0.91, 0.70	(F) 262 x 20 Vented Disc (R) 201 Drum or Solid Disc	*2270*	
Honda Civic EX (90-91)	4 Cyl SOHC	75.0 x 90.0 1590	(I) 29.0 (E) 25.0	9.1	98.4	14	3.25, 1.89, 1.26, 0.94, 0.77	(F) 262 Vented Disc (R) 181 Drum	2250	
Honda Civic Si (2002-2005)	*4 Cyl SOHC*	*82.5 x 86.4 1998*	*(I) 36.5 (E) 32.0*	*10.3*	*101.2*	*15*	*3.06, 1.77, 1.21, 0.92, 0.74*	*(F) 262 vented (R) 259 solid*	*2840*	
Honda CRX Si (88-91)	4 Cyl SOHC	75.0 x 90.0 1590	(I) 29.0 (E) 25.0	9.1	90.6	14	3.25, 1.89, 1.26, 0.94, 0.77	(F) 242 Disc (R) 181 Drum (R) 239 Disc	2250	
Honda CRX 1.5L (standard) (88-91)	4 Cyl SOHC	75.0 x 84.5 1493	(I) 29.0 (E) 25.0	9.2	90.6	13	(3.25, 1.65, 1.03, 0.82) or (3.25, 1.89, 1.26, 0.94, 0.77)	(F) 242 x 21 Vented Disc (R) 181 x 39 Drum	2000	
Honda Prelude-S (1992)	4 Cyl SOHC	85.1 x 95.0 2157	(I) 34.0 (E) 29.0	9.4	100.4	14	3.31, 1.86, 1.32, 1.03, 0.81	(F & R) 259 Disc	2680	
Honda Prelude Si (88-91)	4 Cyl	80.0 x 91.0 1950	(I) 30.0 (E) 35.0			14	3.181, 1.842, 1.250, 0.937, 0.771		2550	

ITA	Engine Type	Bore x Stroke(mm)/ Displ. (cc)	Valves IN & EX (mm)	Comp. Ratio	Wheel-base (inch)	Wheel Dia. (inch)	Gear Ratios	Brakes Std. (mm)	Weight (lbs)	Notes:
Honda Prelude Si (90-91)	4 Cyl DOHC	83.0 x 95.0 2056	(I) 33.1 (E) 28.1	9.4	101.0	13 / 14	3.31, 1.81, 1.29, 0.96, 0.81	(F) 214 Vented Disc (R) 208 Vented Disc	2550	
Isuzu Impulse (83-87)	4 Cyl OHC	87.0 x 82.0 1949		9.2	96.0	14			2855	
Mazda Cosmo (76-78)	2 Rotor	2616		9.2	99.0	14	3.68, 2.26, 1.40, 1.00, 0.86	(F) 204 Disc (R) 242 Drum	2780	
Mazda MX-3 V-6	V-6 DOHC	75.0 x 69.6 1844	(I) 28.5 (E) 23.1	9.2	96.3	15	3.31, 1.83, 1.31, 1.03, 0.80	(F) 257 Disc (R) 252 Disc	2510	
Mazda MX-5 / Miata (90-93)	4 Cyl DOHC	78.0 x 83.6 1597	(I) 31.1 (E) 26.3	9.4	89.2	14	3.14, 1.89, 1.33, 1.00, 0.81	(F) 235 Disc (R) 232 Disc	2255	
Mazda MX-5 / Miata includes R (94-97)	4 Cyl DOHC	83.0 x 85.0 1839	(I) 33.10 (E) 28.15	9.0	89.2	14	3.14, 1.89, 1.33, 1.00, 0.81	(F) 255 Disc (R) 251 Disc	2380	
Mazda Protege LX (90-93)	4 Cyl DOHC	83.0 x 85.0 1839	(I) 33.0 (E) 28.0	9.0	98.4	14	3.30, 1.83, 1.31, 1.03, 0.79	(F) 257 Vented Disc (R) 252 Solid Disc	2325	
Mazda Protege ES (95-98)	4 Cyl DOHC	83.0 x 85.0 1839	(I) 33.0 (E) 28.0	9.4	102.6	14	3.42, 1.84, 1.29, 1.02, 0.78	(F) 257 Vented Disc (R) 252 Solid Disc	2325	
Mazda Protege ES/LX (01-03)	4 Cyl DOHC	83.0 x 92.0 1991	(I) 31.5 (E) 27.6	9.1	102.8	15 / 16	3.31, 1.84, 1.31, 0.97, 0.76	(F) 259 Vented Disc (R) 259 Vented Disc	2305	
Mazda Protégé MP3 (2001)	*4 cyl. DOHC*	*83.0 x 92.0 1991*	*(I) 31.5 (E) 27.6*	*9.1*	*102.8*	*17*	*3.31, 1.84, 1.31, 0.97, 0.76*	*(F) 259x22 vented (R) 262x8 solid*	*2485*	
Mazda RX-2 (71-74)	2 Rotor	2292		9.4	97.2	13	3.68, 2.26, 1.40, 1.00, 0.86	(F) 232 Disc (R) 201 Drum	2300	

ITA	Engine Type	Bore x Stroke(mm)/ Displ. (cc)	Valves IN & EX (mm)	Comp. Ratio	Wheel-base (inch)	Wheel Dia. (inch)	Gear Ratios	Brakes Std. (mm)	Weight (lbs)	Notes:
Mazda RX-3 / 3SP (72-78)	2 Rotor	2292		9.4	91.0	13	3.74, 2.20, 1.44, 1.00, 0.79 & 3.74, 2.20, 1.44, 1.00, & 3.68, 2.26, 1.40, 1.00, 0.86 & 3.38, 2.00, 1.39, 1.00, 0.79	(F) 232 Disc (R) 201 Drum (R) 229 Drum	2280	
Mazda RX-4 (74-78)	2 Rotor	2616		9.2	99.0	13	3.68, 2.26, 1.40, 1.00 & 3.38, 2.08, 1.32, 1.00, 0.79	(F) 232 Disc (R) 229 Drum	2550	
Mazda RX-7 (12A) (79-85)	2 rotor	2292		9.4	95.3	13	3.68, 2.22, 1.43, 1.00, 0.83	(F) 227 Disc (R) 200 Drum (R) 236 Disc	2280	
Mazda 3*s* (04-*06*)	4 Cyl DOHC	87.5 x 94.0 2260	(I) 33.5 (E) 28.3	9.7	2639mm	17	3.31, 1.84, 1.31, 0.97, 0.76	(F) 300 Vented Disc (R) 280 Solid	2840	
Mercedes-Benz 190E 2.3L 8V	4 Cyl SOHC	95.5 x 80.3 2299	(I) 46.1 (E) 39.1	9.0	104.9	14 / 15	3.91, 2.17, 1.37, 1.00, 0.78	(F) 262 Disc (R) 258 Disc	2730	
Mercury Capri I V-6 72-74)	6 Cyl OHV	90.0 x 66.8 2550 93.0 x 68.5 2796	(I) 39.9 (E) 32.3	8.2	100.8	13	3.65, 1.97, 1.37, 1.00	(F) 244 Disc (R) 229 Drum	2390	
Mercury Capri II V-6 (76-77)	6 Cyl OHV	93.0 x 68.5 2796	(I) 39.9 (E) 32.3	8.2	100.8	13	3.65, 1.97, 1.37, 1.00	(F) 249 Disc (R) 229 Drum	2670	
Mercury Capri (91-94)	4 Cyl DOHC	78.0 x 83.6 1597	(I) 31.1 (E) 26.3	9.4	94.7	14 / 15	3.31, 1.83, 1.23, 0.97, 0.80	(F) 260 Vented Disc (R) 221 Solid Disc	2440	
Mercury Tracer LTS (91-96)	4 Cyl DOHC	83.0 x 85.0 1839	(I) 33.0 (E) 28.0	9.0	98.4	14	3.30, 1.83, 1.31, 1.03, 0.79	(F) 235 Disc (R) 232 Disc	2430	

ITA	Engine Type	Bore x Stroke(mm)/ Displ. (cc)	Valves IN & EX (mm)	Comp. Ratio	Wheel-base (inch)	Wheel Dia. (inch)	Gear Ratios	Brakes Std. (mm)	Weight (lbs)	Notes:
Merkur Scorpio (87-89)	V-6 OHV	93.0 x 72.0 2935	(I) 46.0 (E) 36.0	9.2	108.0	15	3.36, 1.81, 1.26, 1.00, 0.83	(F) 260 Vented Disc (R) 260 Solid Disc	2815	
Mitsubishi Eclipe / Eagle Talon (95-98)	4 Cyl DOHC	87.5 x 83.0 1997	(I) 34.93 (E) 30.63	9.6	98.8	14	3.54, 2.13, 1.36, 1.03, 0.81	(F) 204 Vented Disc (R) 222 Solid Disc or 231 x 41.3 Drum	2600	
Nissan 200 SX SE-R (95-98)	4 Cyl DOHC	86.0 x 86.0 1998	(I) 34.2 (E) 30.2	9.5	95.7	15	3.06, 1.83, 1.29, 0.98, 0.76	(F) 247 Vented Disc (R) 234 Solid Disc	2490	
Nissan 240-SX / S13 (89-90)	4 Cyl SOHC	89.0 x 96.0 2389	(I) 34.0 (E) 40.0	9.5	97.4	15	3.32, 1.90, 1.31, 1.00, 0.76	(F) 252 Disc (R) 258 Disc	2630	Front brake discs may be stock 257 x 22mm ABS discs w/ 4-lug hub & ABS front calipers.
Nissan NX-2000 (91-93)	4 Cyl DOHC	86.0 x 86.0 1998	(I) 34.2 (E) 30.2	9.5	95.7	14	3.06, 1.83, 1.29, 0.98, 0.76	(F) 257 Disc (R) 234 Disc	2515	
Nissan Sentra SE-R (91-94)	4 Cyl DOHC	86.0 x 86.0 1998	(I) 34.2 (E) 30.2	9.5	95.7	14	3.06, 1.83, 1.29, 0.98, 0.76	(F) 249 Disc (R) 234 Disc	2490	
Nissan Pulsar NX (87-91)	4 Cyl DOHC	76.0 x 88.0 1597	(I) 37.0 (E) 30.0	9.4		13	3.06, 1.83, 1.21, 0.90, 0.76	(F) 258 Disc (R) 203 Drum	2250	KN13 engine
Plymouth Laser / Eagle Talon / Mitsubishi Eclipse 2.0L (90-94)	4 Cyl DOHC	85.0 x 88.0 1997	(I) 34.0 (E) 30.5	9.0	97.2	13	3.36, 1.95, 1.29, 0.94, 0.76	(F & R) 264 Disc	2500	
Pontiac Fiero GT & Formula V-6 2.8 (85-88)	6 Cyl OHV	89.0 x 76.0 2837	(I) 43.7 (E) 36.3	8.5	93.4	14 / 15	3.50, 2.05, 1.38, 0.94, 0.72 & 3.31, 1.95, 1.24, 0.81	(F) 260 or 247 Disc (R)260 or 247 Disc	2600	"Petty Bar" style cage is permitted. Rear cage braces may pass through rear window.
Porsche 912-E (1976)	4 Cyl OHV	94.0 x 71.0 1971	(I) 42.0 (E) 36.0	7.6	89.4	15	3.18, 1.83, 1.26, 0.96, 0.72	(F) 282 Disc (R) 290 Disc	2480	

ITA	Engine Type	Bore x Stroke(mm)/ Displ. (cc)	Valves IN & EX (mm)	Comp. Ratio	Wheel-base (inch)	Wheel Dia. (inch)	Gear Ratios	Brakes Std. (mm)	Weight (lbs)	Notes:
Porsche 914-6 (70-72)	4 Cyl OHV	80.0 x 66.0 / 1991	(I)42.0 (E)38.0	8.6	96.5	15	3.09, 1.78, 1.22, 0.93, 0.76	(F)282.5 x 20 Vented Disc (R)286 x 10.5 Solid Disc	2095	
Saab 900 16V (B212i) (91-92)	4 Cyl DOHC	2118							2680	
Saturn SC Coupe & SC2 (91-96)	4 Cyl DOHC	82.0 x 90.0 1901	(I) 32.3 (E) 27.4	9.5	99.2	15	3.25, 2.01, 1.42, 1.03, 0.73	(F) 251 x 18 Vented Disc (R) 245 x 11 Solid Disc or 200 x 30 Drum	2330	
Saturn SL2 (91-95)	4 Cyl DOHC	82.0 x 90.0 1901	(I) 32.3 (E) 27.4	9.5	102.4	15	3.25, 2.01, 1.42, 1.03, 0.73	(F) 251 x 18 Vented Disc (R) 245 x 11 Solid Disc or 200 x 30 Drum	2360	
Saturn SC1 & SC2 Coupe (1997)	4 Cyl DOHC	82.0 x 90.0 1901	(I) 32.3 (E) 27.4	9.5	102.4	15	3.25, 2.01, 1.42, 1.03, 0.73	(F) 251 x 18 Vented Disc (R) 245 x 11 Solid Disc or 200 x 30 Drum	2360	
Toyota Celica Supra (79-81)	6 Cyl DOHC	83.0 x 85.0 2759		8.8	102.9	14	3.29, 1.89, 1.28, 1.00, 0.79		2930	
Toyota Celica GTS (86-88)	4 Cyl DOHC	86.0 x 86.0 1998	(I) 33.5 (E) 29.0	9.2	94.5	14	3.59, 2.02, 1.38, 1.00, 0.86	(F) 232 Disc (R) 231 Disc	2500	
Toyota Celica GT Coupe/ Liftback (89-93)	4 Cyl DOHC	87.0 x 91.0 2164	(I) 32.0 (E) 27.0	9.5	99.4	14	3.29, 2.04, 1.32, 1.03, 0.82	(F) 255 Disc (R) 201 Drum	2590	
Toyota Celica GTS Coupe & HB (1989)	4 Cyl DOHC	86.0 x 86.0 1998	(I) 33.5 (E) 29.0	9.2	99.4	14	3.29, 2.04, 1.32, 1.03, 0.82	(F) 258 Disc (R) 269 Disc	2615	

ITA	Engine Type	Bore x Stroke(mm)/ Displ. (cc)	Valves IN & EX (mm)	Comp. Ratio	Wheel-base (inch)	Wheel Dia. (inch)	Gear Ratios	Brakes Std. (mm)	Weight (lbs)	Notes:
Toyota Celica GT Liftback / Coupe (94-99)	4 Cyl DOHC	87.0 x 91.0 2164	(I) 32.0 (E) 27.0	9.5	100.0	15	3.29, 1.96, 1.32, 1.03, 0.82	(F) 273 Vented Disc (R) 267 Solid Disc	2400	
Toyota Celica (00-*05*)	4 Cyl DOHC	79.0 x 91.5 1794	NA	10.0	2703	15	3.17, 1.90, 1.39, 1.03, 0.82	(F)254 Vented Disc (R)192 Drum	2490	
Toyota Corolla GTS (88-92)	4 Cyl DOHC	81.0 x 77.0 1587	(I) 30.7 (E) 26.0	9.4	94.5	14	3.59, 2.02, 1.38, 1.00, 0.86	(F & R) 231 Disc	2300	
Toyota MR-2 (90-94)	4 Cyl DOHC	87.0 x 91.0 2164	(I) 32.0 (E) 27.0	9.5	94.5	14	3.29, 1.96, 1.32, 1.03, 0.82	(F) 258 Disc (R) 263 Disc	2545	Rear cage braces may pass through the rear window.
Triumph GT-6 Mk.III (70-74)	6 Cyl OHV	74.2 x 76.0 1998	(I) 36.5 (E) 32.0	9.25	83.0	13	2.65, 1.78, 1.25, 1.00, 0.80	(F) 247 Disc (R) 203 Drum	2005	(1) Stromberg 150CP
Triumph TR6 (69-76)	6 Cyl OHV	74.7 x 95.0 2498	(I) 36.83 (E) 32.00	8.5	88.0	15	3.14, 2.01, 1.33, 1.00	(F) 273 Disc (R) 228.6 Drum	2060	
Volkswagen Golf GTI 16V (87-89)	4 Cyl DOHC	81.0 x 86.4 1780		10.0	97.3	14	3.45, 2.12, 1.44, 1.13, 0.91	(F & R) 245 Disc	2220	
Volkswagen Golf GTI 2.0 16V (90-92)	4 Cyl DOHC	82.5 x 92.8 1984	(I) 32.0 (E) 28.0	10.0	97.3	15	3.45, 2.12, 1.44, 1.13, 0.91	(F & R) 245 Disc	2475	
Volkswagen Jetta GLI 16V (87-89)	4 Cyl DOHC	81.0 x 86.4 1780		10.0	94.5	14	3.45, 2.12, 1.44, 1.13, 0.89	(F) 239 Disc (R) 180 x 30 Drum	2280	
Volkswagen Jetta GLI (91-92)	4 Cyl DOHC	82.5 x 92.8 1984	(I) 32.0 (E) 28.0	10.0	97.3	15	3.45, 2.12, 1.44, 1.13, 0.91	(F) 256 Disc (R) 245 Disc	2475	
Volkswagen Scirocco 16V (86-88)	4 Cyl DOHC	81.0 x 86.4 1780		10.0	94.5	14	3.45, 2.12, 1.44, 1.13, 0.91	(F) 256 Disc (R) *226* Disc	2320	

ITB	Engine Type	Bore x Stroke(mm)/ Displ. (cc)	Valves IN & EX (mm)	Comp. Ratio	Wheel-base (inch)	Wheel Dia. (inch)	Gear Ratios	Brakes Std. (mm)	Weight (lbs)	Notes:
Alfa Romeo Alfetta GT, GTV, Sprint Veloce (75-79)	4 Cyl DOHC	84.0 x 88.5 1962	(I) 44.2 (E) 40.2	9.0	95	14	3.30, 2.00, 1.37, 1.04, 0.83	(F) 261 Disc (R) 249 Disc	2520	
Alfa Romeo Alfetta Sedan (75-79)	4 Cyl DOHC	84.0 x 88.5 1962	(I) 44.0 (E) 41.0	9.0	98.8	14	3.30, 2.00, 1.37, 1.04, 0.83	(F) 261 Disc (R) 249 Disc	2605	
Alfa Romeo GTV2000 (72-75)	4 Cyl DOHC	84.0 x 88.5 1962	(I) 44.0 (E) 41.0	9.0	92.5	14	3.30, 2.00, 1.37, 1.04, 0.83	(F) 261 Disc (R) 267 Disc	2410	
Alfa Romeo all Spider models (72-89)	4 Cyl DOHC	84.0 x 88.5 1962	(I) 44.0 (E) 41.0	9.0	88.6	14	3.30, 2.00, 1.37, 1.04, 0.83	(F) 268 Disc (R) 263 Disc	2400	77-81 SPICA Mech. fuel injection, 82- Bosch L-Jetronic injection 5.
Alfa Romeo Spider Quadrifoglio (85-89)	4 Cyl DOHC	84.0 x 88.5 1962	(I) 44.0 (E) 41.0	9.0	88.6	15	3.30, 2.00, 1.37, 1.04, 0.83	(F) 268 Disc (R) 263 Disc	2400	
Alfa Romeo all Spider models (90-94)	4 Cyl DOHC	84.0 x 88.5 1962	(I) 44.0 (E) 41.0	10.0	88.6	14 / 15	3.30, 2.00, 1.37, 1.04, 0.83	(F) 268 Disc (R) 263 Disc	2400	
Audi 4000 & 4000S (1986)									2500	
Audi 5+5 (81-83)	5 Cyl SOHC	79.5 x 86.4 2144 81.0 x 86.4 2226	(I) 38.0 (E) 31.0	8.0	99.8	14	2.85, 1.52, 0.97, 0.70, 0.54	(F) 239 Disc (R) 200 Disc	2490	
Audi Coupe (81-84)	5 Cyl SOHC	79.5 x 86.4 2144 81.0 x 86.4 2226	(I) 38.0 (E) 31.0 2226: (E) 33.0	8.0 2226: 8.5	99.8	14	2.85, 1.52, 0.97, 0.70, 0.54 or 3.45, 1.70, 1.10, 0.75, 0.60, or 3.46, 1.94, 1.29, 0.97, 0.80	(F) 239 Disc (R) 200 x 40 Drum	2490	

ITB	Engine Type	Bore x Stroke(mm)/ Displ. (cc)	Valves IN & EX (mm)	Comp. Ratio	Wheel-base (inch)	Wheel Dia. (inch)	Gear Ratios	Brakes Std. (mm)	Weight (lbs)	Notes:
Audi GT Coupe (84-86)	5 Cyl SOHC	81.0 x 86.4 2226	(I) 38.0 (E) 33.0	8.5	99.8	14	3.45, 1.70, 1.10, 0.75, 0.60 or 3.45, 1.70, 1.06, 0.77, 0.60 or 2.85, 1.52, 1.07, 0.78, 0.64	(F) 256 Vented Disc (R) 200 x 40 Drum	2540	
BMW 318i (84-86)	4 Cyl SOHC	89.0 x 71.0 1767	(I) 44.0 (E) 38.0	9.3/9.0	101.2	14	3.72, 2.02, 1.32, 1.00, 0.81	(F) 261 Disc (R) 229 Drum	2395	Trunk mounted fuel cell may be used but shall be no larger than stock.
BMW 320i 1.8 (80-83)	4 Cyl SOHC	89.0 x 71.0 1767	(I) 44.0 (E) 38.0	8.8	100.9	13	3.68, 2.00, 1.33, 1.00, 0.80	(F) 254 Disc (R) 250 Drum	2460	Trunk mounted fuel cell may be used but shall be no larger than stock.
BMW 320i 2.0 (77-79)	4 Cyl SOHC	89.0 x 80.0 1990	(I) 44.0 (E) 38.0	8.1	100.9	13	3.76, 2.02, 1.32, 1.00	(F) 254 Disc (R) 250 Drum	*2340*	Trunk mounted fuel cell may be used but shall be no larger than stock.
BMW 2002 (68-76)	4 Cyl SOHC	89.0 x 80.0 1990	(I) 44.0 (I) 46.0 w/ E12 head (E) 38.0	8.5	98.4	13	3.76, 2.02, 1.32, 1.00	(F) 240 Disc (R) 232 Drum	2280	
Dodge Charger / 024 (81-85)	4 Cyl SOHC	87.5 x 92.0 2213	(I) 40.6 (E) 35.4	9.0	96.6	13 / 14	3.29, 1.89, 1.21, 0.88 or 3.29, 1.89, 1.21, 0.88, 0.72 or 3.29, 2.08, 1.45, 1.04, 0.72	(F) 228 Disc (R) 200 Drum	2320	
Dodge Shelby Charger (83-84)	4 Cyl SOHC	87.5 x 92.0 2213	(I) 40.6 (E) 35.4	9.6	96.5	15	3.29, 2.08, 1.45, 1.04, 0.72	(F) 256 Disc (R) 200 Drum	*2290*	
Dodge Colt GT 2.0 (76-77)	4 Cyl SOHC	84.0 x 90.0 1995	(I) 41.9 (E) 34.0	8.5	95.3	13	3.37, 2.04, 1.36, 1.00, 0.86	(F) 229 Disc (R) 229 Drum	2280	
Dodge Daytona 2.2 (84-89)	4 Cyl SOHC	87.5 x 92.0 2213	(I) 40.6 (E) 35.4	9.0	96.6	14	3.29, 2.08, 1.45, 1.04, 0.72	(F) 257 Disc (R) Drum	2630	
Dodge Omni 2.2 (80-90)	4 Cyl SOHC	87.5 x 92.0 2213	(I) 40.6 (E) 35.4	9.0	99.2	13 / 14	3.45, 1.94, 1.29, 0.97 or 3.29, 1.89, 1.21, 0.88 or 3.29, 1.89, 1.21, 0.88, 0.72 or 3.29, 2.08, 1.45, 1.04, 0.72	(F) 229 Disc (R) 201 Drum	*2290*	

ITB	Engine Type	Bore x Stroke(mm)/ Displ. (cc)	Valves IN & EX (mm)	Comp. Ratio	Wheel-base (inch)	Wheel Dia. (inch)	Gear Ratios	Brakes Std. (mm)	Weight (lbs)	Notes:
Dodge Omni GLH 2.2	*4 Cyl SOHC*	*87.5 x 92.0 2213*	*(I) 40.6 (E) 35.4*	*9.6*	*99.1*	*15*	*3.29, 2.08, 1.45, 1.04, 0.72*	*(F) 256 Disc (R) 200 Drum*	*2430*	
Dodge Shadow (89-91)	4 Cyl SOHC	87.5 x 92.0 2213	(I) 40.6 (E) 35.4	9.5	97.2	14 / 15	3.29, 2.08, 1.45, 1.04, 0.72	(F) 259 Disc (R) 200 Drum	2680	Bosch/Holley TBI
Dodge Stratus (95-00)	4 Cyl SOHC	87.5 x 83.0 1995	(I) 33.0 (E) 28.0	9.8	108.0	15	3.54, 2.13, 1.36, 1.03, 0.72	(F) 254 Vented Disc (R) 229 Solid Disc	2870	
Fiat 124 Spider 2.0 (79-83)	4 Cyl DOHC	84.0 x 90.0 1995	(I) 41.7 (E) 36.3	8.5	89.7	13 / 14	3.67, 2.10, 1.36, 1.00, 0.88	(F & R) 227 Disc	2330	Weber 28/32 DHA Carburetor, Bosch L-Jetronic injection, Bosch CIS injection
Fiat Brava 2.0 (79-81)	4 Cyl DOHC	84.0 x 90.0 1995	(I) 41.7 (E) 36.3	8.1	98.0	13	3.61, 2.04, 1.35, 1.00, 0.87	(F) 227 Disc (R) 229 Drum	2530	79-mid 80: Weber 28/32 ADHA carburetor, Mid 80 on: Bosch CIS injection
Fiat 124 1800 (Spider & Coupe) (74-78)	4 Cyl DOHC	84.0 x 79.2 1756	(I) 41.7 (E) 36.3	8.0	89.7	13	3.67, 2.10, 1.36, 1.00, 0.88 or 3.61, 2.05, 1.36, 1.00, 0.87	(F & R) 227 Disc	2230	
Ford Capri I 2.0	4 Cyl SOHC	91.0 x 77.0 1993	(I) 42.2 (E) 36.2	9.2	100.8	13	3.65, 1.97, 1.37, 1.00	(F) 244 Disc (R) 229 Drum	2300	
Ford Escort/ GT 1.9 (86-90)	4 Cyl SOHC	82.0 x 88.0 1859	(I) 42.0 (E) 37.0 or (I) 39.0 (I) 34.0	9.0	94.2	13 / 14 / 15	3.21, 1.81, 1.15, 0.78 or 3.60, 2.12, 1.39, 1.02, 0.75 or 3.60, 2.12, 1.39, 1.02, 0.77	(F) 235 Vented Disc (R) 180 or 203 Drum	2280	
Ford Escort EXP (86-88)	4 Cyl SOHC	82.0 x 88.0 1859	(I) 42.0 (E) 37.0	9.5	94.3	14 / 15	3.60, 2.12, 1.39, 1.02, 0.77 or 0.75	(F) 235 x 24 Vented disc (R) 180 Solid Disc	2415	

ITB	Engine Type	Bore x Stroke(mm)/ Displ. (cc)	Valves IN & EX (mm)	Comp. Ratio	Wheel-base (inch)	Wheel Dia. (inch)	Gear Ratios	Brakes Std. (mm)	Weight (lbs)	Notes:
Ford Mustang 2.3 (79-93)	4 Cyl SOHC	96.0 x 79.4 2301	(I) 44.1 (E) 38.1	9.5	100.4	13 / 14 / 15	3.98, 2.14, 1.42, 1.00 or 3.98, 2.14, 1.49, 1.00 or 4.07, 2.57, 1.66, 1.00 or 3.72, 2.23, 1.48, 1.00, 0.76 or 3.97, 2.34, 1.46, 1.00, 0.79 or 4.05, 2.43, 1.48, 1.00, 0.82	(F) 237 or 255.5 Disc (R) 229 Drum	2550	
Ford Mustang II 2.3 (74-78)	4 Cyl SOHC	96.0 x 79.4 2301	(I) 44.1 (E) 38.1	9.0	96.2	13	3.98, 2.14, 1.42, 1.00	(F) 237 Disc (R) 229 Drum	2830	
Ford Pinto 2.0 (71-74)	4 Cyl SOHC	91.0 x 77.0 1993		8.6	94.0	13	3.65, 1.97, 1.37, 1.00	(F) 237 Disc (R) 229 Drum	2230	
Ford Pinto 2.3 (74-80)	4 Cyl SOHC	96.0 x 79.4 2301	(I) 44.1 (E) 38.1	9.0	94.5	13	3.98, 2.14, 1.42, 1.00 or 3.65, 1.97, 1.37, 1.00	(F) 237 Disc (R) 229 Drum	2340	
Ford Probe GL/ LX 2.2L non-turbo (89-92)	4 Cyl SOHC	86.0 x 94.0 2184	(I) 32.5 (E) 34.0	8.6	99.0	14	3.31, 1.83, 1.23, 0.91, 0.71	(F) 264 Vented Disc (R) 228.6 Drum	2530	
Geo Prism GSi (1990)	4 Cyl DOHC	81.0 x 77.0 1588	(I) 30.5 (E) 25.4	10.3	95.7	14	3.17, 1.90, 1.31, 0.97, 0.82	(F) 259 Disc (R) 242 Disc	2455	
Geo Storm GSi (90-91)	4 Cyl DOHC	80.0 x 79.0 1588	(I) 31.0 (E) 28.0	9.8	96.5	14 / 15	3.91, 2.15, 1.45, 1.03, 0.83	(F) 248 Disc (R) 200 Drum	2380	
Honda Accord 1.7L (79-83)	4 Cyl SOHC	77.0 x 94.0 1751	(I) 34.1 (E) 28.1	8.8	93.7	13	3.18, 1.84, 1.20, 0.90, 0.72 or 3.38, 2.80, 2.38, 1.56, 0.97	(F) 191 Disc (R) 193 Drum	2270	
Honda Accord Lxi 12V Coupe & HB (86-89)	4 Cyl SOHC	82.7 x 91.0 1955	(I) 30.1 (E) 35.1	9.3	102.4	13 / 14	3.181, 1.842, 1.208, 0.878, 0.694	(F) 240 or 214 Disc (R) 200 x 42.5 Drum	2550	

ITB	Engine Type	Bore x Stroke(mm)/ Displ. (cc)	Valves IN & EX (mm)	Comp. Ratio	Wheel-base (inch)	Wheel Dia. (inch)	Gear Ratios	Brakes Std. (mm)	Weight (lbs)	Notes:
Honda Accord SE-i (1989)	4 Cyl SOHC	82.7 x 91.0 1955	(I) 30.1 (E) 35.1	9.3	102.4	14	3.181, 1.842, 1.208, 0.878, 0.694	(F) 240 or 214 Disc (R) 240 Disc	2550	
Honda Civic Si (86-87)	4 Cyl SOHC	74.0 x 86.5 1488	(I) 27.1 (E) 33.0	8.7	93.7	13	2.92, 1.76, 1.81, 0.85, 0.71	(F) 231 Disc (R) 180 Drum	2130	PGM Fuel Injection
Honda Civic Del Sol S (93-95)	*4 Cyl SOHC*	*75.0 x 84.5 1493*	*(I) 29.0 (E) 25.0*	*9.2*	*93.3*	*13*	*3.25, 1.76, 1.17, 0.91, 0.70*	*(F) 240 Disc (R) 180 Drum*	*2345*	*Rear cage braces may pass through rear window.*
Honda Civic DX (sedan & HB) (88-91)	4 Cyl SOHC	75.0 x 84.5 1493	(I) 29.0 (E) 25.0	9.2	98.4	13	3.25, 1.89, 1.26, 0.94, 0.77	(F) 242 x 21 Vented Disc (R) 181 x 39 Drum	2110	
Honda Civic DX (2&4 door) (92-95)	4 Cyl SOHC	75.0 x 84.5 1493	(IN) 29.0 (EX) 25.0	9.2	*2 & 4 door: 103.2 3 door: 101.3*	13	3.25, 1.76, 1.17, 0.91, 0.70	(F) 240 x 21 Vented Disc (R) 180 Drum	2345	
Honda Civic DX (3 door) (92-95)	*4 Cyl SOHC*	*75.0 x 84.5 1493*	*(IN) 29.0 (EX) 25.0*	*9.2*	*2 & 4 door: 103.2 3 door: 101.3*	*13*	*3.25, 1.76, 1.17, 0.91, 0.70*	*(F) 240 x 21 Vented Disc (R) 180 Drum*	*2345*	
Honda CRX Si (84-87)	4 Cyl SOHC	74.0 x 86.5 1488	(I) 27.1 (E) 33.1	8.7	86.6	13 / 14	2.92, 1.76, 1.18, 0.85, 0.71	(F) 231 Disc (R) 180 Dum	2130	Plastic front fenders, nose, lower body segments (Aero package) permitted. PGM fuel injection.
Honda CRX HF 1.5L (88-91)	4 Cyl SOHC	75.0 x 84.5 1493	(I) 29.0 (E) 25.0	9.6	90.6	13	3.25, 1.65, 1.03, 0.92, 0.69	(F) 231 x 17 Solid Disc (R) 180 x 39 Drum	2030	
Honda Prelude 1.8 (83-87)	4 Cyl SOHC	80.0 x 91.0 1829	(I) 30.0 (E) 35.0	9.1	96.5	13 / 14	3.18, 1.94, 1.25, 0.93, 0.76	(F) 229 Disc (R) 237 Disc	2350	

ITB	Engine Type	Bore x Stroke(mm)/ Displ. (cc)	Valves IN & EX (mm)	Comp. Ratio	Wheel-base (inch)	Wheel Dia. (inch)	Gear Ratios	Brakes Std. (mm)	Weight (lbs)	Notes:
Honda Prelude Si (86-87)	4 Cyl SOHC	82.7 x 91.0 1955	(I) 30.1 (E) 35.1	8.8	96.5	13	3.181, 1.842, 1.250, 0.937, 0.771	(F) 207 Vented Disc (R) 208 Solid Disc	2450	
Isuzu Stylus XS (1991)	4 Cyl OHC	80.0 x 79.0 1588	(I) 31.0 (E) 28.0	9.8	96.5	14	3.91, 2.15, 1.45, 1.00, 0.83	(F) 246 Disc (R) 254 Disc	2430	
Mazda 323 1.6 (1989)	4 Cyl SOHC	78.0 x 83.6 1597	(I) 38.1 (E) 32.1	9.3	94.5	14	3.42, 1.84, 1.29, 0.92, 0.73	(F) 238 Disc (R) 200 Drum	2190	
Mazda 323 1.6 (86-88)	4 Cyl SOHC	78.0 x 83.6 1597	(I) 38.1 (E) 32.1	9.3	94.5	13 / 14	3.42, 1.84, 1.29, 0.92, 0.73 or 3.42, 1.84, 1.29, 0.92	(F) 238 Disc (R) 200 Drum	2060	
Mazda 626 (83-84)	4 Cyl SOHC	86.0 x 86.0 1998	(I) 44.0 (E) 36.0	8.6	98.8	14	3.31, 1.83, 1.23, 0.97, 0.80	(F) 231 Disc (R) 229 Drum	2300	
Mazda 626 DX/LX (93-97)	4 Cyl DOHC	83.0 x 92.0 1991	(I) 31.6 (E) 27.7	9.0	102.8	14	3.31, 1.83, 1.23, 0.91, 0.72	(F) 258 Vented Disc (R) 261 Solid Drum	2550	
Mazda MX-6 (88-91)	4 Cyl SOHC	86.1 x 94.0 2189	(I) 32.5 (E) 34.0	8.6	99.0	14	3.31, 1.83, 1.23, 0.91, 0.72	(F) 265 Disc	2530	
Mazda Protege ES (99-00)	4 Cyl DOHC	83.0 x 85.0	(I) 31.5 (E) 27.6	9.1	102.8	15	3.42, 1.84, 1.29, 1.03, 0.78	(F) 258 Vented Disc (R) 200 Drum	2645	
Mercury Bobcat 2.3 (74-80)	4 Cyl SOHC	96.0 x 79.4 2301	(I) 44.1 (E) 38.1	9.0	94.5	13	3.98, 2.14, 1.42, 1.00 or 3.65, 1.97, 1.37, 1.00	(F) 237 Disc (R) 229 Drum	2520	
Mercury Capri 2.3 (79-86)	4 Cyl SOHC	96.0 x 79.4 2301	(I) 44.1 (E) 38.1	9.5	100.4	13 / 14	3.98, 2.14, 1.42, 1.00 or 3.98, 2.14, 1.49, 1.00 or 4.07, 2.57, 1.66, 1.00 or 3.72, 2.23, 1.48, 1.00, 0.76 or 4.05, 2.43, 1.48, 1.00, 0.82	(F) 237 or 255.5 Disc (R) 229 Drum	2550	

ITB	Engine Type	Bore x Stroke(mm)/ Displ. (cc)	Valves IN & EX (mm)	Comp. Ratio	Wheel-base (inch)	Wheel Dia. (inch)	Gear Ratios	Brakes Std. (mm)	Weight (lbs)	Notes:
MGB 1.8 (68-80)	4 Cyl OHV	80.3 x 89.0 1798	(I) 41.4 (E) 34.3	8.8	91.0	14	3.64, 2.21, 1.37, 1.00, 0.79 (0.82 or 0.88), or 3.44, 2.17, 1.38, 1.00	(F) 273 Disc (R) 254 Drum	2050	68-72: (2) SU HS4 Carburetors, 73-74: (2) SU HIF Carburetors, 75-80: (1) Zenith/Stromberg Carburetor.
MGB GT 1.8 (68-74)	4 Cyl OHV	80.3 x 89.0 1798	(I) 41.4 (E) 34.3	8.8	91.0	14	3.64, 2.21, 1.37, 1.00, 0.79 (0.82 or 0.88)	(F) 273 Disc (R) 254 Drum	2100	(2) SU HS4 Carburetors.
Mini Cooper *(02-06)*	4 Cyl SOHC	77.0 x 85.8 1598	(I) 30.3 (E) 23.3	10.6	97.1	15 / 16	3.42, 1.95, 1.33, 1.05, 0.85	(F) 276 Vented Disc (R) 239 Solid Disc	2500	
Nissan/Datsun 200-SX / S10 (L20) (77-79)	4 Cyl SOHC	85.1 x 86.1 1952	(I) 42.1 (E) 35.2	8.5	92.0	13	3.38, 2.01, 1.31, 1.00, 0.85	(F) 244 Disc (R) 229 Drum	2350	
Nissan/Datsun 200-SX / S10 (Z20) (80-81)	4 Cyl SOHC	85.1 x 86.1 1952	(I) 42.2 (E) 38.2	8.5	94.5	14	3.32, 2.08, 1.31, 1.00, 0.86	(F) 254 Disc (R) 270 Disc	2530	
Nissan/Datsun 200-SX / S11 (Z22) (82-83)	4 Cyl SOHC	87.0 x 92.0 2187	(I) 42.2 (E) 38.2	8.5	94.5	14	3.59, 2.24, 1.41, 1.00, 0.81	(F) 254 Disc (R) 270 Disc	2705	
Nissan/Datsun 200-SX / S12 (CA20) (84-86)	4 Cyl SOHC	84.5 x 88.0 1974	(I) 41.2 (E) 35.2	8.5	95.5	14 / 15	3.59, 2.24, 1.41, 1.00, 0.81 or 3.59, 2.08, 1.36, 1.00, 0.81	(F) 254 Disc (R) 270 Disc	2530	
Nissan/Datsun HL-510 2.0 (78-81)	4 Cyl SOHC	85.1 x 86.1 1952	(I) 42.1 (E) 35.2	8.5	94.5	13	3.17, 1.92, 1.31, 1.00, 0.85 or 3.38, 2.01, 1.31, 1.00, 0.85	(F) 247 Disc (R) 229 Drum	2280	
Nissan/Datsun 610 (1973)	4 Cyl SOHC	85.0 x 78.0 1770	(I) 42.2 (E) 35.2	8.5	98.4	13	3.38, 2.01, 1.31, 1.00	(F) 232 Disc (R) 229 Drum	2450	

ITB	Engine Type	Bore x Stroke(mm)/ Displ. (cc)	Valves IN & EX (mm)	Comp. Ratio	Wheel-base (inch)	Wheel Dia. (inch)	Gear Ratios	Brakes Std. (mm)	Weight (lbs)	Notes:
Nissan/Datsun 610 (74-76)	4 Cyl SOHC	85.1 x 86.1 1952	(I) 42.2 (E) 35.2	8.5	98.4	13	3.38, 2.01, 1.31, 1.00	(F) 232 Disc (R) 229 Drum	2450	
Nissan Sentra / B12 (1989)	4 Cyl SOHC	76.0 x 88.0 1597	(I) 29.0 (E) 32.8	9.4	95.7	14	3.33, 1.96, 1.29, 0.90, 0.76	(F) 239 Disc (R) 204 Drum	2165	
Nissan Sentra E/XE/CXE/SL/ Limited Edition (91-94)	4 Cyl DOHC	76.0 x 88.0 1597	(I) 34.0 (E) 24.0	9.5	95.7	13	3.33, 1.96, 1.29, 0.93, 0.73	(F) 239 Disc (R) 258 Disc	2520	
Opel 1900 Sedan (71-75)	4 Cyl SOHC	93.0 x 69.9 1897	(I) 40.0 (I) 42.0 (E) 34.0	7.6	95.7	13	3.43, 2.16, 1.37, 1.00	(F) 247 Disc (R) 229 Drum	2180	
Opel GT 1900 (69-73)	4 Cyl SOHC	93.0 x 69.9 1897	(I) 40.0 (I) 42.0 (E) 34.0	9.0	95.7	13	3.43, 2.16, 1.37, 1.00	(F) 247 Disc (R) 229 Drum	2180	(1) Solex 32 DIDTA-4 Carburetor
Opel Manta 1.9 (71-75)	4 Cyl SOHC	93.0 x 69.9 1897	(I) 40.0 (I) 42.0 (E) 34.0	7.6	95.7	13	3.43, 2.16, 1.37, 1.00	(F) 247 Disc (R) 229 Drum	2230	(1) Solex 32 DIDTA-4 Carburetor or Bosch L-Jetronic injection
Plymouth Fire Arrow 2.6 (79-80)	4 Cyl SOHC	91.0 x 98.0 2555	(I) 43.0 (E) 35.0	8.2	92.1	13	3.37, 2.04, 1.36, 1.00, 0.86	(F) 226 Disc (R) 229 Disc	2360	
Plymouth Horizon 2.2 (80-90)	4 Cyl SOHC	87.5 x 92.0 2213	(I) 40.6 (E) 35.4	9.0	99.2	13 / 14	3.45, 1.94, 1.29, 0.97 or 3.29, 1.89, 1.21, 0.88 or 3.29, 1.89, 1.21, 0.88, 0.72 or 3.29, 2.08, 1.45, 1.04, 0.72	(F) 229 Disc (R) 201 Drum	2320	
Plymouth TC3 / Turismo 2.2 (81-85)	4 Cyl SOHC	87.5 x 92.0 2213	(I) 40.6 (E) 35.4	9.0	96.6	13 / 14	3.29, 1.89, 1.21, 0.88 or 3.29, 1.89, 1.21, 0.88, 0.72 or 3.29, 2.08, 1.45, 1.04, 0.72	(F) 229 Disc (R) 201 Drum	2320	

ITB	Engine Type	Bore x Stroke(mm)/ Displ. (cc)	Valves IN & EX (mm)	Comp. Ratio	Wheel-base (inch)	Wheel Dia. (inch)	Gear Ratios	Brakes Std. (mm)	Weight (lbs)	Notes:
Pontiac Fiero 2.5 (84-87)	4 Cyl OHV	101.6 x 76.2 2471	(I) 43.7 (E) 36.3	9.0	93.4	13 / 14	3.53, 1.95, 1.24, 0.84 or 3.73, 2.04, 1.45, 1.03, 0.74	(F) 247 Disc (R) 256 Disc	2315	GM Throttle body injection. "Petty Bar" style cage is permitted. Rear cage braces may pass through rear window.
Pontiac Fiero 2.5 (1988)	4 Cyl OHV	101.6 x 76.2 2471	(I) 43.7 (E) 36.3	9.0	93.4	13 / 14	3.53, 1.95, 1.24, 0.84 or 3.73, 2.04, 1.45, 1.03, 0.74	(F) 247 Disc (R) 256 Disc	2315	GM Throttle body injection. "Petty Bar" style cage is permitted. Rear cage braces may pass through rear window.
Porsche 914-4 1.8 (74-75)	4 Cyl OHV	93.0 x 66.0 1795	(I) 40.9 (E) 34.0	7.3	96.5	15	3.09, 1.89, 1.26, 0.93, 0.71	(F) 280 Disc (R) 282 Disc	2080	"Petty Bar" style cage is permitted. Rear cage braces may pass through rear window.
Porsche 914-4 2.0L (73-76)	4 Cyl OHV	94.0 x 71.0 1971	(I) 42.0 (E) 36.0	7.6	96.5	15	3.09, 1.89, 1.26, 0.93, 0.71	(F) 280 Disc (R) 282 Disc	2260	Torsion bar front suspension. "Petty Bar" style cage is permitted. Rear cage braces may pass through rear window.
Porsche 924 & Sebring (77-82)	4 Cyl SOHC	86.5 x 84.4 1984	(I) 38.0 (I) 40.0 (E) 33.0	8.0 8.5 9.0	94.5	14 / 15	3.60, 2.13, 1.36, 0.97, 0.73	(F) 257 Disc (R) 232 Drum (F) 282 Disc (R) 290 Disc	2495	
Renault Alliance GTA (1987)	4 Cyl SOHC	3.23 x 3.66 1965	(I) 38.5 (E) 32.5	9.5		15	3.09, 1.84, 1.32, 0.97, 0.76	(F) 239 Disc (R) 204 Drum	2140	
Saab 900 (79-88)	4 Cyl SOHC	90.0 x 78.0 1985	(I) 42.0 (E) 35.5	9.3	99.1	15	3.54, 2.00, 1.34, 0.96, 0.78 or 3.80, 2.15, 1.44, 1.04, 0.84	(F) 278 Disc (R) 268 Disc (R) 258 Disc	2680	Bosch K or L-Jetronic injection
Saab 900 16V B202i (86-90)	4 Cyl DOHC	90.0 x 78.0 1985	(I) 32.0 (E) 29.0	10.2	99.0	15	3.80, 2.15, 1.44, 1.04, 0.84	(F) 276 Disc (R) 276.5 Disc	2680	
Saab 99E (1972)	4 Cyl SOHC	87.0 x 78.0 1854		9.0	97.4	15	3.39, 2.15, 1.45, 0.95	(F & R) 270 Disc	2637	Bosch injection
Saab 99EMS 2.0 (73-80)	4 Cyl SOHC	90.0 x 78.0 1985	(I) 42.0 (E) 35.5	9.0	97.4	15	3.44, 2.07, 1.39, 1.00 or 3.57, 2.08, 1.39, 1.00 or 3.31, 2.00, 1.34, 0.98	(F) 280 Disc (R) 270 Disc	2540	Bosch injection

ITB	Engine Type	Bore x Stroke(mm)/ Displ. (cc)	Valves IN & EX (mm)	Comp. Ratio	Wheel-base (inch)	Wheel Dia. (inch)	Gear Ratios	Brakes Std. (mm)	Weight (lbs)	Notes:
Suzuki Swift GT/GTi (89-94)	4 Cyl DOHC	73.9 x 75.4 1299	(I) 36.0 (E) 30.0	10.0	89.2	14	3.42, 1.89, 1.28, 0.91, 0.76	(F) 248 Vented Disc (R) 237 Solid Disc	1895	
Suzuki Swift GA (89-94)	4 Cyl DOHC	73.9 x 75.4 1299	(I) 36.0 (E) 30.0	10.0	89.2	14	3.42, 1.89, 1.28, 0.91, 0.76	(F) 229 x 17 Vented Disc (R) 180 x 25 Drum	1735	
Toyota Celica I 2.0L (71-73)	4 Cyl SOHC	88.5 x 80.1 1968		8.5	95.5	13	3.58, 2.08, 1.40, 1.00	(F) 232 Disc (R) 228 x 40.6 Drum	2350	
Toyota Celica I 2.2 (74-77)	4 Cyl SOHC	88.5 x 89.0 2189	(I) 43.0 (E) 36.6	8.4	95.5	13	3.29, 2.04, 1.39, 1.00, 0.85	(F) 232 Disc (R) 228 Drum	2300	
Toyota Celica II 2.2 (78-80)	4 Cyl SOHC	88.5 x 89.0 2189	(I) 43.0 (E) 36.6	8.4	98.4	14	3.29, 2.04, 1.39, 1.00, 0.85	(F) 254 Disc (R) 229 Drum	2430 (CP) 2490 (HB)	
Toyota Celica II 2.4 (81-82)	4 Cyl SOHC	92.0 x 89.0 2366	(I) 45.0 (E) 37.0	9.0	98.4	14	3.57, 2.06, 1.39, 1.00, 0.85	(F) 254 Disc (R) 229 Drum	2470 (CP) 2510 (HB)	
Toyota Celica III 2.4 (83-85)	4 Cyl SOHC	92.0 x 89.0 2366	(I) 45.0 (E) 37.0	9.0	98.4	14	3.29, 1.89, 1.28, 1.00, 0.78	*(F) 257 x 20 Vented (R) 264 Solid*	2350	(1) Aisan 2 bbl or Bosch L-Jetronic injection
Toyota Celica III GTS (83-85)	4 Cyl SOHC	92.0 x 89.0 2366	(I) 45.0 (E) 37.0	9.0	98.4	14	3.29, 1.89, 1.28, 1.00, 0.78	(F) 256 Disc (R) 229 Drum	2425	Bosch L-Jetronic injection
Toyota Celica ST (1986)	4 Cyl SOHC	84.0 x 90.0 1995		8.7	99.4	13	3.29, 2.04, 1.32, 1.03, 0.82	(F) 241 Disc (R) 200 Drum	2480	
Toyota Corolla 1.8 (80-82)	4 Cyl OHV	85.0 x 78.0 1770	(I) 41.9 (E) 35.9	9.1	94.5	13	3.59, 2.02, 1.39, 1.00, 0.86	(F) 226 Disc (R) 228 Drum	2050	

ITB	Engine Type	Bore x Stroke(mm)/ Displ. (cc)	Valves IN & EX (mm)	Comp. Ratio	Wheel-base (inch)	Wheel Dia. (inch)	Gear Ratios	Brakes Std. (mm)	Weight (lbs)	Notes:
Toyota Corolla SR-5 (1987)	4 Cyl SOHC	81.0 x 77.0 1587		9.0	94.5	13		(F) 226 Disc (R) 228 Drum	2330	
Toyota Corolla GTS (84-87)	*4 Cyl DOHC*	*81.0 x 77.0 1587*	*(I) 30.7 (E) 26.0*	*9.0*	*95.0*	*14*	*3.59, 2.02, 1.38, 1.00, 0.86*	*(F & R) 231 Disc*	*2475*	
Toyota FX-16 (1987)	4 Cyl DOHC	81.0 x 77.0 1587	(I) 30.7 (E) 26.0	9.4	95.7	14	3.17, 1.90, 1.31, 0.97, 0.82	(F & R) 244 Disc	2445	
Toyota MR-2 1.6L (85-89)	4 Cyl DOHC	81.0 x 77.0 1587	(I) 30.7 (E) 26.0	9.4	91.3	14	3.17, 1.90, 1.31, 0.97, 0.82 & 3.23, 1.91, 1.26, 0.92, 0.73	(F) 244 Disc (R) 239 Disc (F) 257 Disc (R) 262 Disc	2525	Factory aero package allowed (wing & skirts). Trunk mounted fuel cell with no larger capacity than stock is permitted. "Petty Bar" style cage is permitted. Rear cage braces may pass through rear window.
Triumph TR-7 2.0 (76-81)	4 Cyl SOHC	90.3 x 78.0 1998	(I) 39.6 (E) 32.5	8.0	85.0	13	3.32, 2.08, 1.39, 1.00, 0.83 or 2.65, 1.78, 1.25, 1.00	(F) 248 Disc (R) 229 Drum	2440 (CP) 2420 (Conv.)	
Volkswagen Golf III (93-97)	4 Cyl SOHC	82.5 x 92.8 1984		10.0	97.3	14	3.45, 1.94, 1.29, 0.97, 0.80 or 3.45, 1.94, 1.37, 1.03, 0.85	(F) 257 Disc (R) 227 Disc or 200 Drum	2350	
Volkswagen Golf 2.0 (99-03)	4 Cyl DOHC	82.5 x 92.8 1984	(I) 39.5 (E) 32.9	10.0	98.9	15	3.78, 2.12,1.36, 1.03, 0.84	(F) 280 Disc (R) 232 Disc	2350	
Volkswagen Golf GTI / GT / GL (85-92)	4 Cyl SOHC	81.0 x 86.4 1780	(I) 40.0 (E) 33.0	10.0	97.3	13 / 14	3.45, 2.12, 1.44, 1.13, 0.89	(F & R) 244 Disc or (R) 244 Drum	2280	Includes 1985 Golf Cup cars prepared to IT specifications.
Volkswagen Jetta/ GL / GLI (85-92)	4 Cyl SOHC	81.0 x 86.4 1780	(I) 40.0 (E) 33.0	10.0	97.3	13 / 14	3.45, 2.12, 1.44, 1.13, 0.89	(F) 244 Disc (R) 244 Disc or Drum	2280	
Volkswagen Jetta III (93-97)	4 Cyl SOHC	82.5 x 92.8 1984		10.0	97.3	14	3.46, 1.94, 1.21, 0.97, 0.81	(F) 257 Disc (R) 227 Disc or 200 Drum	2350	

ITB	Engine Type	Bore x Stroke(mm)/ Displ. (cc)	Valves IN & EX (mm)	Comp. Ratio	Wheel-base (inch)	Wheel Dia. (inch)	Gear Ratios	Brakes Std. (mm)	Weight (lbs)	Notes:
Volkswagen Rabbit GTI (83-84)	4 Cyl SOHC	81.0 x 86.4 1780	(I) 40.0 (E) 33.0	8.5	94.5	14	3.45, 2.12, 1.44, 1.13, 0.91	(F) 239 Disc (R) 180 Drum	2080	Bosch K-Jetronic injection
Volkswagen Scirocco II 8V (83-88)	4 Cyl SOHC	81.0 x 86.4 1780	(I) 40.0 (E) 33.0	8.5	94.5	13 / 14	3.45, 2.12, 1.44, 1.13, 0.91	(F) 239 Disc (R) 180 Drum	2130	Bosch K-Jetronic injection.
Volvo 142 / 144 2.0 (69-74)	4 Cyl OHV	88.9 x 80.0 1986	(I) 44.0 (E) 35.0	10.5	103.0	15	3.13, 1.99, 1.36, 1.00, 0.80 & 3.13, 1.99, 1.36, 1.00	(F) 272 Disc (R) 295 Disc	2640	
Volvo 240 2.3 (83-85)		96.0 x 80.0 2320		10.3	104.3	14 / 15	4.03, 2.16, 1.37, 1.00, 0.80 or 4.03, 2.16, 1.37, 1.00, 0.82	(F) 262 Vented (R) 280 Solid	2780	
Volvo 242 / 244 2.0 (1975)	4 Cyl OHV	88.9 x 80.0 1986	(I) 44.0 (E) 35.0	8.7	104.0	14	3.13, 1.99, 1.36, 1.00, .79	(F) 262 Vented (R) 280 Solid	2780	
Volvo 242 / 244 2.1 (76-82)	4 Cyl SOHC	92.0 x 80.0 2127	(I) 44.0 (E) 35.0	9.3	104.0	14 / 15	3.71, 2.16, 1.37, 1.00, 0.80	(F) 262 Vented (R) 280 Solid	2780	Bosch CIS injection

ITC	Engine Type	Bore x Stroke(mm)/ Displ. (cc)	Valves IN & EX (mm)	Comp. Ratio	Wheel-base (inch)	Wheel Dia. (inch)	Gear Ratios	Brakes Std. (mm)	Weight (lbs)	Notes:
Austin-Healey Sprite (68-69)	4 Cyl OHV	71.0 x 81.0 1275	(I) 33.2 (E) 30.6	8.8	80	13	3.20, 1.92, 1.34, 1.00	(F) 211 Disc (R) 178 Drum	1615	
BMW 1600 (68-71)	4 Cyl SOHC	84.0 x 71.0 1573	(I) 42.0 (E) 35.0	8.6	98.4	13	3.84, 2.05, 1.35, 1.00	(F) 257 Disc (R) 232 Drum	2160	One barrel manifold
Chevrolet Chevette 1.6 (76-87)	4 Cyl SOHC	82.0 x 75.7 1598	(I) 39.1 (E) 32.1	8.6	94.3	13	3.75, 2.16, 1.38, 1.00 or 4.13, 2.50, 1.48, 1.00, 0.86	(F) 246 Disc (R) 201 Drum	2130	
Dodge Colt (89-92)	4 Cyl SOHC	75.5 x 82.0 1468	(I) 35.0 (E) 30.0	9.4	93.9	13	3.36, 1.95, 1.29, 0.94, 0.78	(F) 232 Disc (R) 181 Drum	2270	
Dodge Colt 1.6 (FWD) (79-84)	4 Cyl SOHC	76.9 x 86.0 1597	(I) 38.3 (E) 31.3	8.5	90.6	13	4.23, 2.37, 1.47, 1.11 or 3.27, 1.83, 1.14, 0.86	(F) 227 Disc (R) 229 Drum	2040	
Dodge Colt 1.6 (RWD) (71-78)	4 Cyl SOHC	76.9 x 86.0 1597	(I) 38.3 (E) 31.3	8.5	92.1	13	3.21, 2.00, 1.31, 1.00, 0.85 or 3.53, 2.19, 1.44, 1.00	(F) 227 Disc (R) 229 Drum	2190	
Fiat X-1/9 1.3 (74-78)	4 Cyl SOHC	86.0 x 55.5 1290	(I) 36.2 (E) 31.2	8.5	86.7	13	3.58, 2.24, 1.45, 0.96 or 3.58, 2.24, 1.45, 0.85	(F & R) 227 Disc	2090	Trunk mounted fuel cell with no larger capacity than stock is allowed. "Petty Bar" style cage is permitted. Rear cage braces may pass through the rear window.
Fiat Bertone & X-1/9 1.5L (79-87)	4 Cyl SOHC	86.4 x 63.9 1498	(I) 36.0 (E) 33.0	8.5	86.7	13	3.58, 2.24, 1.45, 0.85 or 3.58, 2.24, 1.45, 1.04, 0.86 or 3.58, 2.24, 1.46, 1.03, 0.86	(F & R) 227 Disc	2150	79-80 Carburetor, Mid-80 Bosch L-Jetronic injector. Trunk mounted fuel cell with no larger capacity than stock is allowed. "Petty Bar" style cage is permitted. Rear cage braces may pass through the rear window.
Fiat 124 Coupe (70-73)	4 Cyl DOHC	80.0 x 79.2 1592 80.0 x 80.0 1608	(I) 41.7 (E) 36.3	8.0 / 8.5	95.3	13	3.80, 2.18, 1.41, 1.00, 0.91 or 3.67, 2.10, 1.36, 1.00, 0.88	(F & R) 227 Disc	2200	
Fiat 124 Spider (70-73)	4 Cyl DOHC	80.0 x 79.2 1592 80.0 x 80.0 1608	(I) 41.7 (E) 36.3	8.0 / 8.5	89.7	13	3.67, 2.10, 1.36, 1.00, 0.88 or 3.61, 2.05, 1.36, 1.00, 0.87	(F & R) 227 Disc	2170	

ITC	Engine Type	Bore x Stroke(mm)/ Displ. (cc)	Valves IN & EX (mm)	Comp. Ratio	Wheel-base (inch)	Wheel Dia. (inch)	Gear Ratios	Brakes Std. (mm)	Weight (lbs)	Notes:
Fiat 128 Coupe	4 Cyl SOHC	86.0 x 55.5 1290	(I) 36.0 (E) 31.0	8.5	87.5	13	3.583, 2.235, 1.454, 0.959	(F) 227 Solid Disc (R) 185.4 Drum	1950	
Ford Cortina GT (68-70)	4 Cyl OHV	80.97 x 77.62 1598			98.0	13			1780	
Ford Escort EXP (82-85)	4 Cyl SOHC	80.0 x 79.5 1598	(I) 42.0 (E) 37.0	9.0	94.2	13	3.60, 2.12, 1.39, 1.02 or 3.58, 2.05, 1.36, 0.95	(F) 236 Disc (R) 203 Drum	2130	
Ford Escort / GT (81-85)	4 Cyl SOHC	80.0 x 79.5 1598	(I) 42.0 (E) 37.0	8.8	94.3	13	3.21, 1.81, 1.15, 0.78 or 3.60, 2.12, 1.39, 1.02, 0.75 or 3.60, 2.12, 1.39, 1.02, 0.77	(F) 236 Disc (R) 203 Drum	2100	
Ford Festiva (88-93)	4 Cyl OHV	71.0 x 83.6 1324		1989: 8.6 1990: 9.7	90.2	13 / 12	3.45, 1.94, 1.28, 0.86	(F) 218 Disc (R) 170 Drum	1870	Induction: 89: Carburetion, 90: Fuel Injection.
Ford Fiesta (78-80)	4 Cyl OHV	81.0 x 78.0 1598	(I) 35.8 (E) 31.5	9.0	90.0	13 / 12	3.58, 2.06, 1.29, 0.88	(F) 221 Disc (R) 178 Drum	1780	
Geo Spectrum (1989)	4 Cyl SOHC	77.0 x 79.0 1481		9.6	86.8	13		(F) 239 Disc (R) 180 Drum	2020	
Geo Storm 1.6L (90-93)	4 Cyl SOHC	80.0 x 79.0 1588	(I) 28.0 (E) 32.0	9.8	96.5	15	3.909, 2.150, 1.448, 1.027, 0.829	(F) 247 Disc (R) 200 x 25 Drum	2355	
Honda Accord 1.6 (76-78)	4 Cyl SOHC	74.0 x 93.0 1599	(I) 35.1 (E) 28.1	8.0	93.7	13	3.18, 1.82, 1.18, 0.84, 0.71	(F) 188 Disc (R) 180 Drum	2180	
Honda Civic 1.2 (73-79)	4 Cyl SOHC	72.0 x 76.0 1237	EB1&2: (I) 34.0 (E) 30.0 EB3: (I) 36.0 (E) 32.0	8.3	86.8	13 / 12	3.00, 1.79, 1.18, 0.85 or 3.18, 1.82, 1.18, 0.85, 0.66	(F) 229 Disc (R) 180 Drum	1710	

ITC	Engine Type	Bore x Stroke(mm)/ Displ. (cc)	Valves IN & EX (mm)	Comp. Ratio	Wheel-base (inch)	Wheel Dia. (inch)	Gear Ratios	Brakes Std. (mm)	Weight (lbs)	Notes:
Honda Civic CVCC 1.5 (75-79)	4 Cyl SOHC	74.0 x 86.5 1488	(I) 35.0 (E) 29.0	8.1	86.6	13 / 12	3.00, 1.74, 1.13, 0.78, 0.66 or 3.18, 1.82, 1.18, 0.85 or 3.18, 1.82, 1.18, 0.85, 0.71	(F) 229 Disc (R) 180 Drum	1820	
Honda Civic CVCC (80-83)	4 Cyl SOHC	74.0 x 86.5 1488	(I) 35.1 (E) 28.1	9.3	88.6	13	2.92, 1.76, 1.18, 0.85, 0.71 or 3.18, 1.82, 1.18, 0.85, 0.71	(F) 229 Disc (R) 180 Drum	1870	
Honda Civic standard (HB & Sedan) (88-91)	4 Cyl SOHC	75.0 x 84.5 1493	(I) 29.0 (E) 25.0	9.2	98.4	13	3.25, 1.65, 1.03, 0.82	(F) 240 Disc (R) 180 Drum	2140	
Honda Civic HB / Sedan (84-87)	4 Cyl SOHC	74.0 x 86.5 1488	(I) 27.1 (E) 32.1	9.6	93.7	13	2.92, 1.76, 1.18, 0.85, 0.71	(F) 231 Disc (R) 180 Drum	1955	CVCC Cylinder head
Honda Civic CX (3-door HB) (92-95)	4 Cyl SOHC	75.0 x 84.5 1493	(I) 29.0 (E) 25.0	9.1	101.2	13	3.25, 1.76, 1.07, 0.85, 0.70	(F) 240 x 21 Vented Disc (R) 180 Drum	2170	
Honda CRX 1.5 (84-87)	4 Cyl SOHC	74.0 x 86.5 1488	(I) 27.1 (E) 32.1	9.6	86.6	13	2.92, 1.76, 1.18, 0.85, 0.71	(F) 231 Disc (R) 180 Drum	1955	Plastic front fenders, nose, lower body segments. CVCC Cylinder head.
Hyundai Excel (86-94)	4 Cyl SOHC	75.5 x 82.0 1469	(I) 35.0 (E) 30.0	9.4	93.9	13	3.36, 1.95, 1.29, 0.94	(F) 242 x 19 Vented Disc (R) 182 x 45 Drum	2370	
Isuzu (Buick/ Opel) I-Mark (76-82)	4 Cyl SOHC	84.0 x 82.0 1817	(I) 42.4 (E) 34.0	8.5	94.3	13	3.51, 2.17, 1.42, 1.00 or 3.79, 2.18, 1.42, 1.00, 0.86	(F) 237 Disc (R) 229 Drum	2280	
Isuzu I-Mark (88-89)	4 Cyl SOHC	77.0 x 79.0 1471		9.6	94.6	13	3.73, 2.04, 1.33, 0.92, 0.74 or 3.27, 2.04, 1.45, 1.03, 0.83	(F) 225 Disc (R) 180 Drum	2130	
Mazda GLC (RWD) (1980)	4 Cyl SOHC	77.0 x 76.0 1415	(I) 36.0 (E) 31.0	9.0	91.1	13	3.66, 2.19, 1.43, 1.00 or 3.66, 2.19, 1.43, 1.00, 0.83	(F) 207 Disc (R) 200 Drum	2080	

ITC	Engine Type	Bore x Stroke(mm)/ Displ. (cc)	Valves IN & EX (mm)	Comp. Ratio	Wheel-base (inch)	Wheel Dia. (inch)	Gear Ratios	Brakes Std. (mm)	Weight (lbs)	Notes:
Mazda GLC (FWD) (81-85)	4 Cyl SOHC	77.0 x 80.0 1490	(I) 36.0 (E) 31.0	9.0	93.1	13	3.42, 1.95, 1.29, 0.92, 0.73	(F) 226 Disc (R) 180 Drum	2000	
Mazda MX-3 (92-93)	*4 cyl. SOHC*	*78.0 x 83.6 1598*	*(I) 29.5 (E) 23.54*	*9.0*	*96.3*	*13*	*3.42, 1.84, 1.29,0.92, 0.73*	*((F) 258.0x22.2 vented (R) 200.0x35 drum*	*2070*	
Mazda Protege SE/DX (90-94)	4 Cyl SOHC	83.0 x 85.0 1839	(I) 30.0 (E) 25.0	8.9	98.4	13	3.31, 1.83, 1.23, 0.91, 0.71	(F) 235 Vented Disc (R) 200 Drum	2375	
Mercury LN7 (82-85)	4 Cyl SOHC	80.0 x 79.5 1598	(I) 42.0 (E) 37.0	9.0	94.2	13	3.60, 2.12, 1.39, 1.02 or 3.58, 2.05, 1.36, 0.95	(F) 236 Disc (R) 203 Drum	2130	
Mercury Lynx 1.6 (81-84)	4 Cyl SOHC	80.0 x 79.5 1598	(I) 42.0 (E) 37.0	8.8	94.3	13	3.58, 2.05, 1.23, 0.81	(F) 236 Disc (R) 203 Drum	2100	
MG Midget (68-74)	4 Cyl OHV	71.0 x 81.0 1275	(I) 33.2 (E) 30.6	8.8	80.0	13	3.20, 1.92, 1.34, 1.00	(F) 211 Disc (R) 180 Drum	1615	
MG Midget Mk III (75-79)	4 Cyl OHV	73.7 x 87.5 1491	(I) 36.6 (E) 29.7	8.0	80.0	13	3.41, 2.11, 1.43, 1.00	(F) 211 Disc (R) 180 Drum	1740	
Mitsubishi Mirage (1989)	4 Cyl SOHC	75.5 x 82.0 1468	(I) 35.0 (E) 30.0	9.4	93.9	13	3.36, 1.95, 1.29, 0.94, 0.78	(F) 231 Disc (R) 180 Drum	2270	
Nissan/Datsun 1200 (71-73)	4 Cyl OHV	73.0 x 70.0 1171		9.0	90.6	13 / 12	3.76, 2.17, 1.40, 1.00	(F) 213 Disc (R) 198 Drum	1740	
Nissan/Datsun 210 1.4 (79-82)	4 Cyl OHV	76.0 x 77.0 1397	(I) 37.2 (E) 30.0	8.9	92.1	13	3.51, 2.17, 1.39, 1.00 or 3.51, 2.17, 1.32, 1.00, 0.82	(F) 245 Disc (R) 203 Drum	2080	
Nissan/Datsun 210 1.5 (79-82)	4 Cyl OHV	76.0 x 82.0 1488	(I) 35.0 (E) 30.0	8.9	92.1	13	3.51, 2.17, 1.39, 1.00 or 3.51, 2.17, 1.32, 1.00, 0.82	(F) 245 Disc (R) 203 Drum	2080	

ITC	Engine Type	Bore x Stroke(mm)/ Displ. (cc)	Valves IN & EX (mm)	Comp. Ratio	Wheel-base (inch)	Wheel Dia. (inch)	Gear Ratios	Brakes Std. (mm)	Weight (lbs)	Notes:
Nissan/Datsun B210 (74-78)	4 Cyl OHV	76.0 x 77.0 1397	(I) 37.2 (E) 30.0	8.5	92.1	13	3.51, 2.17, 1.39, 1.00 or 3.51, 2.17, 1.32, 1.00, 0.82	(F) 245 Disc (R) 203 Drum	2010	
Nissan/Datsun PL-510 (68-73)	4 Cyl SOHC	83.0 x 73.7 1595	(I) 41.9 (E) 33.0	8.5	95.3	13	3.38, 2.01, 1.31, 1.00	(F) 231 Disc (R) 229 Drum	2170	
Nissan Pulsar NX (83-86)	4 Cyl SOHC	76.0 x 88.0 1597	(I) 37.0 (E) 30.0	9.4	95.1	13	3.06, 1.83, 1.21, 0.90, 0.73	(F) 240 Disc (R) 203 Drum	2080	
Nissan Sentra / B11 1.5 (82-83)	4 Cyl SOHC	76.0 x 82.0 1488	(I) 37.0 (E) 30.0	9.3	94.5	13	3.33, 1.95, 1.29, 0.90, 0.73	(F) 239 Disc (R) 180 Drum	1980 (SD) 2100 (HB)	
Nissan Sentra / B12 1.6 (83-86)	4 Cyl SOHC	76.0 x 88.0 1597	(I) 37.0 (E) 30.0	9.4	94.5	13	3.33, 1.95, 1.29, 0.90, 0.73	(F) 239 Disc (R) 180 Drum	1980 (SD) 2100 (HB)	
Nissan Sentra / B12 (E16) (87-88)	4 Cyl SOHC	76.0 x 88.0 1597	(I) 37.0 (E) 30.0	9.4	95.7	13 / 14	3.33, 1.96, 1.29, 0.90, 0.76	(F) 238 Disc (R) 203 Drum	2180	
Plymouth Arrow 1.6 (76-80)	4 Cyl SOHC	76.9 x 86.0 1597	(I) 38.0 (E) 31.0	8.5	90.6	13	3.21, 2.00, 1.31, 1.00, 0.85 or 3.53, 2.19, 1.44, 1.00	(F) 227 Disc (R) 229 Drum	2190	
Plymouth Champ 1.6 (79-83)	4 Cyl SOHC	76.9 x 86.0 1597	(I) 38.0 (E) 31.0	8.5	90.6	13	4.23, 2.37, 1.47, 1.11 or 3.27, 1.83, 1.14, 0.86	(F) 227 Disc (R) 155 Drum	2040	
Plymouth Colt 1.5 (1989)	4 Cyl SOHC	75.5 x 82.0 1468	(I) 35.0 (E) 30.0	9.4	93.9	13	3.36, 1.95, 1.29, 0.94, 0.78	(F) 232 Disc (R) 181 Drum	2270	
Plymouth Horizon 1.7 (78-79)	4 Cyl SOHC	79.5 x 86.4 1716	(I) 34.0 (E) 31.2	8.2	99.2	13	3.45, 1.94, 1.29, 0.97	(F) 229 Disc (R) 201 Drum	2050	

ITC	Engine Type	Bore x Stroke(mm)/ Displ. (cc)	Valves IN & EX (mm)	Comp. Ratio	Wheel-base (inch)	Wheel Dia. (inch)	Gear Ratios	Brakes Std. (mm)	Weight (lbs)	Notes:
Plymouth Horizon TC3 1.7 (79-80)	4 Cyl SOHC	79.5 x 86.4 1716	(I) 34.0 (E) 31.2	8.2	96.7	13	3.45, 1.94, 1.29, 0.97	(F) 229 Disc (R) 201 Drum	2110	
Porsche 914-4 1.7 (70-73)	4 Cyl OHV	90.0 x 66.0 1679	(I) 39.4 (E) 33.0	8.2	96.4	15	3.09, 1.89, 1.26, 0.93, 0.71	(F) 280 Disc (R) 282 Disc	2080	"Petty Bar" style cage is permitted. Rear cage braces may pass through rear window.
Renault Alliance 1.4 (83-87)	4 Cyl OHV	76.0 x 77.0 1397	(I) 34.2 (E) 30.3	8.8	97.8	13 / 14	3.72, 2.06, 1.27, 0.90, 0.73		2070	Bendix T.B. injection
Renault Alliance 1.7 (84-87)	4 Cyl SOHC	81.0 x 83.5 1721		9.5	97.8	13 / 14	3.72, 2.06, 1.32, 0.97, 0.79		2100	Bendix T.B. injection
Renault Encore 1.4 (83-87)	4 Cyl OHV	76.0 x 77.0 1397	(I) 34.2 (E) 30.3	8.8	97.8	13 / 14	3.72, 2.06, 1.27, 0.90, 0.73		2070	Bendix T.B. injection
Renault Encore 1.7 (84-86)	4 Cyl SOHC	81.0 x 83.5 1721		9.5	97.8	13 / 14	3.72, 2.06, 1.32, 0.97, 0.79		2100	Bendix T.B. injection
Renault LeCar/R-5 1.3 (76-78)	4 Cyl OHV	73.0 x 77.0 1289	(I) 33.5 (E) 29.0	9.5	95.8 L 94.6 R	13	3.89, 2.38, 1.52, 1.03	(F) 229 Disc (R) 180 Drum	1910	
Renault LeCar/R-5 1.4 (79-84)	4 Cyl OHV	76.0 x 77.0 1397	(I) 34.2 (E) 30.3	8.8	95.8 L 94.6 R	13	3.84, 2.38, 1.52, 1.03	(F) 229 Disc (R) 180 Drum	1910	
Toyota Corolla / SR5 (83-87)	4 Cyl OHC	81.0 x 77.0 1587		9.0	94.5	13	3.586, 2.021, 1.383, 1.000, 0.860	(F) 231.5 Disc (R) 229 x 40 Drum	2270	
Toyota Corolla / SR5 (2TC) (71-74)	4 Cyl OHV	85.0 x 70.0 1588	(I) 41.0 (E) 36.0	8.5 fed 9.0 cal	91.9	13	3.59, 2.02, 1.38, 1.00 or 3.59, 2.02, 1.38, 1.00, 0.86	(F) 229 Disc (R) 231 Drum	2130	Screwed-on fender flares standard equipment on SR5.

ITC	Engine Type	Bore x Stroke(mm)/ Displ. (cc)	Valves IN & EX (mm)	Comp. Ratio	Wheel-base (inch)	Wheel Dia. (inch)	Gear Ratios	Brakes Std. (mm)	Weight (lbs)	Notes:
Toyota Corolla / SR5 1.6 (75-79)	4 Cyl OHV	85.0 x 70.0 1588	(I) 40.0 (E) 34.0	8.5	91.9	13	3.59, 2.02, 1.38, 1.00, 0.86	(F) 229 Disc (R) 231 Drum	2230	Screwed-on fender flares standard equipment on SR5.
Toyota Starlet (81-83)	*4 Cyl OHV*	*75.0 x 73.0 1290*	*(I) 36.0 (E) 29.0*	*9.0*	*90.6*	*13*	*3.79, 2.12, 1.32, 1.00, 0.86*	*(F) 226 Disc (R) 200 Drum*	*1850*	
Toyota Tercel (91-94)	*4 cyl. DOHC*	*72.9 x 89.9 1456*	*(I) 31.0 and 24.0 (E) 31.0*	*9.3*	*93.7*	*13*	*3.545, 1.904, 1.233,0.885*	*((F) 238.0x17 vented (R) 207.0 drum*	*1930*	
Triumph Spitfire (73-80)	4 Cyl OHV	73.7 x 87.5 1493	(I) 36.6 (E) 29.7	8.0	83.0	13	3.75, 2.16, 1.39, 1.00	(F) 229 Disc (R) 178 Drum	1840	
Triumph Spitfire Mk III (68-70)	4 Cyl OHV	73.7 x 75.9 1296	(I) 33.0 (E) 29.7	9.0	83.0	13	3.75, 2.16, 1.39, 1.00	(F) 229 Disc (R) 178 Drum	1750	
Volkswagen Beetle (68-77)	4 Cyl OHV	85.5 x 69.0 1584	(I) 35.5 (E) 32.0	7.3	94.5	15	3.78, 2.06, 1.26, 0.93	(F & R) 230 x 40 Drum	2000	
Volkswagen Super Beetle (71-77)	4 Cyl OHV	85.5 x 69.0 1584	(I) 35.5 (E) 32.0	7.5	94.5	15	3.78, 2.06, 1.20, 0.93 or 3.80, 2.06, 1.26, 0.89	(F) 244 Drum (R) 231 Drum	2000	
Volkswagen Beetle (98-99)	4 Cyl SOHC	82.5 x 92.8 1984	(I) 39.5 (E) 32.9	10.0	98.9	16	3.78, 2.12, 1.36, 1.03, 0.84	(F) 280 Vented Disc (R) 232 Solid Disc	2760	
Volkswagen Jetta 1.7 (82-84)	4 Cyl SOHC	79.5 x 86.4 1715	(I) 34.0 (E) 31.0	8.2	94.5	13	3.45, 1.94, 1.29, 0.91, 0.71	(F) 239 Disc (R) 180 Drum	2080	
Volkswagen Rabbit (75-80)	4 Cyl SOHC	79.5 x 73.4 1457 76.5 x 80.0 1471 79.5 x 80.0 1588	(I) 34.0 (E) 31.0	8.2	94.5	13	3.45, 1.94, 1.37, 0.97 or 3.45, 1.94, 1.29, 0.97 or 3.45, 1.94, 1.29, 0.97, 0.76	(F) 239 Disc (R) 200 Drum (R) 180 Drum	2000	78-79: Bosch CIS injection, 80: carbureted, 76: carbureted, 77, 80: Bosch CIS injection

ITC	Engine Type	Bore x Stroke(mm)/ Displ. (cc)	Valves IN & EX (mm)	Comp. Ratio	Wheel-base (inch)	Wheel Dia. (inch)	Gear Ratios	Brakes Std. (mm)	Weight (lbs)	Notes:
Volkswagen Rabbit 1.7 (81-84)	4 Cyl SOHC	79.5 x 86.4 1715	(I) 34.0 (E) 31.0	8.2	94.5	13	3.45, 1.94, 1.29, 0.91, 0.71	(F) 239 Disc (R) 180 Drum	2050	Bosch CIS injection
Volkswagen Scirocco (75-80)	4 Cyl SOHC	79.5 x 73.4 1457 76.5 x 80.0 1471 79.5 x 80.0 1588	(I) 34.0 (E) 31.0	79: 8.0 8.2	94.5	13	3.45, 1.94, 1.37, 0.97 or 3.45, 1.94, 1.29, 0.97 or 3.45, 1.94, 1.29, 0.97, 0.76	(F) 239 Disc (R) 180 Drum	2040	
Volkswagen Scirocco I 1.7 (1981)	4 Cyl SOHC	79.5 x 86.4 1715	(I) 34.0 (E) 31.0	8.2	94.5	13	3.45, 1.94, 1.29, 0.91, 0.71	(F) 239 Disc (R) 180 Drum	2110	Bosch CIS injection
Volkswagen Scirocco II 1.7 (82-84)	4 Cyl SOHC	79.5 x 86.4 1715	(I) 34.0 (E) 31.0	8.2	94.5	13	3.45, 1.94, 1.29, 0.91, 0.71	(F) 239 Disc (R) 180 Drum	2110	Bosch CIS injection
Yugo GV (1986)	4 Cyl SOHC	80.0 x 55.5 1116	(I) 36.15 (E) 31.15	9.2	84.6	13	3.91, 2.06, 1.35, 0.96	(F) Disc (R) Drum	1850	

WHEN YOU HAVE ALL THE RIGHT PARTS, WHO NEEDS LUCK?

Take your BMW racecar to the next level with BMW Motorsport parts. Only authentic BMW Motorsport parts can offer true BMW performance on the track. For the first time ever in the United States, you can purchase BMW Motorsport parts, available at select BMW centers.

For more information visit
bmwusa.com/bmwmotorsportparts.

BMW Motorsport/racing/off-road parts are for racing/off-road purposes only and not DOT approved. These parts are NOT approved for street use, may make the vehicle non-street legal, and may invalidate the original manufacturer's warranty on the vehicle. Purchase of the BMW Motorsport/racing/off-road parts will require that a disclaimer, waiver and release be completed and signed.

©2010 BMW of North America, LLC. The BMW name, model names and logo are registered trademarks.

9.1.4. SUPER TOURING CATEGORY

These specifications are a part of the SCCA GCR and all automobiles shall *conform to* GCR section 9.

A. Purpose

Vehicles used in *this category* must be identifiable with the vehicles offered for sale to the public and available through the manufacturer's distribution channels in the US. *The intent of this category is to allow a level of preparation for cars similar to that of World Challenge cars.* No model years older than 1985 will be *eligible*, except that cars from model runs began before 1985 are *eligible* (e.g., if a model was produced in 1983-1988, the 1983 and 1984 cars are *eligible*). The SCCA does not guarantee the competitiveness of any car.

Vehicle modifications *are* limited to those listed herein. Unless a particular modification or part is approved in these rules, the vehicle and all of its relevant parts and assemblies shall be stock for the correct make and model of car.

B. Eligibility

Vehicles meeting one of the following criteria may compete in the Super Touring category:

- *1985 and newer cars* built specifically under these ST rules
- GCR listed IT cars*, 1985 and newer,* under the*ir* current IT specifications shall compete *in STU*.

  Note: While IT cars may not be competitive in the ST category, *their inclusion in* the category will allow regional competitors to *participate in* national event*s*.
- *Spec Miata cars completely conforming to Spec Miata class specifications are eligible for STL.*
- Cars eligible for the SCCA Pro Racing MX-5 Cup series using the current Pro Racing Rules *may run in STU*, except that any DOT tire is permitted, the claim rule will not be in effect, and a head and neck restraint is optional *until 2012*.

  Competitors must have a copy of the current rules in their possession.
- *Cars eligible for the SCCA Pro Racing VW TDI Cup series using the current Pro Racing Rules may run in STU, except that any DOT tire is permitted and a head and neck restraint is optional until 2012.*

  Competitors must have a copy of the current rules in their possession.

C. Bodywork

1. Standard body appearance must be strictly maintained. Standard body appearance include*s* the OEM grille and badge. A photographic replica is not sufficient. *A* close-out panel *may be mounted* behind the grille. OEM *or aftermarket* spoilers and wings

STCS

are permitted. OEM side skirts may be used if they were available on the car from the dealer provided they meet the minimum ride height rule. Aftermarket side skirts may be used provided they meet the minimum ride height *rule*, have no openings/ducts in them other than for jacking insert(s), are no wider than the approved fascias, do not extend any higher than the bottom of the door and do not reinforce the chassis.

2. Body and frame seams and joints may be welded, but additional reinforcing material/brackets are not permitted. The OEM radiator supports may be replaced or reinforced to make repairs easier. The radiator supports shall not reinforce the rest of the chassis or diminish the OEM crush zones.

3. Bumper brackets may be modified, but bumpers must remain in OEM locations.

4. Non-essential body items and trim may be removed including attaching brackets and supporting structure. Any holes in bodywork exposed by the removal of these items shall be covered or filled.

5. All of *the* vehicle's doors must be able to be opened from both inside and outside the vehicle. Latches and hinges for the doors may be modified, but must remain in working order. Aftermarket latches and hinges may be used but shall not protrude beyond outer surface of bodywork.

6. *Hood and trunk pins, clips, or positive action external latches are permitted. Stock hood and trunk latches may be disabled or removed; if so, a positive action external fastening method shall be used. Engine compartment insulation may be removed.*

7. Openings in the bodywork may be temporarily covered, wholly or partially, with tape for *the* purpose of regulating airflow. Bodywork openings may be closed off using close-out panels mounted behind body opening*s*. Bodywork seams may not be taped *except* to temporarily secure it after contact.

8. All bodywork and windows shall be sufficiently rigid, adequately supported and properly secured such that it does not noticeably flutter, move, or deform while vehicle is in motion.

9. Aftermarket OEM style hardtops are allowed. Aftermarket carbon fiber hardtops are not allowed.

D*. Aerodynamic *Devices

1. Front Splitter

a. A front splitter that is a flat, single-plane may be added. The splitter shall have no vertical deviations. The permitted splitter may close out the underbody from the leading edge of the approved bodywork, back to the centerline of the front axle. The splitter may be mounted to the front fascia via a vertical intermediate mounting surface. If the vertical mounting surface overlaps the front fascia, it may not overlap more than 2.0 inches. Additionally, a maximum of 4 rods, or cables, may be used to support the front, and/or sides, of the splitter. No other material(s) may be used external to the body to support the splitter. A single-plane vertical close-out panel(s) may be used to bridge the gap between the

front fascia and the splitter. Splitter designs may incorporate openings for brake ducts provided it does not affect the standard body appearance.

STO and STU:
The front splitter must not extend more than 2.0 inches past the original or approved bodywork as viewed from above for the entire profile of the splitter. *The s*plitter shall not extend laterally any further than the widest point of the outside sidewall of the front tires with the wheels pointed straight ahead. Additionally, the splitter may not extend more than 2.0 inches beyond the bodywork, regardless of where the outside edges of the front tires are. The splitter *may have* vertical deviations, fences, etc., *only if* they are part of the production bodywork for street use.

STL:
The front splitter/spoiler must not extend past the approved bodywork as viewed from above for the entire profile of the front fascia.

b. When the splitter *is* measured, there will be a *0.25 inch tolerance* permitted to account for flexure of the fascias, off-course excursions and any light body contact. There will be no variance greater than *0.25 inch* permitted unless the car has severe body damage that would affect the measuring of the splitter.

c. The minimum ride height of front splitters and air dams is 3.0 inches

2. *Rear Wing*
The wing shall be mounted to the trunk/deck lid with 2 mounting brackets. Each mounting bracket shall attach to the wing at a point that is at least 2.0 inches inboard of endplates. The wing, and the portion of the mounting brackets located externally to the trunk/deck lid, may only be reinforced by a diagonal strut having no aerodynamic effect, and/or by affixing the external parts of the brackets to internal parts of the brackets within the trunk/cargo area. The internal parts of the brackets may protrude through the trunk/deck lid to allow the two parts of each bracket to be fastened together.

OEM wings and spoilers are permitted as delivered, but must be removed if an approved wing is installed.

STO:
The *entire* rear wing *assembly*, including *the end plates and* any wicker , shall be mounted level with, or below, the peak of the roof. The trailing edge of the rear wing may be mounted no further rearward than the *center of the rearmost part* of the approved bodywork. The rear wing is limited to a single element with a chord length of 12.*0* inches*, including any wicker*. *The entire wing assembly may be* no wider than the widest part of the car, not including fender flares/lips and mirrors, or a maximum width of 72.*0* inches, whichever is the lesser. *Wing end plates must not exceed 144.0 square inches.*

STU and STL:
The entire rear wing assembly, including the end plates and any

STCS

wicker, shall be mounted a minimum of 6.0 inches below the peak of the roof. Cars with a wagon-style or hatchback body (e.g., Mazda Protege 5, Civic hatchback) may have the rear wing mounted a maximum of 4.0 inches above the roofline. The mounting position will be measured between the highest points of the roof and the wing assembly. The trailing edge of the rear wing may be mounted no further rearward than the center of the rearmost part approved bodywork. Wings shall be a single element with a maximum chord length of 8.50 inches, including any wicker, and a maximum wing assembly width of 48.25 inches. Wing end plates must not exceed 64.0 square inches. APR performance wing GTC-200 part #AS-104801, variable cord length (8.75" Inner/6.75" Outer), is permitted.

3. *Canards or dive planes are not permitted unless part of the OEM bodywork.*

E. Interior

1. The following items must be removed : tool kit, spare tire, supplemental restraint systems (SRS) and passive restraint systems.

2. The following items may also be removed:
Headliner, sun visor, carpeting, carpet pad and/or insulation, soundproofing, OEM seats, all trim except the dashboard, heating and air conditioning systems, window winding mechanisms, central locking systems, audio system, and any other systems fitted to the original car solely for the comfort of the driver and/or passengers.

3. The following items may be installed:
Safety equipment/structures, seat, controls necessary for driving, instrumentation, electronic equipment, radio, camera, battery, driver cooling system, driver ventilation system, replacement door panels/interior trim, anti-sway bar controls (not within reach of driver). None of the above items may hinder *driver* exit *from the car*.

4. The above components shall be attached *to*/contained *in* the chassis in such a way as to be able to withstand 25g deceleration. Any sharp edges shall be covered, padded, protected, etc. to prevent injury to driver, crew, course workers, and officials.

5. The chassis shall not be modified to make additional clearance for the driver's seat. The driver's seat shall be located in the same lateral location as the OEM seat, *unless otherwise allowed on a car's spec line*. The driver's seat shall be located longitudinally so that the seat back, at the driver's shoulders, does not break an imaginary vertical plane located at the front of the rear seat platform. On 2-seat vehicles the seat back may go back to the OEM rear bulkhead, package tray, etc. It is recommended that the floor be reinforced in the areas where the seat is mounted to the chassis. Vehicles with a non-metallic floor shall add tubing elements, with a minimum wall thickness of .090 inch, connecting metallic parts of the chassis, or within the cage structure, to *which* the seat *must be mounted*.

6. Stock dash/instrument panel cover (dash pad) must be used. Original instruments/gauges may be replaced, or supplemented,

with additional engine monitoring gauges. Accessories, lights and switches may be added or removed. Box-type extensions from the dash pad may be used to mount switches and controls, in the areas where the OEM insert panels were mounted, so that they more easily accessible to the driver. Audio and video systems may be removed.

7. Vertical bulkheads, and enclosures, within the cockpit shall not be any higher than the bottom of the side windows, and shall not extend more than 18.0 inches above the floor pan. No bulkheads shall cover the rear foot wells.

   a. Sedan Body (4-door) and Hatchback Body (3-door) - Any bulkheads positioned in front of the plane determined by the OEM rear seat back shall not extend laterally from one side of the chassis to the other, but rather shall only be large enough to cover the individual components necessary.

   b. Coupe Body (2-door) - Any bulkheads positioned in front of the plane determined by the OEM rear seat back, if applicable, may extend laterally from one side of the chassis to the other.

8. Dash pad modification – It is permitted to modify the dash pad in order to run the roll cage tubes through the dash area as long as the dash pad is modified only enough for roll cage fitment. If necessary, the dash pad may be parted to ease installation around roll cage. Any such parting shall be done in such a way as to minimize the appearance that they have been separated once pieces of dash pad are installed.

F. **Chassis**

1. All cars shall have the OEM rear package shelf and/or rear seat back support structure installed if applicable. As an alternative, a metallic close out panel may be installed that simulate*s* the *rear* package shelf and/or the rear seat back support structure if applicable. If a close out panel is used to clean up the appearance of the rear package shelf and/or rear seat bulkhead in conjunction with the OEM structure, the close out panel material is free.

2. Cables, wiring and *fluid* lines *in the engine compartment and cabin interior* may be replaced, rerouted, and/or protected.

3. *Cars that have drive shafts shall have* 2 steel, 360-degree loops of sufficient strength located as close as possible to the front and rear universal joints to prevent the driveshaft from dropping in case of failure of either universal joint. Floor materials, torque tubes and cross members may also be utilized to provide this protection.

4. It is permitted to attach *one or more* plate*s*, or pad*s*, under the car to provide for jacking of the car, provided *they* serve no other purpose. It is prohibited to install any kind of device, which protrudes from the rocker panel or side of the car. However, tubes may be attached to the roll cage or chassis and extend to the inner surface of the rocker panel or bodywork *to* act as a receptacle for a jacking fixture. Air jacks are permitted, but no air source may be carried on board.

5. Minimum ride height is *3.0 inches for STO, 4.0 inches for STU*

and 5.0 inches for STL. Ride height will be measured at the lowest point of the rocker panel, not including the pinch weld.

6. The OEM firewall between the cockpit and engine compartment shall be intact to prevent the passage of flames from the engine compartment to the cockpit. Any holes in the firewall must be of the minimum size for the passage of controls and wires, and must be completely sealed.

7. Both front windows, driver and passenger, shall be down (preferably removed) whenever the vehicle is on track. The OEM window opening on the front doors shall not be filled in with any material, other than the material required to mount a NACA-duct for driver cooling. If used, the NACA-duct shall be mounted in the front, lower, corner of the window opening. The area closed off to mount the NACA-duct shall not exceed 50 square-inches. In rain conditions, a quarter window larger than 50 square-inches may be used in the area normally used to mount the permitted NACA-duct, in an attempt to minimize the amount of water entering the cockpit. Enough open area for the driver to exit in an emergency shall remain open at all times.

8. All vehicles must use a stock, OEM equivalent, safety glass windshield, or *0.25 inch* minimum thickness Lexan replacement, mounted in the stock location, at the stock angle and maintaining the stock profile.

9. Windshield clips, per GCR section 9.3 Windshield Clips/Rear Window Straps, are permitted and recommended.

10. Side windows, not including the front door windows, and rear windows may be replaced by clear Lexan-type plastic material having a minimum thickness of *0.125 inch*, but must retain the same shape, size, and location as the original glass. NACA-ducts may be mounted in the side windows. The rear window must be secured by 2 additional straps *1.0 inch wide by 0.0625 inch thick minimum*, bolted or riveted to the body at both the top and bottom of the rear window. If a Lexan rear window is mounted with multiple, evenly spaced screws around each side of its perimeter, safety straps are not required. If a DOT spec glass rear window is used in conjunction with the OEM method of mounting, safety straps are recommended, but not required.

11. Windows may be mounted and sealed with silicone. Any silicone used to bridge the gap between the perimeter of the window and the chassis shall be neat in appearance and uniform in thickness. Tape may only be used to seal the windows during wet track sessions for the purpose of reducing the amount of water entering the cockpit.

12. OEM side window framework shall be intact.

13. Acrylic or glass removable/moveable roof panels may be replaced with the same material as the surrounding roof. All brackets, mounts, and moldings must be removed. Fabric tops are not permitted and shall be removed along with all associated hardware. It may be replaced with an OEM hardtop if one is available.

14. Unused mounting tabs and brackets that are non-structural,

excluding the rear seat back support and package tray, may be removed.

15. The OEM "rain gutter/tray" at *the* base of the windshield shall be intact and in the OEM location.

16. The floor pan may be modified to provide clearance for the exhaust system.

17. Inner fender panels may be modified or replaced.

18. Convertible model cars may compete with a hardtop or as an open car.

***G*. Engine**

1. Alternate engines may be used, *if* the manufacturer of the vehicle and engine are the same (e.g., an Acura engine installed into a Honda car) *and was available in a car delivered in North America*. *The chosen engine must retain its original cylinder head and intake manifold. If an engine from a front wheel drive vehicle is installed in a rear wheel drive vehicle, alternate OEM intake manifolds may be considered.*

2. The crankshaft shall be a stock OEM part or *an* aftermarket part as long as it is of identical dimensions and material as the OEM part for the specific engine. The crankshaft may be *balanced*. The *maximum* weight reduction allowance for balancing of the crankshaft is 0.5 lbs. The *maximum* weight reduction allowance for the balancing of the reciprocating assembly is 15 grams. Alternate connecting rods are permitted*, but must be ferrous unless OEM supplied*.

3. Blocks may be sleeved to repair cylinder walls. Engines may be bored to a maximum of .040 inch over standard bore size.

4. Rocker arm, lifter, follower, pushrod, valve spring, keeper, retainer, guide, seat, and valve *materials* are free; Titanium is not permitted, except for retainers *or OEM parts*. The head may be machined to fit valve train components.

5. Valve lift is limited to .600 *inch for STO and STU. STL Valve lift is limited to .425 inch for 4 valve/cylinder engines, .425 inch intake and .450 inch exhaust for 3 valve/cylinder engines, and .450 inch for 2 valve/cylinder engines*. Camshafts and *camshaft* timing *are* free.

6. Cars produced with an electronic throttle body may use the OEM electronic throttle body. The OEM electronic throttle body may be converted to manual actuation and the actuation cam on a manual throttle body may be changed to alter the opening/closing rate of the butterfly

7. The ignition system components may be replaced freely provided that the type of ignition remains the same as stock.

8. Engine calibration (spark and fuel) is free. A programmable ECU is permitted.

9. Fuel injectors and fuel rails must maintain the original number and mounting locations, but are otherwise free. Fuel pumps and fuel

STCS

filters are free in type, size and number.

10. The location and type of the fuel pressure regulators are free provided they are mounted within the engine compartment or the OEM location.

11. The ring gear diameter must be the same as the production flywheel. Flywheels shall be ferrous or aluminum, but are otherwise free. *For STO and STU, c*lutch and pressure plate design is free*, but see individual class specifications for material restrictions. For STL, stock diameter flywheel, clutch and pressure plate must be used.*

12. *The o*il pan and oil pickup may be baffled, modified, or replaced. *The* OEM oil pump may be modified, or replaced with an OEM-style oil pump. Cars using a wet-sump oil system shall safety wire *or in some other way secure* the oil drain plug.

13. Vents, breathers, and oil filters may be added, or substituted. All emission control devices may be removed and the resulting holes plugged.

14. Replacement gaskets and seals are free, including head gaskets. Replacement gaskets and seals must be made out of material(s) designed to seal the parts of an engine. Replacement gaskets and seals may not perform any other functions. Head gaskets may be used to adjust compression ratio.

15. The intake and exhaust ports may be ported *in STO and STU* unless otherwise noted *at a 1 percent weight penalty*. The valve guide may be machined as part of this porting. The intake manifold may be port matched to the head(s), provided no material is removed further than one inch in from the manifold to head mounting surface(s). *STL must conform to the STL specific cylinder head rules.*

16. Variable cam timing (VTEC, VANOS, etc.) and variable length intake manifolds may be partially, or wholly, disabled. Variable cam timing systems that use multiple cam lobes for each valve(s) may remove lobes from the camshaft(s) that are not being used.

17. *T*o increase the compression ratio, the bottom of the head may be machined. Alternate pistons are permitted and/or the pistons may be machined. Compression is limited to 12.0:1 *for STO and STU and 11.0:1 for STL. If an STL eligible car has an OEM compression ratio higher than 11.0:1 the vehicle may retain the OEM compression ratio.*

18. Cars utilizing forced induction may not have a boost controller within reach of the driver. A car must enter pit lane to have the boost level changed by the crew if necessary. *Competitors* must be prepared to demonstrate the boost adjustment process to officials. Unless otherwise noted, the follow restrictions apply to turbochargers. Turbocharging is permitted only with a factory turbo/engine combination. The inlet restrictor (if required) shall be positioned in the compressor inlet housing. Turbochargers may not be added to engines that did not originally come equipped with one. Swapping of turbochargers between engine makes and models is prohibited. Supercharged cars may be approved on a case-by-case basis. Contact the Club Racing Technical Office for

details.

19. *Engine parts, including, but not limited to, heads, intake manifolds and carburetors, may be cleaned using usual methods (e.g., bead blasting, soda blasting, Scotch Brite pads) as long as part dimensions are not altered.*

H. Cooling Systems

1. Water Cooling
   Provided that the stock method of cooling is retained, the cooling system is free, including cooling fans, but the water radiator must remain in the approximate OEM location. The mounting angle may be changed.

2. Engine Oil Cooling
   Coolers for the engine oil are free in number, type and location.

3. Intake Air Cooling
   Cars utilizing forced induction may install intercoolers. The number, type, and location of intercoolers are free.

4. Water Spray Systems
   Water may not be sprayed on any intercoolers, radiators, etc. Water spray systems may only be used to inject water into the brake ducts.

I. Fluid Piping & Fuel Tank

1. Fuel Cells/Tanks
   The use of a fuel cell is required unless the stock fuel tank is located between the axle centerlines and within the main chassis structure (i.e., frame rails, etc.). All fuel cells *must* comply with GCR 9.3. Proper bracing to protect the fuel cell in the event of a rear-end crash is required. If a fuel cell is installed in the rear hatch/rear trunk area, the OEM floor pan in that area may be replaced with metal in order to make it easier to mount the fuel cell and close out the area around the fuel cell.

2. There must be a metal bulkhead completely separating the cockpit from the compartment containing the fuel cell. This does not negate the requirement that the fuel cell bladder be contained in a metal container.

3. No line containing engine coolant may pass through the cockpit. No hydraulic fluid lines may have removable connectors inside the cockpit.

4. All fluid hoses, lines, reservoirs, and tanks that are in the cockpit, or cargo area that is open to the driver, shall be separated from the driver by rigid metallic and/or non-metallic enclosures and/or deflection shields to prevent fluid from spraying on the driver in case of a leak. Magnesium is prohibited. Waterproof flexible wraps may also be used to prevent fluid from spraying on the driver. The floor of these enclosures, or the area under the deflection shields, shall be designed to prevent the accumulation of fluids.

5. *No fuel cooling devices are permitted in the car.*

J. Oil System

1. If oil storage tanks are not located in the original position they must be surrounded by a 10 mm thick crushable structure. Provided that the oil tank is not located in close proximity to the outer surface of the bodywork, and there is some of the structure of the vehicle between the oil tank and the bodywork, the car's structure will meet the 10mm crushable structure rule.

2. If the oil tank is located in the cockpit area, or a trunk area that is open to the driver, it must be separated from the driver by a metal enclosure made up of .036 *inch* steel, or .059 *inch* aluminum. This is in addition to the 10mm thick crushable structure that is required in section 9.1.4.I.2. The floor of the enclosure must be designed to prevent accumulation of fluids.

3. Accusump-type systems may be used.

4. Dry-sump systems:
STO:
The dry-sump system is limited 5 stages. It shall consist of 1 pressure stage and a maximum of 4 scavenge stages. If the OEM-style pressure pump is used it shall count as the one permitted pressure stage. There may be a maximum of 2 two-port scavenge stages, or a maximum of 4 single-port scavenge stages, or any combination such that oil is not being scavenged from more than a maximum of *4* locations.

STU:
The dry-sump system is limited to 3 stages. It shall consist of 1 pressure stage and a maximum of 2 scavenge stages. If the OEM-style pressure pump is used it shall count as the one permitted pressure stage. There may be a maximum of 1 two-port scavenge stage, or a maximum of 2 single-port scavenge stages, such that oil is not being scavenged from more than a maximum of *2* locations.

STL:
Dry sump systems are not permitted.

***K*. Exhaust System**

The exhaust system may be modified, or replaced. Outlets must be located rearward of the midpoint of the wheelbase. The exhaust pipe may not protrude more than *3.0 inches* at the point where it exits the bodywork. If the exhaust pipe(s) exit the bodywork at the widest part of the body such that any extension of the exhaust pipe(s) beyond the body would make pipe(s) the widest point, the exhaust pipe(s) must be trimmed flush (+/- 0.5 *inch*) with the bodywork at the point that they exit the body. Minor body modifications are permitted to *accommodate* exhaust systems. Modifications shall serve no other purpose. The underbody rocker panels may be modified for the installation of the exhaust system, but these modifications may only serve to provide clearance for the exhaust system. The exhaust system must be adequately isolated from the driver's compartment. If the exhaust system is routed in such a way that damage to it could cause hot exhaust to contact any part of the fuel system, there shall be a metallic heat shield protecting the fuel system components. This heat shield shall be located at least *3.0 inches* away from the exhaust system, and there shall be at least *3.0 inches* between the heat shield and the fuel system components.

***L*. Electrical System**

The electrical system is free provided that:

1. The battery may be replaced with any equivalent battery of the same type. Battery may be relocated, but must be secured by a tie-down bracket and positive terminal must be covered to prevent accidental sparking.

2. If located in the cockpit, the battery must be placed behind the front seats, or in the passenger seat area, and the protection box must include an air vent that exits outside the cockpit.

3. All cars, except cars with pop-up headlights, shall have clear OEM headlight assemblies in place in the stock headlight positions. If headlight assemblies are used, they may be the clear OEM assemblies for any country *in which* the car is sold. Additionally, the headlight assembly may consist of a replica bucket and the OEM lens. There shall be an operational light bulb within both the low and high beam placements. The operational light bulbs need not be of OEM origin, but must produce approximately the same light output as an OEM Halogen low beam.

4. Fog/driving lights, parking lights and associated attaching hardware may be removed. The resulting openings may be used to duct air, or *may* be filled/covered. *No* ducting may extend beyond the outer surface of the bodywork.

5. Each car must be fitted with at least one effective windshield wiper *assembly*, which must be in working order throughout the event. Wiper blades, arms and associated hardware may be substituted freely. *Other windshield wiper assemblies may be* removed.

6. Each car must have an effective defogging/demisting system that is capable of keeping the windshield clear during wet sessions. Anti-fog films meet this requirement.

***M*. Drivetrain**

1. Alternate differential housings are permitted from the same model of vehicle. Differential may be open, locked, or of a limited-slip type. The internals of limited-slip type differentials may be modified to change the amount of slip limiting. Differentials with external, or electric, adjustability are prohibited. Driveshaft and half-shafts may be aftermarket, but shall be the OEM-type and use the same types of materials as stock. Drive shafts may be replaced by one piece drive shafts, and conversely.

2. Vent and/or breather lines may be added to *the* transmission and/or differential. 1 transmission cooler *and* 1 differential cooler *are* permitted.

3. Cars with *aftermarket* sequential shift transmissions shall increase the required minimum weight by 100 lbs.

***N*. Suspension and Steering**

1. All suspension members must be made from *ferrous and/or aluminum* materials. Chromium plating of suspension members is *prohibited*.

2. *STO and STU o*riginal suspension pick-up points below the upper line of the wheel rim must be used within a tolerance of *1.0 inch*; however, if the lower suspension pickup point is changed

from the OEM location, 50 lbs. must be added to the car. *STL cars must retain the OEM lower suspension pickup points.* The body/frame around the pick-up points may be reinforced. This reinforcement shall be limited to a radius of *6.0 inches.* The *1.0 inch* tolerance applies to pick-up points on the chassis only.

3. *STO and STU s*uspension mounting points above the upper line of the wheel rim must be retained within a tolerance of *3.0 inches*, however, the body/frame around the pick-up points may be reinforced. This reinforcement shall be limited to a radius of *6.0 inches*. The *3.0 inch* tolerance applies to pick-up points on chassis only. *STL cars must retain the OEM upper suspension mounting points.*

4. Suspension springs are free. Coil-over units may be added to supplement or replace OEM springs. Attaching points may be reinforced. It is permitted to use threaded spring seats for adjustability.

5. Shock absorbers and struts are free. Driver adjustable systems *and* electronically controlled shocks are not permitted. If a reservoir/adjustment canister is used, only one may be used per shock. The shocks at each individual wheel may not be connected in any way.

6. Stabilizer bars are free, and may be added, removed, or substituted. Driver adjustable stabilizer bars are not permitted. Adjustment controls for stabilizer bars may be located within the cockpit, but must be out of the reach *from the driver's seat*. Adjustments to *stabilizer* bars during practice, qualifying and race must be done in pit lane.

7. Suspension components shall be the stock OEM *parts*, but they may be reinforced. Heim joints are permitted on suspension components. Standard suspension bushings may be replaced with solid or spherical bushings.

8. Alternate control arms permitted *in STO and STU. Alternate control arms are not permitted in STL.*

9. *STO and STU c*ars that come with a solid rear axle or trailing arm suspension are permitted an aftermarket or fabricated rear suspension. Cars with an altered rear suspension must add 50 lbs. Cars with live axle *rear wheel drive* may reduce the minimum weight by 50 *lbs in STO and STU. Rear wheel drive cars in STL must add 2.5 percent of their standard STL weight.*

10. Any anti-roll bar(s) and rear axle traction bar(s), rear axle panhard rod and watts linkage can be added or substituted, provided their installation serves no other purpose. The mounts for these devices can be welded or bolted to the car. These devices and their mounts cannot be located in the trunk or driver/passenger compartment unless fitted as stock. Rear axle traction bar(s) used to control axle housing rotation must be solid bar or tube.

11. When a car's anti-roll bar also acts as a suspension locating device, the bar's attachment points and pivot points on the chassis and suspension control arms must remain in th*eir* stock location*s*.

12. Slotted plates may be added over original shock mounts on front and rear shock towers for camber/caster adjustment. One bolt-in brace may connect the front strut towers, and one bolt-in brace may connect the rear strut towers.

13. *For STO and STU, t*he spindle and/or outer joint on the a-arm and/or strut may be moved to correct bump steer caused by changing the vehicle ride height. These components are not limited to the *1.0 inch* of movement that applies to the suspension pick-up points located on the chassis. *STL cars may not relocate the spindle and/or outer joint on the a-arm.*

14. All steering components, with the exception of the steering wheel, column and tie-rods/toe-links, must be original equipment supplied by the manufacturer. These parts may be strengthened provided the original part can still be identified.

15. The steering wheel may be replaced with an aftermarket, or racing steering wheel. Wood-rimmed steering wheels are not permitted. An all-metal quick release coupling on the steering wheel may be added.

16. A collapsible steering column shall be used. Most *recent* OEM steering columns have at least 2 universal joints in them that allow the steering column to *collapse* on impact. This type of design (*with* at least 1 universal joint) must also be used in any steering column extension(s) that may be used to reach the driver's competition seating position.

17. Power steering may be *modified in any of the following ways:*
    a. disconnected
    b. an OEM manual steering rack for that model may be fitted
    c. an electric power steering pump may be fitted
    d. an OEM electric-assisted steering rack may be used.

18. Front wheel drive cars may reduce their minimum weight by 50 Lbs *in STO and STU*. Front wheel drive cars with a strut type front suspension may reduce their minimum weight by an additional 50 lbs *in STO and STU. In STL front wheel drive cars with a strut type front suspension may reduce their minimum weight by 2.5 percent.*

***O*. Brakes**

1. Brake lines may be relocated, and rubber lines may be replaced with *stainless steel braided* brake lines. Original equipment master cylinders and pedals may be replaced. Hand brake assemblies may be removed. Aftermarket brake proportioning valves are permitted. Non-pressurized brake fluid lines and master cylinders need not be metal, metal shielded, or bulkheaded. Pressurized brake fluid lines must be metal, metal shielded, or bulkheaded.

2. Brake pad friction material is free.

3. Backing plates and dust shields may be modified, ventilated, or removed.

4. Brake duct inlets incorporated in the front spoiler as standard, or *in* light openings, other than headlights, may be used to duct air to the front brakes. Additionally, brake ducts may be fitted into *the* intermediate mounting surface of *a* permitted splitter.

5. Water spray cooling systems are permitted. The amount of water carried for injection into the brake duct is free. Water-cooled calipers are forbidden.

6. Wheel fans are not permitted.

7. Power assisted braking systems are permitted.

8. The balance of braking forces between the two wheels on an axle shall be equal and non-adjustable.

9. The balance of braking forces between the front and rear axles may only be adjusted by the driver through:
   a. Direct intervention on the position of the center of the joint, on the linkage lever of the hydraulic pumps of the front and rear circuits.

   b. Direct intervention on a *proportioning* valve in which the intake pressure is adjusted through a pre-loaded spring.

10. Brake calipers, whether OEM or aftermarket, shall be mounted in *the* stock location*s*.

11. Titanium piston inserts are permitted.

12. Anti-Lock Braking Systems (ABS) are permitted on cars that use the OEM brake components as supplied.

***P*. Tires & Wheels**

1. Tires must conform to 9.3.45. Filing, buffing, or any other disguising of tire sidewall is prohibited. Chemical treatments, or any means to artificially enhance tire performance is prohibited.

2. Wheels / Hubs

The standard wheels may be replaced with direct, bolt-on racing/ aftermarket wheels under the following provisions:
   a. Loose wheel spacers of any type are not recommended.
   b. All cars must run the same size wheel on the same axle.
   c. Lug nuts and/or wheel studs are free as long as at least two (2) threads of the wheel studs are visible and the outside edge of the nuts and studs are inside the wheel rim when properly mounted.
   d. As viewed from above at the centerline of the wheel; the fender shall completely cover the “tread” portion of the tire. Only the tire sidewalls may be visible.
   e. The wheel material is free, but they must be constructed of metallic material(s). No modifications (including grinding) are permitted on a vendor-supplied wheel.
   f. Valve stems and caps are free.

3. Wheel Attachment
   a. Center-locking type hubs and wheels may be used if vehicle is supplied with them from the manufacturer. If vehicle is not supplied with center-locking type wheels they may be used in conjunction with an adapter that bolts onto the OEM, or approved, hub.
   b. If a single wheel nut is used, a safety spring must be in place on the nut whenever the car is running and must be replaced after each wheel change. These springs must be painted Day-

Glo red or orange. Alternatively, another method of retaining the wheels may be used provided it has been approved by FIA.

9.1.4. STO SPECIFIC TECHNICAL REGULATIONS

A. *Bodywork*

OEM non-metallic composite body panels (i.e., plastic fascias, fiberglass hoods, etc.) may be replaced with panels of any type composite, provided that the panel maintains the OEM profiles. All cars may replace the hood, trunk/deck lid and doors with non-metallic composite parts. The hood may have heat exhaust vents installed in it. Hood inlets (scoops) are not allowed. The vents shall not expose the mechanical components of the car when looking down from above. The permitted transmission and differential coolers may vent through rear license plate frame. There shall be a screen, painted the same color as the surrounding bodywork, covering the vent opening. Any OEM non-functional, decorative vents/ducts may be made to be functional provided the exterior body appearance is not modified.

B*. *Interior

The required dash pad may be made of any material. The dash pad shall maintain the stock profile.

***C*. Chassis**

1. Fasteners are free. Fasteners may be replaced with adhesives.

2. Rounded coverings may be used at the rear of the front window openings to bridge gap between the leading edge of b-pillar and inner edge of main roll hoop. The material and design of these coverings is free, but shall be neat in appearance and securely fastened.

3. A third (3rd) tube on each side may extend through the firewall to the chassis in the engine compartment. These tubes shall not extend forward of the shock towers.

4. An underbody close-out panel(s) may be used in the area behind the rear axle. These panels shall not alter the external appearance of the car when looking from the rear and sides of the car (i.e. we want to have to lay on the ground to see them). If the production car uses underbody trim pieces, the OEM trim pieces may be removed or replaced, but any close-out panel(s) used may not visually hide any more of the mechanical components, when looking from the rear and sides of the car, than the OEM trim pieces do. The close-out panels shall not completely bridge the gap between the rear floor pan area and the rear axle centerline. On rear engine cars, any close-out panels shall not extend any further forward than the rear axle centerline. Cars with a fuel cell, engine, etc. that extend down into external visual range shall fit the close-out panel(s) around the component in such a way that it does not alter the external appearance of the car.

***D*. Engine**

1 Intake Requirements: All cars shall use the stock or approved air metering device (e.g., carburetor, throttle body) and intake manifold for the installed engine, unless noted otherwise.

2. All cars may fit the approved carburetor and manifold. The approved manifold may be ported and polished, but its design and configuration shall not be altered in any other way. The lowering of or boring of holes in the center divider is prohibited. Removal or

obliteration of the manifold part number is prohibited.

a. The approved carburetor shall be a maximum of 650 cfm and 4 barrels. The approved optional insulator (Holley #108-12), and manifold (Edlebrock Performer RPM #7101-General Motors / #7121-Ford/Mercury) shall be fitted to cars.

b. *Except* as *permitted* in these rules, the carburetor shall not be modified in any way. Any carburetor jets, accelerator pump, pump cam, and accelerator pump nozzles may be used. Power valves, metering blocks, and floats may be altered or replaced. No venturi (including secondary or auxiliary) shall be modified in any way, but they may be aligned. Idle holes may be drilled in the throttle plates (butterflies). Carburetors may be modified to allow "four corner" idle adjustment.

c. *The e*xternal throttle linkage to the carburetor may be modified or changed. Choke mechanisms, plates, rods, and actuating cables, wires, or hoses may be removed. No removal or alteration of the carburetor air horn is permitted.

d. All air entering the intake tract shall pass through the carburetor air inlet.

3. Cars may modify, or replace, motor and gearbox mounts provided that the engine is located in the specified location. This includes the use of "torque plates". All engines will be mounted in the stock position unless otherwise specified. Where an engine setback is allowed, the OEM firewall may be modified only enough to accommodate the engine set back.

Engine Setback *and Lowering* Allowances:

The following cars may set the engine rearward a maximum of 4.0 inches and may lower the engine a maximum of 1.5 inches:
Cadillac CTS-V (04-07)
Pontiac GTO (04-08)
Ford Mustang (85-06)
GM F-Body (93-02)

E, ***Drivetrain***

1. Carbon clutches are permitted.

2. Transmissions and *r*atios are free. Forward gears are limited to six speeds.

3. Traction Control/Launch Control is permitted, but must operate solely through the engine managements system (i.e., spark and fuel control) and may not interface with, or affect, the braking system or throttle control.

***F*.** **Brakes**

1. Rotors
1 or 2 piece ferrous rotors *that do* not exceed 355mm in diameter *or* 33mm in thick*ness are permitted*. Maximum brake rotor *diameter* of 380mm *is permitted* at *a* 100 pound penalty.

2. Calipers
The standard production calipers or any caliper with *6* or less pistons may be used. 4-piston calipers may use a maximum of

STCS

4 pads per caliper. 6-piston calipers are limited to 2 pads per caliper.

3. Brake duct water spray cooling systems are *permitted*.

***G*. Wheels**

*Rear w*heels may not exceed 18*.0 inches in diameter* and 13*.0 inches in width. Front wheels may not exceed 18.0 inches in diameter and 11.0 inches in width.*

H*. *Approved Cars and Engines

The following car and engine combinations are approved in STO. Contact the Club Racing Technical Office to add additional cars.

NOTES:

Note: Engine Displacements in this table are nominal. Each competitor shall have available definitive documentation (e.g., factory manual) of the original displacement for the engine used.

STO	Maximum Displacement	Minimum Weight	Restrictor	Notes
Acura CL	3500	2800		
Acura NSX	3000	2650		Super-charger permitted. Zero Force Body Kit by Kawagen Route permitted.
Acura NSX Turbo	*3500*	*2750*		
Acura NSX Turbo World Challenge	*3500*	*2850*		*Driving ambitions turbo kit- Part #DA-1000. Comp turbo #ct-4372 Turbo inlet restrictor of 44mm is required.*
Aston Martin DB9	6000	3300		
Aston Martin Vantage	*6000*	*3300*		
BMW E46 M3 & E36	3200	2600		The 3.4L (87.0 bore x 93.0 stroke) engine is permitted at 2650 lbs. The M5 5.0L is permitted at 3000 lbs. Flossman body kit is permitted.
BMW E46 M3	*3200*	*2850*		*Dinan supercharger kit part #D860-3101C / With R865-3120 pulley required.*
BMW 335ci/135i	2679	3000		Must use stock turbochargers.
BMW M3 E92 (08-09)	3999	2900		
Cadillac CTS-V	6000	*3240*		
Cadillac CTS-V (Stock OEM LS3)	*6200*	*3110*		*Maximum camshaft lift: intake 8.24 mm, exhaust 7.77mm; rocker arm ratio 1.70:1; maximum compression ratio 10.7:1; cylinder heads must be as delivered from the factory*
Cadillac CTS-V	*6200*	*3350*		

Note: Engine Displacements in this table are nominal. Each competitor shall have available definitive documentation (e.g., factory manual) of the original displacement for the engine used.

STO	Maximum Displacement	Minimum Weight	Restrictor	Notes
Chevrolet Camaro/Pontiac Firebird	5000	*2500*		Aftermarket K members are permitted.
Chevrolet Camaro/ PontiacFirebird	5700	*2950*		
Chevrolet Camaro/ PontiacFirebird	*6000*	*3240*		*Aftermarket K members are permitted.*
Chevrolet Camaro/ PontiacFirebird (Stock OEM LS3)	*6200*	*3110*		*Maximum camshaft lift: intake 8.24 mm, exhaust 7.77mm; rocker arm ratio 1.70:1; maximum compression ratio 10.7:1; cylinder heads must be as delivered from the factory. Aftermarket K members are permitted.*
Chevrolet Camaro/ PontiacFirebird	*6200*	*3350*		*Aftermarket K members are permitted.*
Chevrolet Camaro (2010) (LS6)	*5700*	*2950*		
Chevrolet Camaro (2010) (Stock OEM LS3)	*6200*	*3100*		*Maximum camshaft lift: intake 8.24 mm, exhaust 7.77mm; rocker arm ratio 1.70:1; maximum compression ratio 10.7:1; cylinder heads must be as delivered from the factory. Aftermarket K members are permitted.*
Chevrolet Camaro (2010) (LS3)	*6200*	*3350*		
Chevrolet Corvette	5700	*2950*		

Note: Engine Displacements in this table are nominal. Each competitor shall have available definitive documentation (e.g., factory manual) of the original displacement for the engine used.

STO	Maximum Displacement	Minimum Weight	Restrictor	Notes
Chevrolet Corvette	6000	*3240*		The top 12 inches of the firewall must be covered with metal or reflective heat shielding material. The OE firewall may also be replaced with a metal piece running between the A-pillars. LS2 cars may use the LSX cast iron block with OEM LS2 bore and stroke.
Chevrolet Corvette (Stock OEM LS3)	*6200*	*3110*		*Maximum camshaft lift: intake 8.24 mm, exhaust 7.77mm; rocker arm ratio 1.70:1; maximum compression ratio 10.7:1; cylinder heads must be as delivered from the factory*
Chevrolet Corvette	6200	*3350*		
Chevrolet Corvette	7000	3300	*75*mm flat plate or 45mm SIR	
Chevrolet Corvette L98, LT1, LT4	383 ci.			Max bore 4.00" Max stroke 3.75"
Dodge Viper	8000	3135	60mm flat plate	*OEM fuel tank may be used.*
Dodge Viper	8300	3300	60mm flat plate	*55mm flat plate restrictor required by 3/1/11. OEM fuel tank may be used.*
Dodge Viper	8400	3400	60mm flat plate	*55mm flat plate restrictor required by 3/1/11. OEM fuel tank may be used.*
Dodge Viper ACR	7990	2780	60mm flat plate	*OEM fuel tank may be used.*
Dodge Neon SRT-4	2400	3000		Alternate Turbo permitted
Ferrari 355	3500	2780		
Ferrari 360	3600	2780		

Note: Engine Displacements in this table are nominal. Each competitor shall have available definitive documentation (e.g., factory manual) of the original displacement for the engine used.

STO	Maximum Displacement	Minimum Weight	Restrictor	Notes
Ferrari 430	4310	*3250*		Kessel 430 GT3 front fenders, hood and bumper permitted; if installed, single radiator is permitted. Must conform to 9.1.4.*F*.7.
Ferrari 430 Challenge	4310	*2950*		*Must be prepared to the 2006 Ferrari Challenge engine and transmission specifications; DOT tires per 9.1.4.P.1; weight as specified; side windows must be removed; OEM carbon brakes or the Ferrari steel brakes from the 360 Challenge car (F 355 x 32 vented disc, R 330 x 18 vented disc) are permitted; If 18 inch "360" brakes are used, 18 inch wheels are permitted; 19 inch Ferrari Challenge wheels as delivered from factory permitted*
Ford Mustang	4600	*2380*		Aftermarket K members are permitted. *OEM independent rear suspension is permitted.*
Ford Mustang (pushrod)	5000	*2550*		Aftermarket K members are permitted. *OEM independent rear suspension is permitted.*
Ford Mustang (Boss 302)	5000	*3100*		*Allow Laguna Seca intake manifold and throttle body. OEM independent rear suspension is permitted.*
Ford Mustang	5400	*2790*		Aftermarket K members are permitted. *OEM independent rear suspension is permitted.*
Ford Mustang	5800	*3000*		Aftermarket K members are permitted. *OEM independent rear suspension is permitted.*

Note: Engine Displacements in this table are nominal. Each competitor shall have available definitive documentation (e.g., factory manual) of the original displacement for the engine used.

STO	Maximum Displacement	Minimum Weight	Restrictor	Notes
Honda S2000	2000/2200	2600		Super-charger permitted
Lotus2-Eleven GT4 Supersport	1800	2100		
Maserati Trofeo Light	4244	2900		
Mazda RX-7		*2750*		*OEM Twin Turbo Charged required*
Mazda RX-7		*2800*		*3 Rotor Renisis permitted*
Mistubishi/ DSM	2000	3000		Alternate Turbo permitted
Mitsubishi/ DSM	2400	3000		Alternate Turbo permitted
Mitsubishi Evo/ DSM	*2000*	*3000*		*OEM Twin Turbo Charged required*
Nissan 300ZX	*3000*	*3000*		*OEM Twin Turbo Charged required*
Nissan 350Z	3500	2450		
Nissan 350Z/370Z	3700	2600		
Pontiac GTO	6000	3300		
Pontiac GTO	5700	3135		
Pontiac Solstice	2000	3000		Alternate Turbo permitted
Porsche 996	3600	2808		
Porsche 996TT	*3600*	*3050*		*Must meet WC VTS for engine and turbochargers. Dated 2/11/09*
Porsche 997	3600	2960		
Saleen SR	5800	3190		
Toyota Supra		*3000*		*OEM Twin Turbo Charged required*

NOTES:

9.1.4.2 STU SPECIFIC TECHNICAL REGULATIONS

A ***Bodywork***

1. All cars may replace the hood and trunk/deck lid with non-metallic composite parts. The OEM profiles shall be maintained on the part. All other body panels shall be OEM parts.

2. The OEM front and rear fascias shall maintain the OEM crushable structure/support. The OEM crushable structure/support may be lightened as long as it is still recognizable as being the OEM crushable structure/support. The bumper shock absorbers may be removed. The OEM front and rear fascias shall be attached at the stock locations, but fasteners are free.

3. Fasteners are free provided they are of the same material family and diameter as the fastener it is replacing.

B. **Engine*s***

1. Engines up to *6* cylinders and 3000 cubic centimeters factory displacement are permitted*, plus any others listed in 9.1.4.2.H.*

2. All cars shall use the installed engine's stock air metering device (e.g., throttle body) and intake manifold, unless noted otherwise.

C. **Drivetrain**

1. Carbon clutches are not permitted.

2. Engine and gearbox mounts may be solid.

3. Transmission and ratios are free. Forward gears are limited to *6* speeds.

***D*.** **Suspension**

Alternate suspensions are permitted. Alternate suspensions are limited to the original type. Items such as brake calipers, springs, and shock/struts shall remain located on the alternate suspension in the OEM location.

***E*.** **Brakes**

1. Rotors
   1 or 2 piece ferrous rotors *that do* not exceed 328mm *in* diameter *or* 32mm *in* thick*ness are permitted*.

2. Calipers
   The standard production calipers or any 4-piston calipers may be used.

F. **Wheels**

Wheels may not exceed 17.0 inches in diameter and 8.0 inches in width.

G **Weights and Engine Allowances**

Minimum weights for cars with normally aspirated piston engines will be determined by 1.1 lbs/cc displacement for the installed engine (see following table). Displacement is the factory displacement for the installed engine. For *the purpose of* weight assignment*,* engine displacement will be rounded to the nearest 100cc (e.g., 2150cc =

2200cc *and* 2149cc = 2100cc).

Factory Engine Displacement (cc)	Minimum Weight (lbs)
1600	*1760*
1700	1870
1800	1980
1900	2090
2000	2200
2100	2310
2200	2420
2300	2530
2400	2640
2500	2750
2600	2860
2700	2970
2800	3080
2900	3190
3000	3300

Alt*ernate* Engine Spec*ification*s		
Engine	Bore & Stroke (mm)	Notes
Nissan VQ30	93.0 x 73.3	Sleeving permitted

1. The Mazda 13B and Renesis rotary engines are permitted at 2400 lbs. The 13B may be street ported. The Renesis shall remain unported. The Mazda 12A Street Port is permitted at 2350 lbs.12A induction: 1 Nikki 4 barrel carburetor with primary chokes bored to match secondary chokes on a stock manifold*,* or 1 Auto-type 2 barrel *carburetor* with 38mm chokes on a "dual-y" manifold.

2. All turbocharged engines shall use a compressor inlet restrictor/ weight combination from the following table. Twin turbo engines are allowed on a case-by-case basis only.

Inlet Restrictor (mm)	Minimum Weight (lbs)
33	2200
35	2475
37	2770
39	3100
41	*3430*

3. The Volkswagen Jetta TDI is permitted using the SCCA Pro Racing TDI Cup rules and weight. *D*iesel fuel *must be used* in accordance with 9.3.26.A.

4. The Mazdaspeed Miata may use alternate turbo, Mazdaspeed part # 000-88-c-89.

STU	Maximum Displacement	Minimum Weight	Notes
Audi A4 Turbo	1797	Chart	
BMW E36 M3 (95-99)	3200	3200	Engines are permitted 0.040 overbore, 0.5 point increase in compression. Engines must use the OEM camshaft lift.
Chevy Camaro	3790	3200	Engines are permitted 0.040 overbore, 0.5 point increase in compression .Engines must use the OEM camshaft lift.
Chevy Cobalt SC	1998	2900	GM stage 2 kit allowed. OEM Camshaft lift.
Chevy Cobalt Turbo	1998	Chart	
Chevy HHR Turbo	1998	Chart	
Chrysler Crossfire	3199	3000	Engines are permitted 0.040 overbore, 0.5 point increase in compression. Engines must use the OEM camshaft lift.
Dodge SRT4	2458	Chart	
Ford Mustang	3797	3200	Engines are permitted 0.040 overbore, 0.5 point increase in compression. Engines must use the OEM camshaft lift.
Ford Mustang	4000	3300	Engines are permitted 0.040 overbore, 0.5 point increase in compression. Engines must use the OEM camshaft lift.
Lotus Elise SC	1796	2400	OEM pulley and injectors. OEM camshaft lift
Lotus Exige SC	1796	2400	OEM pulley and injectors. OEM camshaft lift
Mazda RX7 Turbo		Chart	

STU	Maximum Displacement	Minimum Weight	Notes
Mazdaspeed Miata	1839	Chart	Alternate turbo Mazdaspeed part # 000-88-c-89 permitted.
Mazdaspeed 3	2260	Chart	
Mercedes Benz CLK	3199	3000	Engines are permitted 0.040 overbore, 0.5 point increase in compression. Engines must use the OEM camshaft lift.
Mini Copper S SC	1598	2500	OEM pulley and injectors
Mini Cooper S	1598	Chart	
Mitsubishi Evo/DSM	1997	Chart	
Nissan 350Z	3000	3300	Nissan VQ30, 93.0 bore by 73.3 stroke
Pontiac Firebird	3790	3200	Engines are permitted 0.040 overbore, 0.5 point increase in compression. Engines must use the OEM camshaft lift.
Pontiac Solstice	1998	Chart	
Porsche 944		Chart	
Saturn Sky	1998	Chart	
Scion TC SC	2362	2300	TRD supercharger kit allowed. OEM camshaft lift.
Subaru Legacy	2457	Chart	
Subaru Impreza WRX	1994	Chart	
Subaru WRX	2457	Chart	
Volkswagen GTI/GLI	1984	Chart	

9.1.4.3 STL SPECIFIC TECHNICAL REGULATIONS (REGIONAL ONLY)

A. Bodywork

1. *All cars may replace the hood and trunk/deck lid with nonmetallic composite parts. The OEM profiles shall be maintained on the part. All other body panels shall be OEM parts.*

2. *The OEM front and rear fascias shall maintain the OEM crushable structure/support. The OEM crushable structure/support may be lightened as long as it is still recognizable as being the OEM crushable structure/support. The bumper shock absorbers may be removed. The OEM front and rear fascias shall be attached at the stock locations.*

3. *Fasteners are free provided they are of the same material family and diameter as the fastener it is replacing.*

B. Engines

1. *Engines up to 4 cylinders and 2000 cubic centimeters factory displacement are permitted, except those from cars and engines as follows:*

   The following vehicles in their entirety are ineligible for STL: Honda S2000, Acura Type R, Lotus Elise/Exige

   The engines from the following cars are ineligible for STL: Honda S2000, Acura Type R

   Turbocharged engines are not permitted in STL.

2. *All cars shall use the installed engine's stock air metering device (e.g., throttle body) and intake manifold, unless noted otherwise.*

3. *Manifold and cylinder head port matching is permitted. No material may be removed further than one (1) inch in from the manifold to cylinder head mounting faces. Carburetor mounting surfaces shall not be modified. External dimensions of the cylinder head or intake manifold may not be reduced to facilitate internal porting. Two piece manifolds must not be port matched at their intermediate point. Valve guide material is unrestricted.*

4. *Valve seat and valve head angles are free.*

C. Drivetrain

1. *Carbon clutches are not permitted.*

2. *Engine and gearbox mounts may be solid, but must not relocate the engine or transmission in any direction.*

3. *Either the OEM transmission or an alternate transmission must be used; the alternate transmission must be from the same manufacturer as the vehicle (e.g., an Acura transmission may be installed in a Honda car). Alternate transmissions must be used in their entirety. Retrofitting OEM complete gear sets in an alternate transmission case is permitted.*

4. *Any final drive ratio is permitted provided it fits the differential/ transaxle housing without modification to the housing.*

5. *Any limited-slip or locking differential is permitted.*

D. Suspension

1. *Cars equipped with MacPherson strut suspension may de-camber wheels by the use of eccentric bushings at control arm pivot points, by the use of eccentric bushings at the strut-to-bearing-carrier joint, and/or by use of slotted adjusting plates at the top mounting point. If slotted plates are used, they shall be located on existing chassis structure and may not reinforce that structure. Material may be added or removed from the top of the strut tower to facilitate installation of adjuster plates.*

2. *For double wishbone suspension, camber adjustment devices (plates/shims/eccentric, etc.) are unrestricted but are limited to one per wheel. Front and rear upper control arms may be modified or replaced with items that allow camber and/or caster adjustment only. The OEM rear toe adjustment arm may be replaced with any substitute.*

3. *On other forms of suspension, camber adjustment may be achieved by the use of shims and/or eccentric bushings.*

4. *Independent rear suspension mounting holes may be slotted and reinforced for purposes of camber and/or toe adjustment. Material may be removed from the top of the strut tower to facilitate installation of adjuster plate.*

5. *Bushing material, including that used to mount a suspension subframe to the chassis, is unrestricted. This includes the use of spherical bearings, so long as no suspension component is modified to facilitate their installation. Retention of spherical bearings by use of tack welds is permitted, as long as the welds serve no other purpose.*

6. *Rubber bump stops may be removed, modified, or replaced, but their chassis mounts, brackets, etc., may not be altered in any way.*

7. *No other relocation or reinforcement of any suspension component or mounting point is permitted.*

8. *Hardware items (nuts, bolts, etc.) may be replaced by similar items performing the same fastening function(s).*

E. Brakes

1. *OEM brake systems must be used. Alternate OEM brakes rotors or calipers from the same manufacturer will be considered.*

2. *Anti-Lock Braking Systems: Any car equipped with an OEM ABS system may use the OEM system only as installed.*

F. Wheels

1.Wheels may not exceed 17.0 inches in diameter nor 7.0 inches in width.

G. Weight Requirements

1. *Minimum weights for cars with piston engines will be determined by 1.3 lbs/cc displacement for the installed engine (see following*

STCS

table). Displacement is determined by the factory displacement for the installed engine. Cars with 3 valves/cylinder engines may reduce their weight by 1 percent. Cars with 2 valves/cylinder engines may reduce their weight by 2 percent. For weight assignment purposes engine displacement will be rounded to the nearest 100cc (e.g., 2150cc = 2200cc and 2149cc = 2100cc).

Factory Engine Displacement (cc)	*Minimum Weight (lbs.)*
Up to 1300	1690
1400	1820
1500	1950
1600	2080
1700	2210
1800	2340
1900	2470
2000	2600

2. *The Mazda 12A is permitted at 2225 lbs; Mazda 13B is permitted at 2615 lbs; no porting is permitted in either engine the 5th and 6th intake port actuators and valves may be removed or disabled.*

H. Car and Engine Specific Allowances
[None at this time.]

NOTES:

RACING RADIOS

The official two-way communications provider of: SCCA

Sales - Service - Support - Rentals

1.800.669.1522 - www.RacingRadios.com

The Leader In Racing Communications Worldwide

MOTOROLA
Authorized Two-Way Radio Dealer

BELL

hans

GoPro
Be a HERO.

Uniden

9.1.5. PRODUCTION CATEGORY

A. Philosophy

The Production category exists to provide the membership with an opportunity to compete in series produced cars. While a Production car retains many **stock components**, the current rules allow for high performance **modifications** to enhance the safety, power and handling of the car. Production cars are specified at two levels of preparation, Level 1 (Full Prep) and Level 2 (Limited Prep). The commitment for the future of Production is to the Level 2 formula. Every aspect of a car being classed will be considered. The normal criteria for consideration are, but not limited to: **engine** size and configuration, horsepower potential, drive-line **components**, brakes, car weight, **suspension** configuration, **wheels**, and **body** style. Any car with an aspect or aspects that the Club Racing Board feels has fallen outside the current classes and cars classed, can be excluded from one or all of the current Production classes. The Club can alter **specifications** to equate the competition potential of each car in its modified form.

B. Classification

The Club will use the following guidelines when determining a car's suitability for classification in the Production category:

1. Production cars are specified at two levels, Level 1 and Level 2. Cars can be specified at either level or a combination of both.
2. Classification will be based on the **specifications** of the base model of the car, as it was delivered for sale in the United States.
3. Cars submitted for new classification in the Production Category must be series produced in quantities of no less than 3000 within a twelve month period.

C. Specifications

The SCCA will publish Production Car **Specifications** (PCS) each year. The PCS will contain the **specifications** for each car eligible to compete in the Production Category for that calendar year.

1. Each line of the PCS will list the make, model(s), level of **drive train** and **suspension/steering** preparation, along with all other car specific **specifications**.
2. Cars can be updated or backdated within the **specifications** for the makes and models listed on the same **specification** line of the PCS.
3. The use of non **stock components** may be permitted. Non **stock components** can be permitted to equate competition potential.
4. **Track specifications** will be set at 103% of the car's **stock track** plus 2.5 inches.

D. Interpretation

1. An **addition**, **modification**, **substitution** or **removal**, must not be made unless specifically authorized.
2. An authorized **addition**, **modification**, **substitution** or **removal** can not perform a prohibited function. An authorized **addition**, **modification**, **substitution** or **removal** of one **component** does not permit the **addition**, **modification**, **substitution** or **removal** of any other **component** unless the **addition**, **modification**, **substitution** or **removal** is specifically authorized.
3. The levels of preparation on the cars **specification** line are the only

levels that apply to that car. Authorized **modifications** in one level of preparation can not be used to determine or justify authorized **modifications** in another level of preparation.

4. The entrant of a car prepared to any of the level 2 **specifications**, must be in possession of a factory workshop manual at all competitions.

5. When the PCS refers to a **component** as being unrestricted, this permits the **addition**, **modification**, **substitution** or **removal** of that **component**.

6. A rule that pertains to a specific **component** supersedes a general rule that might otherwise apply.

7. If any word is used in the Production car **specifications** is defined in the technical glossary of the GCR, it will be interpreted as defined. Terms with corresponding glossary definitions are bold highlighted throughout the PCS.

E. Authorized Modifications

1. Drive Train Level 1

a. **Drive Train Component Modification**

1. **Stock** and permitted alternate **components** of the **drive train** can be modified by any mechanical or chemical means. **Modification** of a **drive train component** does not permit relocation of that **component**.

2. No material or mechanical **extension** can be added to any **stock** or alternate **component**, unless specifically authorized by these rules. **Repairs** to a **stock** or alternate **component** are permitted, provided the **repair** serves no prohibited function.

3. **Stock** and permitted alternate **components** of the **drive train** can have thermal barrier and friction altering coatings applied.

b. **Induction System**

1. All inducted air must pass through the **venturi(s)** of the car's **carburetor(s)**. On cars where the use of one (1) 40 DCN, DCNF, IDF **carburetor** is required, can fit one (1) of the following permitted optional **carburetors**:
   1. Weber 32 DGV/DGAV/DGEV
   2. Weber 32/36 DGV/DGAV/DGEV
   3. Weber 32/36 DFV/DFAV/DFEV
   4. Weber 34 DAT/DATR/DATRA/DMTR
   5. Holley-Weber 5200.

   Carburetor jets, jet needles, **metering rods** and needle valves are unrestricted. **Choke** mechanisms, plates, rods, and actuating cables, wires, or hoses can be **removed**.

   Where Weber **carburetors** are specified, Weber type **carburetors** can be **substituted**. The following are permitted Weber type **carburetors**:
   1. Solex
   2. SK
   3. Mikuni
   4. Delorto
   5. Berg
   6. PMO
   7. EMPI

2. **Stock** or permitted alternate sidedraft **carburetor(s)** can use an adaptor plate and/or a spacer in **addition** to any **stock** spacer, between the **carburetor(s)** and the **intake manifold**. Material for the adaptor plate and spacer is unrestricted. No adaptor plate or spacer can serve any purpose other than to space out and/or mate the **carburetor(s)** to the permitted **intake manifold**. The adapter or spacer cannot create a plenum or change the **carburetor(s) orientation**. The maximum thickness for the adapter, spacer, **stock** spacer or combination of all is 1.25”. For the purpose of these rules an Isolator is a spacer.

3. **Stock** or permitted alternate downdraft **carburetor(s)** can use an adaptor plate and/or a spacer in **addition** to any **stock** spacer, between the **carburetor(s)** and the **intake manifold**. Material for the adaptor plate and spacer is unrestricted. No adaptor plate or spacer can serve any purpose other than to space out, or mate the **carburetor(s)** to the permitted **intake manifold**. The adapter or spacer cannot change the **carburetor(s) orientation**. Adaptors and spacers can have a **bore** larger than the throttle **bore** of the **stock** or permitted alternate **carburetor(s)**. The maximum thickness for the adapter, spacer, **stock** spacer or combination of all is 1.25”. For the purpose of these rules an Isolator is a spacer.

4. Car’s permitted to utilize **fuel injection**, must use the **stock manifold** and **throttle body**. The **throttle body bore** size must remain **stock**. The **throttle body** can be ported and **polished**. The number of **injection nozzles** must remain the same as **stock**. The mounting position and injection point of the **injection nozzle** must be **stock**. The **stock** type of **fuel injection** must be maintained (electronic, mechanical, Bosch CIS, etc.). The **fuel injection system** is otherwise unrestricted.

5. All carburetors must retain the **stock** method of fuel distribution. Utilization or **modification** of a carburetor’s **components** to effect an annular discharge configuration is prohibited.

6. **Air cleaners**, **velocity stacks**, air supply **ducts** and **cold air boxes** are unrestricted.

7. **Stock** or permitted alternate **intake manifold(s)** can be ported and **polished**. It/they can be cut apart to facilitate this work. When the **manifold** is re-welded, the external dimensions of the **manifold** must remain unchanged from **stock**.

8. No portion of the **intake manifold(s)** can extend into the **inlet ports** of the cylinder head or **rotary engine** end plate. No **modification** of the cylinder head or end plate is allowed when fitting a permitted alternate **intake manifold**. Port to port **balance pipes** or tubes in all **intake manifolds** can be plugged or restricted.

9. The **accelerator pedal** and **linkage** to the **throttle butterfly** is unrestricted. Electric throttle control is prohibited unless fitted as **stock**. Two spring loaded **systems** of positive throttle closure are strongly recommended.

c. **Fuel pumps**, lines, filters, and pressure regulators are unre-

stricted, provided no **component** serves any fuel cooling purpose. **Fuel lines** can pass through the driver/passenger compartment. If a mechanical pump is **removed**, a blanking plate can be used to cover the **stock** opening.

d. Emission system **components**, control devices, associated lines, nozzles and wiring must be **removed** and any resultant holes plugged. The plugs must serve no other purpose.

e. Cylinder Head
   1. Porting, **polishing**, and machining within the limits of Production Car Rule E.1.a.1 E.1.a.2., is permitted. **Valve guides** and **valve seats** are unrestricted.
   2. If the **stock fuel injection** is **removed** and **carburetors** are utilized, the **stock fuel injection** ports in the cylinder head must be plugged. The plugs must serve no other purpose.
   3. The cylinder head can be machined to utilize **o-rings** to replace or supplement the cylinder head **gasket**.
   4. Holes resulting from the **removal** of **EGR valves** and air nozzles must be plugged. The plugs must serve no other purpose.

f. **Camshaft** and **Valve Gear**
   1. **Camshafts** are unrestricted. Any lifters, **tappets** or cam followers of the same type and diameter as **stock** are permitted. The interchange of hydraulic and solid lifters is permitted.
   2. Camshaft timing chains, **gears**, belts, and **sprockets** are unrestricted provided that they are of the same type and outside diameter as fitted **stock**. Single row or double row camshaft timing chains can be used. **Adjustable timing gears** are permitted.
   3. A timing chain/belt tensioner can be added to an **engine** where a tensioner is not fitted as **stock**, provided that it acts upon the portion of the chain/belt that travels from the final cam **sprocket**/**gear** to the **crankshaft**. The **timing belt** cover can be **removed**.
   4. Any **metal valves** meeting the specified head diameter can be used. Any **valve springs** of the same type as **stock** can be used. **Valve retainers**, lash pads, **valve keepers**, **seals** and adjustment shims are unrestricted.
   5. **Pushrods**, **valve rocker arms**, shafts and attendant assemblies are unrestricted.

g. **Block** and Cylinders
   1. The **block** can be rebored no more than 1.2mm (.0472 in) larger than the maximum dimension given on the **specification** line for that make, model, and **displacement**. A cylinder **block** from any model from the same manufacturer, which is of the same material and dimensionally identical throughout, except for non-critical **bosses**, is permitted. **Oil passages** can be re-routed, enlarged, restricted or plugged.
   2. Cylinders or **cylinder sleeves** of any material can be fitted to the **block**.
   3. C**rankshaft main bearing caps** and **main bearing cap** bolts

are unrestricted. **Crankshaft main bearing cap** girdles are unrestricted. **Crankshaft main bearing caps** can be more than one piece.

4. The **block** can be machined to utilize **o-rings** to replace or supplement a cylinder head **gasket**.

5. **Crankshaft** oil **seal(s)** are unrestricted.

h. **Pistons** and **Connecting Rods**

1. **Pistons**, pins, clips and/or pin retainers and **piston rings** are unrestricted. **Pistons** must be constructed of **metal**.

2. Alternate **ferrous connecting rods** of the same crank pin center to the piston pin center dimension as **stock** are permitted.

3. **Connecting rod** bolts and nuts are unrestricted.

i. **Crankshaft** and **Flywheel**

1. An alternate **crankshaft** is permitted. The crankshaft must be constructed of **ferrous** material, and must have the same **stroke** as **stock**. Journal diameters can be a maximum undersize of 0.045 from **stock** diameter. The crankshaft must retain the **stock** throw angles and **firing order**.

2. The direction of **crankshaft** rotation must remain **stock**.

3. External **Crankshaft vibration dampeners** are unrestricted.

4. Any **flywheel** of **stock** diameter or larger can be used, provided it attaches to the standard or permitted alternate **crankshaft** at the **stock** location. **Additional fasteners** can be used. The diameter of the **flywheel** includes the diameter of the **starter ring**. Cars that are permitted a specific alternate **transmission** on the **specification** line can use a **flywheel** of **stock diameter** or larger for that alternate **transmission**.

5. **Clutch** assemblies, clutch linkage and release bearings are unrestricted. Carbon **clutch components** are prohibited.

j. Oiling **System**

1. Any mechanically driven **oil pump** can be used. Chassis **components** can be modified to allow installation of the **oil pump**. **Dry sump systems** are permitted. The **dry sump** tank must be mounted within the **bodywork**.

2. The **Oil pan**/sump, **scraper(s)**, **baffle(**s), **windage tray(s)**, oil pickup(s), pressure accumulator(s) and **oil filter(s)** are unrestricted. The filter(s) and pressure accumulator(s) must be securely mounted within the **bodywork**. **Oil lines** are unrestricted. **Oil Lines** can pass through the driver/passenger compartment.

3. **Breather vents** are unrestricted.

4. No part of the oiling **system** can be connected to the **exhaust system**.

k. Electrical **System**

1. The use of any driver operated electric **starter** is permitted. The **starter** must be installed in the same general location as the **stock starter**. The **starter** must be mounted on the same side of the **flywheel** and **engine** as **stock**.

2. **Ignition systems** are unrestricted. **Magneto ignition systems** are prohibited. If the distributor is **removed** a blanking plate can be fitted in its place. **Components** that allow the incremental adjustment of ignition timing by the driver during competition are prohibited.

3. The **generator** or **alternator** is unrestricted. If a **generator** or **altenator** is used it must be mounted in the same general location as **stock**.

4. **Batteries** are unrestricted.

5. All other **components** of the electrical **system** are unrestricted.

l. **Exhaust System**

1. The exhaust **header** and **exhaust system** is unrestricted. **Floor pans** can be altered only to recess **mufflers**. No **modifications** can be made to the **bodywork** to fit any other part of the **exhaust system**.

m. Other **Engine Components**

1. The use of alternate **engine components** which are normally expendable and considered replacement parts, such as **fasteners**, **gaskets**, **seals**, **bearings**, water pumps, etc., is permitted. Electrically driven water pumps are prohibited.

2. **Bushings** can be installed where none are fitted as **stock**, provided they are **concentric**, and that the **centerline** of the bushed part is not changed.

3. The **addition** of alignment aides, such as dowels, bolts or keys can be added to **engine components**.

4. Other than the limitations in 9.1.5.E.1.f.2, **engine** drive **pulleys** are unrestricted.

5. **Engine steady bars** are unrestricted.

6. **Engine mounts** of alternate design and/or material can be used, but there can be no change to the **engine's** fore, aft or vertical location except as permitted in 9.1.5.E.1.o.6. **Engine mounts** must attach to the **engine** in their **stock** location.

n. **Transmission**

1. The **Transmission** is unrestricted, providing that it is fit in the same basic location as **stock**. Sequential shifting **transmissions** are prohibited. Pneumatic, hydraulic or electric actuation of the **gear** shift mechanism is prohibited.

2. All **transmissions** must have a reverse **gear** that is operable by the driver from his normal seated position and capable of sustained movement of the car, under its own power, in the reverse direction. A driver operated device for locking out the reverse **gear** can be added, provided it does not prevent prompt engagement of reverse in an emergency situation.

3. Shift **linkage** is unrestricted. The shift **linkage** opening in the transmission tunnel or tunnel cover can be modified to allow the installation of the alternate shift **linkage**.

4. The **transmission** tunnel and tunnel cover can be altered to allow the installation of an alternate **transmission** and/or

drive shaft. Cars equipped with a removable **transmission** tunnel cover as **stock** can **substitute** the **stock transmission** tunnel cover with one of an alternate material.

o. **Final Drive**

1. **Driveshaft(s)** are unrestricted.
2. **Final drive ratio** is unrestricted.
3. Internal **differential components** are unrestricted. Electric control of the **differential** is prohibited.
4. **Substitution** of the **differential housing** is only permitted on front **engine**/front drive or rear **engine**/rear drive cars through the use of an alternate **transaxle**.
5. **Axle shafts**, **bearings**, **bearing carriers**, **hubs**, and **universal joints**/CV joints are unrestricted.
6. **Transverse engine** cars can rotate the **engine** about the **crankshaft centerline** to align **axle shafts**/**constant velocity joints**. On rear **engine**/rear drive cars the **engine**/**drive train** can be relocated vertically upward, to a maximum of one inch, to allow alignment of **suspension** and driveline **components**.

2. Drive Train Level 2

a. **Drive train Component Modification**

1. **Stock** and permitted alternate **components** of the **drive train** can be modified by any mechanical or chemical means. **Modification** of a **drive train component** does not permit relocation of that **component**.
2. No material or mechanical **extension** can be added to any **stock** or alternate **component** unless specifically authorized by these rules. **Repairs** to a **stock** or alternate **component** are permitted provided the **repair** serves no prohibited function.
3. **Stock** and permitted alternate **components** of the **drive train** can have thermal barrier and friction altering coatings applied.

b. **Induction System**

1. All inducted air must pass through the **venturi(s)** of the cars **carburetor(s)**. All single carbureted cars may fit a permitted optional **carburetor**. Permitted optional **carburetors** are:
   1. Weber 32 DGV/DGAV/DGEV
   2. Weber 32/36 DGV/DGAV/DGEV
   3. Weber 32/36 DFV/DFAV/DFEV
   4. Weber 34 DAT/DATR/DATRA/DMTR
   5. Holley-Weber 5200

   The **stock** or permitted alternate **carburetor** must not be modified. **Carburetor jets, jet needles**, **metering rods** and needle valves are unrestricted. **Choke** mechanisms, plates, rods, and actuating cables, wires, or hoses can be **removed**. The number of **carburetors** must not be changed from **stock**.
2. **Stock** or permitted alternate sidedraft **carburetor(s)** can use an adaptor plate and/or a spacer in **addition** to any **stock** spacer, between the **carburetor(s)** and the **intake manifold**. Material for the adaptor plate and spacer is unrestricted.

No adaptor plate or spacer can serve any purpose other than to space out and/or mate the **carburetor(s)** to the permitted **intake manifold**. The adapter or spacer cannot create a plenum or change the **carburetor(s) orientation**. The maximum thickness for the adapter, spacer, **stock** spacer or combination of all is 1.25”. For the purpose of these rules an Isolator is a spacer.

3. **Stock** or permitted alternate downdraft **carburetor(s)** can use an adaptor plate and/or a spacer in **addition** to any **stock** spacer, between the **carburetor(s)** and the **intake manifold**. Material for the adaptor plate and spacer is unrestricted. No adaptor plate or spacer can serve any purpose other than to space out, or mate the **carburetor(s)** to the permitted **intake manifold**. The adapter or spacer cannot change the **carburetor(s) orientation**. Adaptors and spacers can have a **bore** larger than the throttle **bore** of the **stock** or permitted alternate **carburetor(s)**. The maximum thickness for the adapter, spacer, **stock** spacer or combination of all is 1.25”. For the purpose of these rules an Isolator is a spacer.

4. Fuel Injection: All inducted air must pass through the **throttle body** and be subject to control by the throttle butterfly. The **stock throttle body** casting/housing must be retained. The inside dimensions of the **throttle body** casting/housing and all dimensions of the throttle butterfly must remain **stock**. The throttle butterfly shaft must not be relocated. The outside diameter of the portion of the throttle butterfly shaft located in the **throttle body** bore must be no smaller than **stock**. The contour of the interface between the throttle butterfly shaft and the butterfly must remain **stock**. The throttle butterfly and any throttle butterfly to shaft screws/bolts can be attached to the throttle butterfly shaft by any means including welding or brazing. Holes or slots can be created in the throttle butterfly for purposes of idle adjustment only. The number of injectors must remain **stock**. The mounting position and injection point must be **stock**. The original type of fuel injection must be maintained (electronic, mechanical, Bosch CIS, etc.). In all other respects the fuel injection system is unrestricted.

5. All carburetors must retain the **stock** method of fuel distribution. Utilization or **modification** of a carburetor’s **components** to effect an annular discharge configuration is prohibited.

6. **Air cleaners**, **velocity stacks**, air supply **ducts** and **cold air boxes** are unrestricted.

7. The **intake manifold** may be port matched on the port mating surface to a depth of no more than one inch. **Balance pipes** or tubes on all **intake manifolds** can be plugged or restricted. The **intake manifold** can not otherwise be modified.

8. The **accelerator pedal** and **linkage** to the **throttle butterfly** is unrestricted. Electric throttle control is prohibited unless fitted as **stock**. Two spring loaded **systems** of positive throttle closure are strongly recommended.

c. **Fuel pumps**, lines, filters, and pressure regulators are unre-

stricted, provided no **component** serves any fuel cooling purpose. **Fuel lines** can pass through the driver/passenger compartment. If a mechanical pump is **removed**, a blanking plate can be used to cover the **stock** opening.

d. Emission system **components**, control devices, associated lines, nozzles and wiring must be **removed** and any resultant holes plugged. The plugs must serve no other purpose.

e. The Cylinder Head can only be modified:
   1. To install an alternate **camshaft**, and/or adjustable cam **gears**.
   2. To port match on the port mating surface to a depth of no more than one inch.
   3. To facilitate the installation of permitted alternate **components**, provided the **modification** serves no other function.
   4. To achieve the maximum specified **compression ratio** by the machining of the deck surface.
   5. To completely plug the holes resulting from the **removal** of **EGR valves** and air nozzles. The plugs must serve no other purpose.
   6. To completely plug the **stock fuel injection** ports in the cylinder head, if the **stock fuel injection** is **removed** and **carburetors** are utilized. The plugs must serve no other purpose.
   7. To utilize **O-rings** to replace or supplement a cylinder head **gasket**.
   8. To fit **valve seats**. **Valve seats** are unrestricted. Valve seat angles are unrestricted. The valve seat insert can be no taller than one half inch.

f. **Camshaft** and **Valve Gear**
   1. **Camshafts** are unrestricted. Any lifters, **tappets**/cam followers of the same type and diameter as **stock** are permitted. The interchange of hydraulic and solid lifters is permitted.
   2. Camshaft timing chains, **gears**, belts, and **sprockets** are unrestricted provided that they are of the same type, and outside diameter as fitted **stock**. Single row or double row timing chains can be used. **Adjustable timing gears** are permitted.
   3. A timing chain/belt tensioner can be added to an **engine** where a tensioner is not fitted as **stock**, provided that it acts upon the portion of the chain/belt that travels from the final cam **sprocket**/**gear** to the **crankshaft**. The **timing belt** cover can be **removed**.
   4. Any **ferrous** (including stainless steel) material **valves** meeting the specified head and **stock** stem diameter can be used. Any **ferrous valve springs** of the same type as **stock**, can be used. **Valve retainers, Spring retainers,** lash Pads, **valve keepers**, **seals** and adjustment shims are unrestricted.
   5. **Pushrods** are unrestricted. Rocker shafts when utilized in the same stock system can be replaced by an alter-

nate shaft, and is unrestricted. **Valve rocker arms**, cam followers, rocker ratios and rocker/follower ratios must be stock.

6. **Valve guide** material is unrestricted, but must have **stock** external dimensions.

7. Where maximum valve lift is specified, valve lift is measured at the **valve** with zero lash or clearance.

g. **Block** and Cylinders

1. The **block** can be rebored no more than 1.2mm (.0472 in) larger than the maximum dimension given on the **specification** line for that make, model, and **displacement**. A cylinder **block** from any model from the same manufacturer, which is of the same material and dimensionally identical throughout, except for non-critical **bosses**, is permitted. **Oil passages** can be re-routed, enlarged, restricted or plugged.

2. Cylinders or **cylinder sleeves** of any material can be fitted to the **block.**

3. C**rankshaft main bearing caps** and **main bearing cap** bolts are unrestricted. **Crankshaft main bearing cap** girdles are unrestricted. **Crankshaft main bearing caps** can be more than one piece.

4. The **block** can be machined to utilize **o-rings** to replace or supplement a cylinder head **gasket**.

5. **Crankshaft** oil **seal(s)** are unrestricted.

h. **Pistons** and **Connecting Rods**

1. **Pistons**, pins, clips and/or pin retainers and **piston rings** are unrestricted. **Pistons** must be constructed of **metal**.

2. **Stock connecting rods** are required, but can be lightened and **balanced.**

3. **Connecting rod** bolts and nuts are unrestricted.

i. **Crankshaft** and **Flywheel**

1. **Stock crankshafts** are required. The **Crankshaft** can be lightened and **balanced**. Journal diameters can be a maximum undersize of 0.045 from **stock** diameter.

2. The direction of the **crankshaft** rotation must remain **stock**.

3. The use of any external **crankshaft vibration dampener** is permitted.

4. Any **flywheel** of **stock** diameter or larger can be used, provided it attaches to the standard or permitted alternate **crankshaft** at the **stock** location. **Additional fasteners** can be used. The diameter of the **flywheel** includes the diameter of the **starter ring**. Cars that are permitted a specific alternate **transmission** on the **specification** line can use a **flywheel** of **stock** diameter or larger for that alternate **transmission**.

5. **Clutch** assemblies, clutch linkage and release bearings are unrestricted. Carbon **clutch components** are prohibited.

j. Oiling **System**

1. Any mechanically driven **oil pump** can be used. Chassis

components can be modified to allow installation of the **oil pump**. **Dry sump systems** are prohibited.

2. The **Oil pan**/sump, **scraper(s)**, **baffle(**s), **windage tray(s)**, oil pickup(s), pressure accumulator(s) and **oil filter(s)** are unrestricted. The filter(s) and pressure accumulator(s) must be securely mounted within the **bodywork**. **Oil lines** are unrestricted. **Oil Lines** can pass through the driver/passenger compartment.

3. **Breather vents** are unrestricted.

4. No part of the oiling **system** can be connected to the **exhaust system**.

k. Electrical **System**

1. The use of any driver operated electric **starter** is permitted. The **starter** must be installed in the same general location as the **stock starter**. The **starter** must be mounted on the same side of the **flywheel** and **engine** as **stock**.

2. **Ignition systems** are unrestricted. **Magneto ignition systems** are prohibited. If the distributor is **removed** a blanking plate can be fitted in its place. **Components** that allow the incremental adjustment of ignition timing by the driver during competition are prohibited.

3. The **generator** or **alternator** is unrestricted. If a **generator** or **altenator** is used it must be mounted in the same general location as **stock**.

4. **Batteries** are unrestricted.

5. All other **components** of the electrical **system** are unrestricted.

l. **Exhaust System**

1. The exhaust **header** and **exhaust system** is unrestricted. **Floor pans** can be altered only to recess **mufflers**. No **modifications** can be made to the **bodywork** to fit any other part of the **exhaust system**.

m. Other **Engine Components**

1. The use of alternate **engine components** which are normally expendable and considered replacement parts, such as **fasteners**, **gaskets**, **seals**, **bearings**, water pumps, etc., is permitted. Electrically driven water pumps are prohibited.

2. **Bushings** can be installed where none are fitted as **stock**, provided they are **concentric**, and that the **centerline** of the bushed part is not changed.

3. The **addition** of alignment aides, such as dowels, bolts or keys can be added to **engine components**.

4. Other than the limitations in 9.1.5.E.1.f.2, **engine** drive **pulleys** are unrestricted.

5. **Engine steady bars** are unrestricted.

6. **Engine mounts** of alternate design and/or material can be used, but there can be no change to the **engine's** fore, aft or vertical location except as permitted in 9.1.5.E.1.o.6. **Engine mounts** must attach to the **engine** in their **stock** location.

n. **Transmission**

1. The **Transmission** is unrestricted, providing that it is fit in the same basic location as **stock**. Sequential shifting **transmissions** are prohibited. Pneumatic, hydraulic or electric actuation of the **gear** shift mechanism is prohibited.

2. All **transmissions** must have a reverse **gear** that is operable by the driver from his normal seated position and capable of sustained movement of the car, under its own power, in the reverse direction. A driver operated device for locking out the reverse **gear** can be added, provided it does not prevent prompt engagement of reverse in an emergency situation.

3. Shift **linkage** is unrestricted. The shift **linkage** opening in the transmission tunnel or tunnel cover can be modified to allow the installation of the alternate shift **linkage**.

4. The **transmission** tunnel and tunnel cover can be altered to allow the installation of an alternate **transmission** and/or **drive shaft**. Cars equipped with a removable **transmission** tunnel cover as **stock**, can **substitute** the **stock transmission** tunnel cover with one of an alternate material.

5. There is no weight penalty for the use of a **stock transmission** utilizing **stock** case, **gear ratios** and synchromesh style **gear** engagement. An alternate **transmission** that uses **stock** type, circular, beveled **synchronizers**, imposes a 2.5% weight penalty. An alternate **transmission** that uses a **gear** engagement mechanism different than **stock** type, circular, beveled **synchronizers** imposes a 5% weight penalty.

o. **Final Drive**

1. **Drive shaft(s)** are unrestricted.

2. **Final drive ratio** is unrestricted.

3. Internal **differential components** are unrestricted. Electric control of the **differential** is prohibited.

4. **Substitution** of the **differential housing** is only permitted on front **engine**/front drive or rear **engine**/rear drive cars through the use of an alternate **transaxle**.

5. **Axle shafts**, **bearings**, **bearing carriers**, **hubs**, and **universal joints**/CV joints are unrestricted.

6. **Transverse engine** cars can rotate the **engine** about the **crankshaft centerline** to align **axle shafts**/**constant velocity joints**. On rear **engine**/rear drive cars the **engine**/**drive train** can be relocated vertically upward, to a maximum of one inch, to allow alignment of **suspension** and driveline **components**.

3. Drive Train Rotary Engine Level 2

a. **Modifications**

1. The capacity of the **working chambers** must not be changed from **stock**.

2. The **eccentric shaft** can be replaced with another made from a **ferrous** material, but no changes in the eccentricity of journal dimensions are permitted.

3. **Rotary engine rotors** are unrestricted.

4. Street Porting of the **engine** only. Bridge porting, peripheral porting, and eyelash porting are prohibited. Contact SCCA National Office for details of Street porting.

5. **Modification** of the water jacket in the area of the **spark plug**, for cooling purposes is permitted.

4. Suspension and Steering Level 1

a. The **stock system** of **suspension**, e.g., live axle, swing axle, **McPherson strut**, A-arm, etc. must be retained.

b. **Ride height** is unrestricted.

c. Bolt on **suspension cross members/sub-frames** are unrestricted.

d. **Suspension pickup/pivot points** are unrestricted. **Suspension Components** including **anti-roll bars**, **camber compensating** devices, **panhard rods**, **watts linkage** and **suspension stabilizers** are unrestricted. These **components** can pass through any portion of the car with the exception of exterior **body work**. If these **components** extend into the driver/passenger/**trunk** compartments, they must be covered with **metal** panels.

e. **Suspension bushings**, **bearings** and **ball joints** are unrestricted.

f. Springs and **Shock Absorbers**

1. Any springs or **torsion bars** can be used, provided the quantity of these items remains as **stock**. The location and **attachment points** of springs and **torsion bars** are unrestricted. Spacers/lowering blocks can be used between leaf springs and the **axle housing**. The use of **tender springs** is permitted, provided the **tender springs** are completely compressed when the car is at static **ride height**. Static **ride height** will be determined with the driver seated in the normal driving position.

2. **Shock absorbers** and **McPherson struts**/**Chapman struts** are unrestricted. All cars can fit **coil-over** type springs with tubular, load bearing **shock absorbers** or struts. Such items must not exceed one spring and shock/strut per **wheel**.

A. **Attachment points** for the **shock absorbers** and **McPherson struts**/**Chapman struts** are unrestricted. Rear **attachment points** can be located in the driver/passenger/**trunk** compartment, but must be covered with **metal** panels.

B. When lever shocks are replaced with tubular shocks, the entire shock assembly can be replaced with a link and bracket that performs the control function.

C. **Bump stops** and bracketry are unrestricted.

D. No shock absorber, **McPherson struts**/**Chapman struts** can be capable of adjustment by the driver while the car is in motion, unless fitted as **stock**.

3. Rockers, **rocker arms**, push and/or pull rods are prohibited.

g. **Steering**

1. The **stock steering system** must be retained e.g. **rack and pinion**, reciprocating ball, **worm and sector**. The **steering system** can be relocated.

2. **Steering system components** are unrestricted.

3. The **steering column** is unrestricted. A collapsible type **steering column** is strongly recommended. The driver's normal seated position must not be relocated.

4. Cars equipped with **power steering** as standard equipment can **modify**, **substitute**, disable and/or **remove** the power pump, related hoses and mounting brackets.

5. Suspension and Steering Level 2

a. Ride height is unrestricted.

b. **Suspension Components**

1. **Suspension control arms** are unrestricted, provided the quantity of these items remains as **stock**.

2. **Suspension bushings**, **bearings** and **ball joints** are unrestricted.

3. Any **anti-roll bar(s)** and rear axle **traction bar(s)**, rear axle **panhard rod** and **watts linkage** can be added or **substitute**d, provided its/their installation serves no other purpose. The mounts for these devices can be welded or bolted to the car. These devices and their mounts can not be located in the **trunk** or driver/passenger compartment unless fitted as **stock**. Rear axle **traction bar(s)** used to control **axle housing** rotation must be solid bar or tube.

4. When a cars **anti-roll bar** also acts as a **suspension** locating device, the bars **attachment points** and pivot points on the chassis and **suspension control arms** must remain in the **stock** location.

5. **Bump stops** and bracketry are unrestricted.

c. **Suspension** Mounting Points

1. Cars equipped with a **McPherson strut/Chapman strut suspension** can adjust **camber** and **caster** at the upper strut mounting point. The upper strut mounting point must remain on **stock** chassis structure. Slotted adjusting plates at the upper mounting point are permitted. The slotted plates must be located on the **stock** chassis structure. Material can be **removed** or added to the top of the strut tower to facilitate installation of the slotted adjuster plate, provided it serves no other purpose.

2. All forms of **suspension** can adjust **camber** and **caster** by the use of shims.

3. Rear **independent suspension** mounting holes can be slotted within the limits of the **stock** structure for the sole purpose of **camber** and/or **toe** adjustment.

4. **Suspension cross member/sub frame** mounting **bushing** material is unrestricted.

5. **Suspension pickup/pivot axis points** can be reinforced but must remain in the **stock** location.

d. Springs and **Shock Absorbers**

1. Any springs or **torsion bars** can be used, provided the quantity and type of these items remains as **stock**. Springs and **torsion bars** must be installed in the **stock** location using the **stock system** of attachment. The use of **tender springs** is permitted, provided the **tender springs** are completely

compressed when the car is at static **ride height**. Static **ride height** will be determined with the driver seated in the normal driving position.

2. **Shock absorbers** are unrestricted, provided the quantity and type (i.e. tube, lever) of these items remains as fitted **stock**. *The manner of attachment of the shock absorber is unrestricted and the upper attachment point may be raised along the axis of the stock shock.* The mounting of the remote reservoir of a **remote reservoir shock absorber** is unrestricted. No shock absorber can be capable of adjustment by the driver while the car is in motion, unless fitted as **stock**.

3. **Macpherson/chapman struts** must be installed in the **stock** location using the **stock system** of attachment. **Remote reservoir strut** dampeners are permitted. The mounting of the **remote reservoir** of a **remote reservoir Macpherson/chapman strut** is unrestricted. No **Macpherson/chapman strut** can be capable of adjustment by the driver while the car is in motion, unless fitted as **stock**.

4. **Macpherson/chapman strut:**
   A. **Macpherson/chapman strut** suspensions that are a two piece **spindle/bearing carrier** and bolt on damper design, can replace the bolt on damper portion of the **Macpherson/chapman strut** with any replacement damper.

   B. **Macpherson/chapman strut** suspensions that are a one piece **spindle/bearing carrier** and strut tube design, can **modify** the **stock** strut tube in order to fit a replacement damper, coil spring and perch. The **spindle/bearing carrier** portion of the strut can be modified in order to fit an alternate strut tube and any replacement damper. One piece design **Macpherson/chapman strut** suspensions can gusset between the tube and **spindle/bearing carrier** portion of the strut for the sole purpose of strengthening the strut tube.

   C. **Macpherson/chapman strut** suspensions that are a one piece **spindle/bearing carrier** and strut tube design that also incorporates an integral **steering arm** must retain the **stock steering arm** in its **stock** location.

   D. **Macpherson/chapman struts** that are a **bearing carrier**, cannot **modify** or replace the **bearing carrier** under the unrestricted **bearing carrier** rule in section 9.1.5.E.2.o.5.

5. All types of suspensions can **modify** the brake caliper mounting portion of the **spindle/bearing carrier**, if necessary to fit an approved alternate brake **caliper**.

6. Shackles or spacers/lowering blocks can be used with leaf springs to adjust **ride height**.

7. Spacers and threaded sleeves with adjustable spring seats can be used with coil springs. **Coil-over** threaded body shocks/struts are permitted if coil-over shocks/struts were fitted as **stock**.

8. **Bump stops** are unrestricted.

e. **Steering**
   1. **Steering system components** can be reinforced by the **addition** of material and/or the **addition** of support to the **stock component**.
   2. **Bushings** locating or retaining any **steering system components** can be replaced by **bushings** of any material. The alternate **bushing** can not relocate the **component** it retains.
   3. The outer **tie rod** end can be replaced by a **rod end**. The **rod end** can be coupled to the **steering system** by a rod or threaded tube of unrestricted origin and material. The tapered hole in the **steering arm** on the outboard side of the **tie rod** (**rod end**) can be drilled or reamed to allow a bolt to be used to retain the **rod end** to the **steering arm**. The **rod end** can be moved up or down by the installation of spacers for the sole purpose of reducing **bump steer**.
   4. The **steering column** is unrestricted. A collapsible type **steering column** is strongly recommended. The driver's normal seated position must not be relocated.
   5. Cars equipped with **power steering** as standard equipment can **modify**, **substitute**, disable and/or **remove** the power pump, related hoses and mounting brackets.

6. Cooling System Level 1 and 2

a. Water **radiators** are unrestricted. The **radiator** must be installed in approximately the same the location as **stock**. There can be no **modifications** to the body, chassis, or internal structure of the car to accommodate the **radiator**, other than mounting brackets and attachment **fasteners**. A separate **cooling system expansion tank** can be mounted in the **engine compartment**. Coolant lines can run through the driver/passenger compartment.

b. Coolant lines are unrestricted. Openings resulting from the **removal** of a coolant line can be plugged, the plugs must serve no other purpose. Internal cooling passages can be restricted or plugged, the plugs must serve no other purpose.

c. **Radiator Fans** are unrestricted. Electrically operated **fans** must be mounted within four (4) inches of the **radiator**.

d. **Radiator** Shroud
   1. **Radiator** shrouds are unrestricted.
   2. Sealing the area between the **radiator**, its shroud, any **fan(s),** and the **stock grille** opening is permitted. No alternate **radiator** shroud can extend behind the **radiator** further than the rear edge of the rearmost mounted **fan**. If no cooling **fan** is fitted, the alternate shroud must end at the rear most edge of the **radiator**.

e. Air cooled **engine** shrouding and **fans** are unrestricted.

f. **Thermostat** and **Thermostat** housings are unrestricted. **Thermostats** can be replaced with a **blanking sleeve** or restrictor.

g. Oil/**Lubricant** Coolers
   1. **Engine**, **transmission**, and **differential** coolers are unrestricted. Coolers must be mounted completely within or under the **bodywork**, but can not be mounted in the driver/passenger compartment.

2. **Transmission** and **differential** cooler pumps are unrestricted.

3. Air **ducts** can be fitted to the cooler(s). No **Ducting** can extend forward of the most forward part of the front of the **body** or front **air dam**.

7. **Brakes Level 1 and 2**

a. **Stock calipers** must be retained. Cars fitted with integral **hat brake rotors** can convert to a two piece design **hat** and **brake rotor**. The alternate design **hat** must be made of **ferrous** or aluminum material. Alternate discs can be used, but must be made of **ferrous** material. Alternate drums can be used, but must be made of a **ferrous** or aluminum material. Alternate discs and drums must be the **stock** diameter, width and design. **Brake rotors** can not be cross drilled or slotted unless fitted as **stock**.

b. Cars fitted with rear drum brakes, can convert to rear disc brakes. When converting from rear drum brakes to rear **disc brakes**:

1. Rear **brake rotors** can be no larger in diameter than the largest permitted front **brake rotor**. Rear **brake rotors** must be solid and made of a **ferrous** material. Rear **brake rotors** can not be cross drilled or slotted.

2. Rear **brake rotor hats** can be made of a **ferrous** or aluminum material.

3. Rear **calipers** and mounting brackets are unrestricted but must be made of a **ferrous** or aluminum material.

The standard and alternate brake listings on a vehicle's specification line, does not prohibit a car that was fitted with rear drum brakes as **stock** from converting to rear disc brakes under this rule.

c. Dual **braking systems** are required. Any dual brake **master cylinder(s)** and pedal assembly can be fitted. **Pressure equalizing** and **proportioning valve** devices are unrestricted.

d. **Servo assists** are unrestricted.

e. Drum brake **wheel cylinders** are unrestricted.

f. **Brake pads** and **brake linings** are unrestricted.

g. Brake lines are unrestricted.

h. The **hand brake** and its operating mechanism can be **removed**.

i. Brake **Ducting**

1. Brake air **ducts** can be fitted.

2. The front brake **duct** inlet(s) must not extend to the side beyond the **centerlines** of the front **wheels**, or forward of the forward most part of the front of the **body** or front **air dam**.

3. Rear brake **duct** inlet(s) must face forward, they must be located no more than 24" forward of the rear axle **centerline** and must not extend to the side beyond the **centerlines** of the rear **wheels**.

4. **Backing plates** and **dust shields** are unrestricted.

8. **Wheels and Tires Level 1 and 2**
   a. **Wheels**, **wheel spacers** and **wheel fans** are unrestricted
   b. Spare tires and **wheels** must be **removed**.

9. **Body/Structure Level 1 and 2**
   a. **Modifications**
      1. The body, **unibody**, **frame and** their **components** can be lightened, provided that structural rigidity is not compromised to the point of requiring **additional** support. No non-**stock** openings can be created in the bodywork. The lightening of the cars structure can not create any openings into the **cockpit,** or from the **wheel well** to the **engine**/**trunk** compartments. Existing seams in the **unibody** and **frame** can be **welded**.
      2. The **hood**, **hatchback**, deck lid and **fenders** can be replaced by **components** of an alternate material, provided their appearance remains **stock**. Factory bolt-on **fenders** can be replaced in their entirety. Cars with non-removable **fenders** can replace the front **fender** panels going forward from the foremost door opening and the rear **fender** panels going rearward from the rearmost door opening. *Replacement components of an alternate material may not extend into the roof structure of a closed car above a horizontal line placed at the lowest point of the driver's door window opening.*
      3. *The exterior contour of all wheel openings may be **flared**. The **fender**/wheel opening or any other part of the **body** forming the wheel opening, when viewed from the top perpendicular to the ground, must cover the portion of the tire that contacts the ground while the car is at rest. The **flaring** of the exterior contour of any wheel openings may not alter the basic body configuration or change the wheel opening size, location or shape when viewed from the side.*
      4. One piece front **body** sections are permitted only on cars manufactured in that **stock** configuration. One piece front **body** sections must retain inner **wheel wells** if fitted as **stock**. The inner **wheel wells** can be constructed of an alternate material.
      5. **Wheel wells** can be altered, using the **stock** type of material, in order to provide clearance for tires and **wheels**. **Wheel well** alterations must not result in the creation of any **additional** openings between the **wheel well** and the **engine**, passenger and **trunk** compartments. Existing openings between the **wheel well** and these compartments can be covered but can not be enlarged. Non **metal wheel wells** can be **removed**. If the **removal** of the non **metal wheel well** creates an opening to the **engine**, passenger or **trunk** compartments the created openings must be covered.
      6. Misalignment or **modification** of the **bodywork** to create **ventilation** where none existed **stock**, is prohibited. All **bodywork** must be completely closed and securely fastened while the car is in competition. The **hood** and deck lid hinges can be **removed**. The **hood** and deck lid must be securely fastened; the manner in which they are secured is unrestricted. Door hinges must be retained in their **stock** location. Door hinges must be functional but

can be lightened. Doors must be securely fastened closed, provided they can be opened or **removed** quickly in an emergency situation. Door handles can be **removed** and any resultant holes must be covered. The cover must not change the **stock** exterior contour of the door.

7. **Bumpers** that are integrated into the front or rear **bodywork**, can be replaced by **replica components** of an alternate material. The energy absorbing bumper **components** behind the front or rear **bumper** cover can be **removed**. **Bumpers** which are not an integral part of the **body** can be **removed** or replaced by **components** of an alternate material, provided their appearance remains as **stock**. If a **bumper** is **removed**, all mounting bracketry which projects outside the **body** must also be **removed**. **Bumper** bracket holes in the **body** created by **removal** of a **bumper** can be covered provided the covering serves no other purpose.

8. Glass - Windshield and Door
   A. Open cars must **remove** the **windshield** glass, **door window** glass, **quarter window** glass, rear glass, vent glass, frames/channels and all mounting brackets. Window winding mechanisms can be **removed**. A replacement **windshield** must be installed. The replacement **windshield** must be fitted within the vertical planes of the front most and rear most elements of the **stock windshield** and frame. The replacement **windshield** must not exceed the height or width of the **stock windshield** and frame. Any portion of the **windshield** that is in the driver's line of sight, must be constructed of a clear material. No part of the replacement **windshield** can be constructed of glass.

   B. Closed cars can retain or replace the **stock** glass **windshield**. The replacement **windshield** must be constructed of a polycarbonate material with a minimum thickness of 6mm, and must be identical in size and **curvature** to the **stock** glass **windshield**. Replacement **windshields** must have a minimum of three inner supports to prevent the **windshield** from collapsing inward. Inner **windshield** supports must be a minimum of 0.75" by .125" straps of aluminum. The inner supports must be mounted a minimum of eight inches apart. Closed cars can replace the **rear window** with clear polycarbonate material having a minimum thickness of 3mm.

   C. Closed cars can **remove** all **door window**, **quarter window** and vent window glass. Window winding mechanisms can be **removed**. **Door window**, vent window and **quarter window** frames/channels can be **removed**. **Door window** slots can be covered. Closed cars can install clear polycarbonate material having a minimum thickness of 3mm to replace the **rear, door,** vent and **quarter window** glass. The windows in the rear door of a 4 door car and **quarter windows** can be run in their **stock** open or closed position. **Ducts** can be installed in the **door**, vent and **quarter windows** or resultant **door window** openings, for the sole purpose of supplying cooling air to the driver.

   D. **Targa type top** cars can be prepared to either closed

car or open car **windshield** and **window specifications**.

E. All glass sunroof and T-top panels must be **removed**. The resulting opening(s) must be covered with panels of **stock** contour and of the same material as the **stock** surrounding roof structure. **Stock metal** sunroof and T-top panels may be either securely retained in the closed position or replaced with panels of **stock** contour and of the same material as the **stock** surrounding roof structure.

9. Air Dams: An air dam can be fitted to the front of the car. It must not protrude beyond the overall outline of the car as viewed from above, or extend aft of the forward most part of the front fender opening (cutout), and must not be mounted more than four inches above the horizontal centerline of the front wheel hubs. An intermediate mounting device can be used on cars whose front bodywork is above the four inch maximum. If the air dam covers any portion of the **stock** grille, an opening must be created in the air dam. The width of the opening must be equal to or greater than the widest horizontal measurement of the portion of the grille that would otherwise be covered. The height of the opening must be equal to or greater than the distance measured perpendicularly to the ground, between the lowest and highest point of the portion of the grille that would otherwise be covered. The opening in the air dam must be symmetrically aligned in both planes to the grille. Openings in the air dam are permitted for the purpose of ducting air to the brakes, radiator, and/or oil coolers. Openings can be cut in the front **valance** to allow the passage of up to a three inch duct or a rectangular or square duct with a maximum area of seven square inches leading to each front brake. These openings can serve no other purpose. When bumpers are used or when they are part of the bodywork, the air dam and bumper/replica bumper must appear to be two (2) separate **components**. The air dam can have no support or reinforcement extending aft of the forward most part of the front fender opening (cutout).

10. Glass and/or plastic headlight, front parking and **signal light** lenses and **bulbs** can be **removed**. All other lighting **components** can be **removed**. The headlight **bezels/rims** must remain in their **stock** locations. If the headlights are **removed**, openings behind the headlight **bezels/rims** must be covered with wire mesh screens or solid panels. These covers must be of the same or flatter contour as the **stock** headlight lenses.

A. Retractable or “pop up” headlight assemblies can be run in their open, partially opened, closed position or **removed** in their entirety. The openings created by the **removal** of the assembly must be covered with screens or panels. These covers must be the same or flatter contour as the **stock** assembly in its closed position, but need not retain any **bezels/rims**.

B. The openings created by the **removal** of front lighting **components**/assemblies, can be used to **duct** air to the **engine**, **radiator**, oil cooler(s), and front brakes. Holes for the **ducting** no larger than 7.25” in diameter can be

cut in interior panels provided the holes are completely filled by the **ducts**.

C. **Side marker light** assemblies can be **removed** and the openings covered with a solid panel.

D. Cars that have plastic or glass **headlight covers** fitted as **stock**, must **remove** those covers and either replace them with duplicates of an alternate material mounted in the **stock** location or the covers can be **removed** to allow the **ducting** of air.

E. **Taillights** must be the **stock** type and mounted in the **stock** location.

11. Open cars must **remove** convertible, removable **tops** and all attaching bracketry and **fasteners**.

12. **Windshield** wiper **system** can be modified, **substituted** or **removed**. Holes created in the **body** by the **removal** of these **components** can be covered.

13. Radio antennas can be **removed**. Holes created in the **body** by the **removal** of the antenna can be covered.

14. Heater plenums that do not serve as a major part of the structure of the **firewall** can be **removed** or modified. Any resulting holes must be covered with **metal** panels.

15. Non-**metal floor pans** can be replaced with **metal floor pans** of a minimum .060" thickness. The **metal floor pan** must have the same overall dimensions and be mounted in the same location as the **stock component**.

10. Driver/Passenger/Trunk Compartment Level 1 and 2

a. The driver's seat must be replaced with a one-piece racing seat. The driver's seat must be installed so that a second seat of the same dimensions could be simultaneously fitted to the passenger's side of the car (no center seating). All cars registered after July 1, 1985 must have the driver seated on the left when the car is viewed from the rear.

b. The **instrument panel/dashboard** and all contents are unrestricted. **Gauges/Instruments** are unrestricted.

c. **Modifications** can be made to the Driver/Passenger/**Trunk** compartment to permit the installation of required safety equipment and to improve driver comfort and driver control of the car. Covers for all equipment located in the driver/passenger compartment forward of the rear most portion of the door opening can not extend higher than six inches below the highest point of the door. The installation of a **dry sump** tank and cover that extends above six inches below the highest point of the door is permitted but the tank and cover must be located completely within 18" of the front or rear cowl and no higher than the cowl.

d. All interior **trim**, floor covering, upholstery panels and **stock** seats can be **removed**.

11. Safety Level 1 and 2

a. The use of a fuel cell is required unless the **stock** fuel tank is located between the axle centerlines and within the main chassis structure (e.g. frame rails). When the **stock** fuel tank is retained, it must be installed in its **stock** location, **additional**

retention straps and other protection can be mandated on a car-by-car basis. Fuel cell mounting, location and fuel cell or **stock** fuel tank filler cap and vents, must meet the **specifications** of the GCR section 9.3 Fuel Cell Specifications.

12. General preparation Level 1 and 2

a. **Fastener** items can be replaced by similar items performing the same fastening function(s).

b. Any paint scheme or markings meeting GCR **specifications** are permitted.

c. Two way radios are permitted. A hole can be created in the body to mount a radio antenna.

d. Fluids and Lubricants are unrestricted.

Notes:

EP	Prep. Level	Weight (lbs)	Engine Type	Bore x Stroke mm/(in.)	Displ. cc/ (ci) *(nominal)*	Block Mat'l	Head/PN & Mat'l	Valves IN & EX mm/ (in.)	Carb. No. & Type	Wheel-base mm/(in.)	Track (F/R) mm/(in.)
Acura Integra (86-89)	2	2040 *2091 **2142	4 Cyl DOHC	75.0 x 90.0 (2.95x3.54)	1590 (97.0)	Alum	Alum	(I) 30.0/(1.18) (E) 27.0/(1.06)	(2) Auto-type sidedraft w/ 32mm choke(s) on I.R. manifold, or fuel injection.	2451 (96.5)	1489/1504 (58.6/59.2)
Acura Integra GSR (94-00)	2	2090 * 2142 ** 2195	4 Cyl DOHC	81.1 x 87.2 (3.19x3.43)	1800 (109.8)	Alum	Alum	(I) 33.0/(1.30) (E) 28.0/(1.10)	Fuel injection	2570 (101.2)	62.3 / 62.1
Acura Integra Type-R (97-00)	2	2165 * 2219 ** 2273	4 Cyl DOHC	81.0 x 87.2	1797	Alum	Alum	(I) 33.0 (E) 28.0	Fuel injection	101.2	62.3 / 62.1
Alfa Romeo Alfetta GT (75-79)	1	1950	4 Cyl DOHC	84.0 x 88.5 (3.31x3.48)	1961 (119.6)	Alum	Alum	(I) 44.15/(1.74) (E)40.15/(1.58)	(2) Auto-type sidedraft w/ 44mm choke(s) on I.R. manifold, or fuel injection.	2413 (95.0)	1445/1440 (56.9/56.7)
Alfa Romeo GTV 2000	1	1950	4 Cyl DOHC	84.0 x 88.5 (3.31x3.48)	1961 (119.6)	Alum	Alum	(I) 44.15/(1.74) (E)40.15/(1.58)	(2) 40, 45, 48 DCOE, 40 DHLA, 48 DHLA. 44mm choke(s) req'd, or fuel injection.	2350 (92.5)	1415/1377 (55.7/54.2)
Alfa Romeo GTV-6 (81-86)	2	2300 * 2358 ** 2415	V-6 SOHC	88.0 x 68.3 (3.46x2.69)	2492 (152.0)	Alum	Alum	(I) 41.0/(1.61) (E) 36.5/(1.44)	Fuel injection	2401 (94.5)	1466/1443 (57.7/56.8)
Alfa Romeo all Spider models (-1994)	1	1950	4 Cyl DOHC	84.0 x 88.5 (3.31x3.48)	1961 (119.6)	Alum	Alum	(I) 44.15/(1.74) (E)40.15/(1.58)	(2) 40, 45, 48 DCOE, 40 DHLA, 48 DHLA. 44mm choke(s) req'd, or fuel injection.	2250 (88.6)	1430/1377 (56.3/54.2)
Alfa Romeo Spider Duetto & 1750 Spider (thru 1971)	1	1870	4 Cyl DOHC	78.0 x 82.0 (3.07x3.23) 80.0 x 88.4 (3.15x3.48)	1570 (96.0) 1779 (108.5)	Alum	Alum	(I) 41.1 / (1.62) (E) 37.1/(1.46)	(2) Weber 40 DCOE 27, (2) Weber 40 DCOE 32, (2) Weber 45 DCOE w/ 42mm choke(s), (2) Zenith 75 CDSE, or (3) 2" SU.	2250 (88.6)	1415/1359 (55.7/53.5)
Austin-Healey 3000 Mk. I, II, III	1	2340	6 Cyl OHV	83.3 x 88.9 (3.28x3.50)	2912 (177.6)	Iron	Iron	(I) 44.5 / (1.75) (E) 39.6/(1.56)	(2) 1.75" SU or Stromberg or (3) 1.75" or 2" SU or Stromberg on stock 3-carb intake manifold	2329 (91.7)	1359/1384 (53.5/54.5)
BMW 2002 / 2002tii	1	2000	4 Cyl SOHC	89.0 x 80.0 (3.50x3.15)	1990 (121.5)	Iron	Alum	(I) 46.0 / (1.81) (E) 38.0/(1.50)	(1) 40 DCN, DCNF, IDF w/ 36mm choke(s), (2) Auto-type sidedraft w/ 38mm choke(s) on I.R. manifold, or fuel injection.	2499 (98.4)	1430/1430 (56.3/56.3)
BMW 318i & 320i	1	2000	4 Cyl SOHC	89.0 x 80.0 (3.50x3.15)	1990 (121.5)	Iron	Alum	(I) 46.0 / (1.81) (E) 38.0/(1.50)	(1) 40 DCN, DCNF, IDF w/ 36mm choke(s), (2) Auto-type sidedraft w/ 38mm choke(s) on I.R. manifold, or fuel injection.	2563 (100.9)	1481/1494 (58.3/58.8)
BMW Z3 1.9L	2	2000 * 2050 ** 2100	4 Cyl DOHC	85.1 x 83.6 (3.35x3.29)	1895 (115.6)	Iron	Alum	(I) 33.0 /(1.30) (E) 30.5/(1.20)	(2) Auto-type sidedrafts w/ 30mm choke(s), or fuel injection.	2446 (96.3)	1481/1565 (58.3/61.6)

EP	Wheels (max)	Trans. Speeds	Brakes Std. (mm/(in.))	Brakes Alt.: mm/(in.)	Notes:
Acura Integra (86-89)	15 x 7	5	(F) 242 / (9.53) Disc (R) 239 / (9.41) Disc		Comp Ratio limited to 12.0:1. Valve lift (measured as raced - w/ lash): .500" max. Level 1 dry sump, connecting rods, intake manifold porting, crankshaft, rocker arms and cam followers.
Acura Integra GSR (94-00)	15 x 7	5	Factory spec @ all 4 wheels.		Comp ratio limited to 12.0:1, Valve lift limited to .500".
Acura Integra Type-R (97-00)	15 x 7	5	(F) 286 Vented Disc (R) 260 Solid Disc		Comp ratio limited to 10.5:1, Valve lift limited to .450".
Alfa Romeo Alfetta GT (75-79)	15 x 7	5	(F) 272 (10.7) Disc (R) 267 (10.5) Disc	(F) Alfa GTV-6 front calipers, Brembo aluminum (R) Alfa Spider rear calipers, ATE cast iron	
Alfa Romeo GTV 2000	15 x 7	5	(F) 272 (10.7) Disc (R) 267 (10.5) Disc		
Alfa Romeo GTV-6 (81-86)	15 x 7	5	Factory spec @ all 4 wheels.		*Comp Ratio limited to 12.0:1. Valve lift (measured as raced - w/ lash): .500" max. Level 1 dry sump, connecting rods, intake manifold porting, crankshaft, rocker arms and cam followers.*
Alfa Romeo all Spider models (-1994)	15 x 7	5	(F) 272 (10.7) Disc (R) 267 (10.5) Disc	(F) 272 (10.7) Disc (R) 267 (10.5) Disc Front Discs: #105802205232 Rear Discs: #105802205333	Niki Lauda Edition rear spoiler
Alfa Romeo Spider Duetto & 1750 Spider (thru 1971)	15 x 7	5	(F) 264 (10.4) Disc (R) 246 (9.7) Disc	(F & R) 264 (10.4) Disc (F) 272 (10.7) Disc (R) 267 (10.5) Disc	Niki Lauda Edition rear spoiler
Austin-Healey 3000 Mk. I, II, III	15 x 7	4	(F) 286 (11.3) Disc (R) 279 (11.0) Drum	Rear Disc: #H82462	Laycock overdrive: .88, .82, .79, May use 5 speed gearbox w/o overdrive.
BMW 2002/ 2002tii	15 x 7	4	(F) 256 (10.1) Disc (R) 230 x 40 (9.1 x 1.6) Drum	(F) 256 x 22 Disc, calipers: 34111101859, 34111101860	
BMW 318*i/is* & 320*i/is*	15 x 7	4 or 5	(F) 254 (10.0) Disc (R) 249 x 41 (9.8 x 1.6) Drum		Trunk mounted fuel cell allowed, 1800cc engine from 318i allowed
BMW Z3 1.9L	15 x 7	5	(F) 286 (11.3) Disc (R) 280 (11.0) Disc		Comp Ratio limited to 12.0:1. Valve lift (measured as raced - w/ lash): .500" max.Level 1 dry sump, connecting rods, intake manifold porting, crankshaft, rocker arms and cam followers.

EP	Prep. Level	Weight (lbs)	Engine Type	Bore x Stroke mm/(in.)	Displ. cc/ (ci) *(nominal)*	Block Mat'l	Head/PN & Mat'l	Valves IN & EX mm/ (in.)	Carb. No. & Type	Wheel-base mm/(in.)	Track (F/R) mm/(in.)
BMW Z3 2.8L (97-00)	2	2650 * 2716 ** 2783	6 Cyl DOHC	84.0 x 84.0	2793	Alum or Iron	Alum	(I) 33.0 (E) 30.5	Fuel Injection	96.3	59.8 / 60.5
BMW 328i/is E36 (96-99)	*2*	*2725 * 2793 ** 2861*	*6 Cyl DOHC*	*84.0 x 84.0*	*2793*	*Alum or Iron*	*Alum*	*(I) 33.0 (E) 30.5*	*Fuel Injection*	*106.3*	*59.6/60.1*
BMW 325i/is (E30) (84-91) (excl. conv.)	2	2200 * 2255 ** 2310	6 Cyl SOHC	84.1 x 75.0 (3.31x2.95)	2494 (152.1)	Iron	Alum	(I) 41.9 / (1.65) (E) 36.1/(1.42)	Fuel injection	2565 (101.0)	1499/1506 (59.0/59.3)
BMW 318*i/is* (1991)	2	2050 * 2101 ** 2153	4 Cyl DOHC	84.1 x 81.0	1796	Iron	Alum	(I) 33.0 / (1.30) (E) 30.5/(1.20)	Fuel injection	2570	1499/1506
BMW 318*i/ is* E36 (92-95)	2	2100 * 2153 ** 2205	4 Cyl DOHC	84.1 x 81.0	1796	Iron	Alum	(I) 33.0 (E) 30.5	Fuel injection	2700	1513/1518
Chevrolet Cavalier 2.0 (82-87)	1	2050	4 Cyl OHV	89.0 x 80.0 (3.50x3.15)	1990 (121.5)	Iron	Alum	(I) 43.0 / (1.69) (E) 37.0/(1.46)	(2) Auto-type sidedraft w/ 32mm choke(s) on I.R. manifold, or fuel injection.	2570 (101.2)	1407/1402 (55.4/55.2)
Chevrolet Corvair Coupe (65-69)	1	2200	6 Cyl OHV	87.4 x 74.7 (3.44x2.94)	2689 (164.0)	Alum	Alum	(I) 43.7 / (1.72) (E) 34.5/(1.36)	(4) 1 bbl 1.5" Rochester 7025023 or 7026026 on stock manifold, (2) 3 bbl carbs on I.R. manifold. 34mm choke(s) req'd. Holley 390 CFM w/ center mount, I.R. manifold.	2743 (108.0)	1516/1572 (59.7/61.9)
Dodge Neon (95-99)	2	2000 * 2050 ** 2100	4 Cyl DOHC	87.5 x 83.0	1995	Iron	Alum	(I) 34.8 (E) 30.5	Fuel injection	104	61.5 / 61.5
Dodge Neon (95-99)	2	2000 * 2050 ** 2100	4 Cyl SOHC	87.5 x 83.0	1995	Iron	Alum	(I) 33.0 (E) 28.0	Fuel injection	104	61.5 / 61.5
Dodge Neon ACR (01-02)	2	2000 * 2050 ** 2100	4 Cyl SOHC	87.5 x 83.0	1995	Iron	Alum	(I) 33.3 (E) 28.7	Fuel Injection	2667	62.3 / 62.4

EP	Wheels (max)	Trans. Speeds	Brakes Std. (mm/(in.))	Brakes Alt.: mm/(in.)	Notes:
BMW Z3 2.8L (97-00)	*18 x 8*	5	(F) 286 Vented Disc (R) 272 Solid Disc		Comp. Ratio limited to 12.0:1, Valve lift limited to .500". OEM hardtop allowed.
BMW 328i E36 (96-99)	*18 x 8*	*5*	*(F) 286 vented (R) 280 solid*		*Comp. Ratio limited to 12.0:1, Valve lift limited to .500".*
BMW 325i/is (E30) (84-91) (excl. conv.)	15 x 7	5	Factory spec @ all 4 wheels.		Comp. Ratio limited to 12.0:1, Valve lift limited to .500". Trunk mounted fuel cell allowed.
BMW 318*i/is* (1991)	15 x 7	5	Factory spec @ all 4 wheels.		Comp. Ratio limited to 11.0:1, Valve lift limited to .500". Trunk mounted fuel cell allowed.
BMW 318*i/is* E36 (92-95)	15 x 7	5	(F) 286 Vented Disc (R) 272 Solid Disc		Comp. Ratio limited to 11.0:1, Valve lift limited to .500". Trunk mounted fuel cell allowed.
Chevrolet Cavalier 2.0 (82-87)	13 x 7	5	(F) 247 Disc (R) 200 x 45 Drum		
Chevrolet Corvair Coupe (65-69)	15 x 7	4	(F&R)241 (9.5) Drum	(F&R) 270 x 26 Vented Disc Calipers shall be ferrous or aluminum and shall be limited to (1) piston per side.	Yenko Stinger rear quarter windows, rear decklid, and trunk flaps are permitted. Cylinder barrels of alternate material are permitted.
Dodge Neon (95-99)	15 x 7	5	(F) 257 Vented Disc (R) 257 Solid Disc		Comp. Ratio limited to 12.0:1, Valve lift limited to .500".
Dodge Neon (95-99)	15 x 7	5	(F) 257 Vented Disc (R) 257 Solid Disc		Comp. Ratio limited to 12.0:1, Valve lift limited to .500".
Dodge Neon ACR (01-02)	15 x 7	5	(F) 257 Vented Disc (R) 270 Solid Disc		Comp. Ratio limited to 12.0:1, Valve lift limited to .500".

EP	Prep. Level	Weight (lbs)	Engine Type	Bore x Stroke mm/(in.)	Displ. cc/ (ci) *(nominal)*	Block Mat'l	Head/PN & Mat'l	Valves IN & EX mm/ (in.)	Carb. No. & Type	Wheel-base mm/(in.)	Track (F/R) mm/(in.)
Dodge Omni GLH 2.2	1	2050	4 Cyl SOHC	87.5 x 92.0 (3.44x3.62)	2213 (135.0)	Iron	Alum	(I) 40.6 / (1.60) (E) 35.4/(1.39)	(1) 40 DCN, DCNF, IDF w/ 34mm choke(s), (2) Auto-type sidedraft w/ 32mm choke(s) on I.R. manifold, or fuel injection.	2517 (99.1)	1560/1549 (61.4/61.0)
Dodge Shelby Charger / Omni 024 (83-84)	1	2000	4 Cyl SOHC	87.5 x 92.0 (3.44x3.62)	2213 (135.0)	Iron	Alum	(I) 40.6 / (1.60) (E) 35.4/(1.39)	(2) Auto-type sidedraft w/ 30mm choke(s) on I.R. manifold, or fuel injection.	2451 (96.5)	1486/1473 (58.5/58.0)
Elva Courier Mk I, II, & III 1622 & 1798	1	1622cc: 1530 1798cc: 1630	4 Cyl OHV	76.2 x 88.9 80.3 x 88.9	1622 1798	Iron	Iron	(I) 39.9 (E) 34.3	(2) 1.75" SU or Stromberg	2286	53.5 / 54.6
Elva Courier Mk III, IV 1800 & Mk IV R&C	1	1630	4 Cyl OHV	80.3 x 88.9	1798	Iron	Iron	(I) 39.9 (E) 34.3	(2) 1.75" SU or Stromberg	2286	53.5 / 54.6
Fiat 124 Sport Spider 1600 & 124 Spider 2000	1	2050	4 Cyl DOHC	80.0 x 80.0 (3.15x3.15) 84.1 x 89.9 (3.31x3.54)	1608 (98.1) 1995 (121.7)	Iron	Alum	(I) 41.7 / (1.64) (E) 36.6/(1.44)	(2) Weber 40 IDF-40IFI, (2) Solex C40P116, 34mm choke(s) req'd, or fuel injection.	2281 (89.8)	1440/1407 (56.7/55.4)
Ford Escort 1.9 (85-87)	1	1870	4 Cyl SOHC	82.0 x 88.0 (3.23x3.46)	1859 (113.4)	Iron	Alum	(I) 42.0 / (1.65) (E) 37.0/(1.46)	(2) Auto-type sidedraft w/ 32mm choke(s) on I.R. manifold, or fuel injection.	2393 (94.2)	1455/1488 (57.3/58.6)
Ford Mustang 2.3 (79-93)	2	2100 * 2153 ** 2205	4 Cyl SOHC	96.0 x 79.4	2301	Iron	Iron	(I) 44.1 (E) 38.1	(1) Holley-Weber 5200 or fuel injection.	2550 (100.4)	60.8 / 61.2
Ford Pinto	1	2190	4 Cyl SOHC	96.0 x 79.4 (3.78x3.13)	2301 (140.4)	Iron	Iron	(I) 44.1 / (1.74) (E) 38.1/(1.50)	(1) 40 DCN, DCNF, IDF w/ 36mm choke(s), (2) Auto-type sidedraft w/ 32 mm choke(s) on I.R. manifold.	2388 (94.0)	1488/1509 (58.6/59.4)
Ford Probe (93-97)	2	2000 * 2050 ** 2100	4 Cyl DOHC	83.0 x 92.0	1991	Iron	Alum	(I) 31.5 (E) 27.6	Fuel injection	2614	64.1 / 64.1
Honda Civic Del Sol Si (93-94)	2	1950 *1999 **2048	4 Cyl SOHC	75.0 x 90.0 (2.95x3.54)	Alum	Alum		(I) 30.0 / (1.18) (E) 26.0/(1.02)	Fuel injection	2370 (93.3)	1567/1557 (61.7/61.3)
Honda Civic Si (99-00)	2	1950 *1999 **2048	4 Cyl DOHC	81.0 x 77.4 (3.19x3.05)	1595	Alum	Alum	(I) 33.0 / (1.30) (E) 28.0 /(1.10)	Fuel injection	2370 (93.3)	1567/1557 (61.7/61.3)

EP	Wheels (max)	Trans. Speeds	Brakes Std. (mm/(in.))	Brakes Alt.: mm/(in.)	Notes:
Dodge Omni GLH 2.2	15 x 7	5	(F) 256 (10.1) Disc (R) 200 x 33 (7.9 x 1.3) Drum		
Dodge Shelby Charger / Omni 024 (83-84)	15 x 7	5	(F) 256 (10.1) Disc (R) 200 x 33 Drum		
Elva Courier Mk I, II, & III 1622 & 1798	*15 x 7*	4	(F) 229 Drum (R) 203 Drum	(F) 229 Disc (R) 254 Drum (w/ MGA axle) (F) 279 Disc (R) Mk. 4T 229	ATB 7224 MGA axle housing assy. Only the Mk III 1622cc is allowed to update to the 1798cc engine including the 15" wheel. A Mk III making this update may also use the 13" wheels.
Elva Courier Mk III, IV 1800 & Mk IV R&C	*15 x 7*	4	(F) 229 Drum (R) 203 Drum	(F) 229 Disc (R) 254 Drum (w/ MGA axle) (F) 279 Disc (R) Mk. 4T 229	Mk IV T R&C have IRS, Mk III & IV 1800 have live axle. ATB 7224 MGA axle housing assy.
Fiat 124 Sport Spider 1600 & 124 Spider 2000	15 x 7	5	(F) 226 (8.9) Disc (R) 226 (8.9) Disc	(F & R) 254 (10.0) Disc Alternate rotor: # 82346805	Intake manifold: #124A20079-3, Allow alternate PBS intake manifold.
Ford Escort 1.9 (85-87)	15 x 7	4 or 5	(F) 235 (9.3) Disc (R) 180 (7.1) Drum		
Ford Mustang 2.3 (79-93)	15 x 7	4 or 5	(F) 256 Vented Disc (R) 229 Drum		Comp. Ratio limited to 12.0:1, Valve lift limited to .500".
Ford Pinto	15 x 7	4 or 5	(F) 236 (9.3) Disc (R) 229 x 36 (9.0x 1.4) Drum		
Ford Probe (93-97)	15 x 7	5	(F) 258 Vented Disc (R) 228 Drum		Comp. Ratio limited to 12.0:1, Valve lift limited to .500".
Honda Civic Del Sol Si (93-94)	15 x 7	5	Factory spec @ all 4 wheels.		Comp. Ratio limited to 12.5:1, Valve lift limited to .500".
Honda Civic Si (99-00)	15 x 7	5	(F) 240 (9.4) Disc (R) 239 (9.4) Disc		Comp. Ratio limited to 12.0:1, Valve lift limited to .500".

EP	Prep. Level	Weight (lbs)	Engine Type	Bore x Stroke mm/(in.)	Displ. cc/ (ci) *(nominal)*	Block Mat'l	Head/PN & Mat'l	Valves IN & EX mm/ (in.)	Carb. No. & Type	Wheel-base mm/(in.)	Track (F/R) mm/(in.)
Honda S2000 (00-03)	2	2520 * 2583 ** 2646	4 Cyl DOHC	87.0 x 84.0	1997	Alum	Alum	(I) 36.0 (E) 31.0	Fuel Injection	94.5	62.1 / 63.7
Honda S2000 (04-*09*)	2	2580 * 2645 ** 2709	4 Cyl DOHC	87.0 x 90.7	2157	Alum	Alum	(I) 36.1 (E) 31.1	Fuel Injection	94.5	62.1 / 63.7
Honda Prelude Si	2	*2370* ** 2430* *** 2489*	4 Cyl DOHC	87.0 x 95.0 (3.43x3.74)	2259 (137.8)	Alum	Alum	(I) 34.0 / (1.34) (E) 29.0/(1.14)	(2) Auto-type sidedraft w/ 32mm choke(s) on I.R. manifold, or fuel injection.	2550 (100.4)	1615/1605 (63.6/63.2)
Honda Prelude Si VTEC (1993)	2	2730 * 2798 ** 2867	4 Cyl DOHC	87.0 x 90.0	2157	Alum	Alum	(I) 35.0 / (1.38) (E) 30.0/(1.18)	Fuel injection	2550 (100.4)	1632/1622
Hyundai Tiburon FX 2.0L (97-98)	2	2000 * 2050 ** 2100	4 Cyl DOHC	82.0 x 93.5 (3.23x3.68)	1975	Alum	Alum		Fuel injection	2474 (97.4)	1466/1450 (57.7/57.1)
Jensen-Healey and GT	1	2090	4 Cyl DOHC	85.3 x 69.3 (3.75x2.73)	1973 (120.4)	Alum	Alum	(I) 35.6 / (1.40) (E) 30.5/(1.22)	(2) Weber 45 DCOE on I.R. Manifold w/ 34mm choke(s)	2337 (92.0)	1448/1422 (57.0/56.0)
Lotus / Caterham 7 America	2	1460	4 Cyl DOHC (Ford ZETEC)	84.8 x 88.0 (3.34x3.46)	1989 (121.3)	Iron	Alum		IT fuel injection prep	2235 (88.0)	1336/1349 (52.6/53.1)
Lotus Elise	2	2250 *2306 **2363	4 Cyl DOHC	82.0 x 85.0	1796	Alum	Alum	(I)36.1 (E)31.1	fuel injection	94.5	62.1/63.7
Mazda MX-5 / Miata 1.6L (-1993)	1	2175	4 Cyl DOHC	78.0 x 83.6 (3.07x3.29)	1597 (97.4)	Iron	Alum	(I) 31.1 / (1.22) (E) 26.3/(1.04)	(1) 40mm Auto-type sidedraft w/ 30mm choke(s), (2) Auto-type sidedraft w/ 32mm choke(s) on I.R. manifold, or fuel injection.	2266 (89.2)	1478/1491 (58.2/58.7)

EP	Wheels (max)	Trans. Speeds	Brakes Std. (mm/(in.))	Brakes Alt.: mm/(in.)	Notes:
Honda S2000 (00-03)	*17 x 8.5* 18 x 8	6	(F) 300 Vented Disc (R) 282 Solid Disc		Comp. Ratio limited to 12.0:1, Valve lift limited to .500". OEM hardtop allowed. *OEM or aftermarket rear wing is not permitted.*
Honda S2000 (04-*09*)	17 x 8.5 18 x 8	6	(F) 300 Vented Disc (R) 282 Solid Disc		Comp. Ratio limited to 12.0:1, Valve lift limited to .500". OEM hardtop allowed.
Honda Prelude Si	15 x 7	5	(F&R) 259 (10.2) Disc		Comp Ratio limited to 12.0:1. Valve lift (measured as raced - w/ lash): .500" max. Level 1 dry sump, connecting rods, intake manifold porting, crankshaft, rocker arms and cam followers. *OEM or aftermarket rear wing is not permitted.*
Honda Prelude Si VTEC (1993)	15 x 7	5	Factory spec @ all 4 wheels.		Comp. Ratio limited to 10.0:1, Valve lift limited to .300".
Hyundai Tiburon FX 2.0L (97-98)	15 x 6	5	(F) 257 (10.1) Disc (R) 203 (8.0) Drum		Comp. Ratio limited to 10.5:1., Valve lift limited to .450".
Jensen-Healey and GT	15 x 7	4 or 5	(F) 254 (10.0) Disc (R) 229 (9.0) Drum	(F) 257 (10.1) Disc (R) 229 (9.0) Drum (F) 267 (10.5) Vented Disc (R) 267 x 20 Disc from TR-8	Toyota rear differential w / 8" ring gear (4WD rear)
Lotus / Caterham 7 America	13 x 6	5	(F&R) 229 (9.0) Disc		Level 2 suspension preparation. Engine is limited to IT preparation except modifications permitted in section 9.1.5.E.2.e and f. Comp. Ratio limited to 10.0: 1, Valve lift limited to .380". Stock transmission with helical gears req'd. Gear ratios: 3.36, 1.81, 1.26, 1.00, 0.82, The rollcage may be modified or replaced. The rollcage must have a full-width, high front & rear hoop, using the OEM cage mounting points. The side intrusion bars shall remain outside the passenger compartment. The Caterham "clamshell" front fender is required. Front fenders shall be mounted in the normal position as provided from the factory. Front fenders may be modified as described here. The fender mounting flange shall be a minimum of 36" in length. At the rear of the fender, the lower edge of the mounting flange shall extend no higher than 8-1/2" above the undertray of the vehicle. At its maximum width, the fender shall be no narrower that 20-1/2" as measured along the upper curvature. At a point 18" rearward from the front of the flange, the fender shall be no narrower than 7" along the upper curvature and at 34" the fender shall be no less than 3" along the upper curvature. From 34" rearward, a radius may provide a transition between the outer and the rearmost fender edges. The contours resulting from this modification shall be gradual and describe a smooth curve in plan view. No further modifications are allowed.
Lotus Elise	16 x 7	6	(F)288 Vented Disc (R)288 Vented Disc		Comp. Ratio limited to 12.0:1, Valve lift limited to .500".
Mazda MX-5 / Miata 1.6L (-1993)	15 x 7 18 x 8	5	(F) 235 (9.3) Vented Disc (R) 231 (9.1) Soli Disc	(F) 254 (10.0) Vented Disc (R) 251 (9.9) Solid Disc	"Dual Y" manifold required w / single DCOE carb., no plenum or balance tubes. 1994 Mazda Miata (1840cc) differential housing is permitted. OEM hardtop allowed.

EP	Prep. Level	Weight (lbs)	Engine Type	Bore x Stroke mm/(in.)	Displ. cc/ (ci) *(nominal)*	Block Mat'l	Head/PN & Mat'l	Valves IN & EX mm/ (in.)	Carb. No. & Type	Wheel-base mm/(in.)	Track (F/R) mm/(in.)
Mazda MX-5 / Miata 1.8L (90-97)	1/2 See Notes	Carb: 2175 F.I.: 2225	4 Cyl DOHC	83.0 x 85.0 (3.27x3.35)	1840 (112.2)	Iron	Alum	(I) 33.1 / (1.30) (E) 28.2/(1.11)	(2) Auto-type sidedraft w/ 32mm choke(s) on I.R. manifold, or fuel injection.	2266 (89.2)	1483/1509 (58.4/59.4)
Mazda MX-5 / Miata (94-97)	2	2050 * 2101 ** 2153	4 Cyl DOHC	83.0 x 85.0	1840	Iron	Alum	(I) 33.1 (E) 28.2	Fuel injection	2266	58.4 / 59.4
Mazda MX-5 / Miata (99-02)	2	2075 * 2127 ** 2179	4 Cyl DOHC	83.0 x 85.0 (3.27x3.35)	1840 (112.2)	Iron	Alum	(I) 33.1 / (1.30) (E) 28.2/(1.11)	(1) 40mm Auto-type sidedraft w/ 30mm choke(s), (2) Auto-type sidedraft w/ 28mm choke(s) on I.R. manifold, or fuel injection.	2266 (89.2)	1483/1509 (58.4/59.4)
Mazda MX-5 (06-09)	2	2450 * 2511 ** 2573	4 Cyl DOHC	87.38 x 83.06	1999	Alum	Alum	(I) 35.1 (E) 30.0	Fuel Injection	2329	63.0 / 63.2
Mazda Protégé ES (01-03)	2	2000 * 2050 ** 2100	4 Cyl DOHC	83.0 x 92.0	1991	Iron	Alum	(I) 31.5 (E) 27.6	Fuel injection	102.8	60.8 / 61.0
Mazda RX-2	2	1950 * 1999 ** 2048	Rotary	12A	2292 (139.8)				(1) Nikki 4 bbl carburetor w/ primary choke(s) bored to match secondary choke(s) on a stock manifold or (1) Auto-type 2 bbl w/ *40mm* choke(s) on a "dual-y" manifold"		
Mazda RX-3 & 3SP (72-78)	2	1950 * 1999 ** 2048	Rotary	12A	2292 (139.8)				(1) Nikki 4 bbl carburetor w/ primary choke(s) bored to match secondary choke(s) on a stock manifold or (1) Auto-type 2 bbl w/ *40mm* choke(s) on a "dual-y" manifold"	2311 (91.0)	1410/1410 (55.5/55.5)
Mazda RX-4 (74-78)	2	2100 * 2153 ** 2205	Rotary	13B 6-port	2616				(1) Nikki 4 bbl carburetor w/ primary choke(s) bored to match secondary choke(s) on a stock manifold or (1) Auto-type 2 bbl w/ 38mm choke(s) on a "dual-y" manifold"	99.0	60.0 / 59.0
Mazda RX-7 (12A / 13B) (79-85)	2	12A: 2100 * 2153 ** 2205 13B: 2190 * 2245 ** 2300	Rotary	12A 13B (84-85 6-port only)	2292 (139.8) 2616 (159.6)				12A: (1) Nikki 4 bbl carburetor w/ primary choke(s) bored to match secondary choke(s) on a stock manifold or (1) Auto-type 2 bbl w/*40m*m choke(s) on a "dual-y" manifold. 13B: (1) Auto-type 2 bbl w/ 38mm choke(s) on a "dual-y" manifold, or fuel injection.	2421 (95.3)	1524/1499 (60.0/59.0)

EP	Wheels (max)	Trans. Speeds	Brakes Std. (mm/(in.))	Brakes Alt.: mm/(in.)	Notes:
Mazda MX-5 / Miata 1.8L (90-97)	15 x 7	5	(F) 235 (9.3) Vented Disc (R) 231 (9.1) Solid Disc	(F) 254 (10.0) Vented Disc (R) 251 (9.9) Solid Disc	Comp Ratio limited to 12.0:1. Valve lift (measured as raced - w/ lash): .500" max. Drivetrain Level 2 preparation only. Listed spec line weight does not change with alternate or stock transmission. Level 1, dry sump, connecting rods, intake manifold porting, crankshafts, rocker arms and cam followers. OEM hard top allowed.
Mazda MX-5 / Miata (94-97)	15 x 7	5	(F) 235 Vented Disc (R) 231 Solid Disc	(F) 254 Vented Disc (R) 251 Solid Disc	Comp. Ratio limited to 12.0:1. Valve lift (measured as raced - w/ lash): .500" max. Level 1 dry sump, connecting rods, intake manifold porting, crankshaft, rocker arms and cam followers. OEM hardtop allowed.
Mazda MX-5 / Miata (99-02)	15 x 7	5	(F) 235 (9.3) Vented Disc (R) 231 (9.1) Solid Disc	(F) 254 (10.0) Vented Disc (R) 251 (9.9) Solid Disc	Comp Ratio limited to 12.0:1. Valve lift (measured as raced - w/ lash): .500" max. Level 1 dry sump, connecting rods, intake manifold porting, crankshaft, rocker arms and cam followers. OEM hardtop allowed. Variable valve timing prohibited.
Mazda MX-5 (06-09)	18 x 8	5 or 6	(F) 289.6 Vented Disc (R) 279.4 Solid Disc		Comp. Ratio limited to 12.0:1, Valve lift limited to .500". OEM hardtop allowed.
Mazda Protégé ES (01-03)	15 x 7	5	Factory spec @ all 4 wheels.		Comp. Ratio limited to 12.0:1, Valve lift limited to .500".
Mazda RX-2	15 x 7	5	(F) 231 (9.1) Disc (R) 201 (7.9) Drum	(F) 227 (8.9) Disc (F) 250 Disc (R) 229 (9.0) Drum (R) 236 Disc (R) 256 Disc	Level 1 dry sump, intake manifold porting permitted.
Mazda RX-3 & 3SP (72-78)	15 x 7	5	(F) 231 (9.1) Disc (R) 201 (7.9) Drum	(F) 227 (8.9) Disc Discs and calipers from 79-85 12A RX-7 (R) 229 (9.0) Drum (F) 250 (9.8) Disc Discs and calipers from '84-'85 RX-7 GSL-SE	Level 1 dry sump, intake manifold porting permitted. Alternate multi-piece hub and rotor allowed provided they are of the same dimensions as original and weigh a minimum of 10.2 lbs.
Mazda RX-4 (74-78)	15 X 7	5	(F) 232 Disc (R) 229 Drum	(F) 227 (8.9) Disc Discs and calipers from 79-85 12A RX-7 (F) 250 (9.8) Disc Discs and calipers from '84-'85 RX-7 GSL-SE	Level 1 dry sump, intake manifold porting permitted. Any 86-95 rotor housing permitted.
Mazda RX-7 (12A / 13B) (79-85)	15 x 7	5	(F) 227 (8.9) Disc (R) 200 (7.9) Drum	(F) 250 (9.8) Disc (R) 236 (9.3) Disc (R) 256 (10.1) Disc	Level 1 dry sump, intake manifold porting permitted. Alternate multi-piece hub and rotor allowed provided they are of the same dimensions as original and weigh a minimum of 10.2 lbs. 13B (only): Any 13B rotor housing and any 84-92 non-turbo 6-port side housing permitted.

EP	Prep. Level	Weight (lbs)	Engine Type	Bore x Stroke mm/(in.)	Displ. cc/ (ci) *(nominal)*	Block Mat'l	Head/PN & Mat'l	Valves IN & EX mm/ (in.)	Carb. No. & Type	Wheel-base mm/(in.)	Track (F/R) mm/(in.)
Mazda RX-7 (13B) (86-91)	2	2300 * 2358 ** 2415	Rotary	13B	2616 (159.6)				(1) Auto-type 2 bbl w/ 42mm choke(s) on a "dual-y" manifold, or fuel injection.	2431 (95.7)	1542/1532 (60.7/60.3)
Mazda RX-8 (04-09)	2	2450 * 2511 ** 2573	Rotary	Renesis	2701				Fuel Injection	106.4	63.2 / 63.6
MGB & MGB-GT	1	1760	4 Cyl OHV	80.3 x 88.9 (3.16x3.50)	1798 (109.7)	Iron	Iron	(I) 39.9 / (1.57) (I) 41.4 / (1.63) (E) 34.3/(1.35)	(2) 1.5" SU HS-4, (2) 2" SU or Stromberg, (2) 1.75" SU	2311 (91.0)	1346/1351 (53.0/53.2)
Mercedes-Benz 190E 2.3L (8-valve) (84-93)	2	2100 * 2153 ** 2205	4 Cyl SOHC	96.5 x 80.3 (3.80x3.16)	2299 (140.2)	Iron	Alum	(I) 46.1 / (1.81) (E) 39.1/(1.54)	Fuel injection	2665 (104.9)	1529/1510 (60.2/59.4)
Mercury Capri 2.3 (79-86)	2	2100 * 2153 ** 2205	4 Cyl SOHC	96.0 x 79.4	2301	Iron	Iron	(I) 44.1 (E) 38.1	(1) Holley-Weber 5200 or fuel injection.	2550 (100.4)	60.8 / 61.2
Morgan Super Sport	1	1820	4 Cyl OHV	86.1 x 91.1	2138	Iron	Iron	(I) 39.6 (E) 33.0	(2) Weber 42 DCOE w/ 34mm choke(s)	96.0	52.0 / 52.5
Nissan/Datsun 240-Z	2	2200 * 2255 ** 2310	6 Cyl SOHC	83.0 x 73.3 (3.27x2.89)	2380 (145.2)	Iron	Alum	(I) 42.0 / (1.65) (E) 33.0/(1.30)	(2) Hitachi-SU (1bbl) 46mm throttle bores	2304 (90.7)	1445/1438 (56.9/56.6)
Nissan/Datsun 260-Z	2	2300 * 2358 ** 2415	6 Cyl SOHC	83.0 x 79.0 (3.27x3.11)	2565 (156.5)	Iron	Alum	(I) 42.0 / (1.65) (E) 35.0/(1.38)	(2) Hitachi-SU (1bbl) 46mm throttle bores	2304 (90.7)	1445/1438 (56.9/56.6)
Nissan/Datsun SRL 311U Roadster	1	2000	4 Cyl SOHC	87.1 x 83.1 (3.43x3.27)	1982 (120.9)	Iron	Alum	(I) 46.0 / (1.81) (E) 36.1/(1.42)	(2) Mikuni PHH 44mm. 38mm choke(s) req'd, (2) Hitachi-SU (1bbl) 46mm throttle bores.	2281 (89.8)	1364/1288 (53.7/50.7) (w / 6") 1389/1313 (54.7/51.7) (w / 7")
Nissan 200-SX / S10 (77-79)	1	1950	4 Cyl SOHC	85.1 x 86.1 (3.35x3.39)	1952 (119.1)	Iron	Alum	(I) 42.1 / (1.66) (E) 35.2/(1.39)	(1) 40 DCN, DCNF, IDF w/ 36mm choke(s), (2) Auto-type sidedraft w/ 30mm choke(s) on I.R. manifold.	2337 (92.0)	1453/1405 (57.2/55.3)

EP	Wheels (max)	Trans. Speeds	Brakes Std. (mm/(in.))	Brakes Alt.: mm/(in.)	Notes:
Mazda RX-7 (13B) (86-91)	15 x 7	5	(F) 250 (9.8) Disc (R) 256 (10.1) Disc	(F) 277 (10.9) Disc (R) 272 (10.7) Disc	Any 13B rotor housing and any 84-92 non-turbo 6-port side housing permitted. Level 1 dry sump, intake manifold porting permitted. OEM or aftermarket rear spoiler not permitted.
Mazda RX-8 (04-09)	18 x 8	6	(F) 323 Vented Disc (R) 303 Vented Disc		*Pro Formula Mazda throttle body measuring 70mm inside dimension allowed.*
MGB & MGB-GT	15 x 7	4	(F) 273 (10.8) Disc (R) 254 (10.0) Drum		17th 8152 (0.75") wheel cylinders, Alternate intake manifold for 2" SU: #12 H2838, Laycock overdrive, May use 5 speed gearbox w/o overdrive. Alt. Manifold: Any individual runner manifold with runner length of 3.0-4.0" measured flange to flange.
Mercedes-Benz 190E 2.3L (8-valve) (84-93)	15 x 7	5	Factory spec @ all 4 wheels.		Comp. Ratio limited to 10.5:1, Valve lift limited to .450".
Mercury Capri 2.3 (79-86)	15 x 7	4 or 5	(F) 256 Vented Disc (R) 229 Drum		Comp. Ratio limited to 12.0:1, Valve lift limited to .500".
Morgan Super Sport	13 x 7	4	(F) 11.0 Disc (R) 9.0 Drum		
Nissan/Datsun 240-Z	15 x 7	4	(F) 272 (10.7) Disc (R) 229 (9.0) Drum	(F) 252 (9.92) Vented Disc (R) 258 or 269 Solid Disc Discs and calipers from 280-ZX.	Comp Ratio limited to 12.0:1. Valve Lift (measured as raced - w/ lash): .500" max. Level 1 dry sump, connecting rods, intake manifold porting, crankshaft, rocker arms and cam followers.
Nissan/Datsun 260-Z	15 x 7	4	(F) 272 (10.7) Disc (R) 229 (9.0) Drum	(F) 252 (9.92) Vented Disc (R) 258 or 269 Solid Disc Discs and calipers from 280-ZX.	Comp Ratio limited to 12.0:1. Valve Lift (measured as raced - w/ lash): .500" max. Level 1 dry sump, connecting rods, intake manifold porting, crankshaft, rocker arms and cam followers.
Nissan/Datsun SRL 311U Roadster	15 x 7	5	(F) 285 (11.2) Disc (R) 229 (9.0) Drum	(F) 279 x 26 Vented Disc Front calipers from: 240, 260, or 280Z (1970-78) w/spacers Rotor origin is unrestricted	
Nissan 200-SX / S10 (77-79)	15 x 7	5	(F) 244 (9.6) Disc (R) 229 x 40 (9.0 x 1.6) Drum		

EP	Prep. Level	Weight (lbs)	Engine Type	Bore x Stroke mm/(in.)	Displ. cc/ (ci) *(nominal)*	Block Mat'l	Head/PN & Mat'l	Valves IN & EX mm/ (in.)	Carb. No. & Type	Wheel-base mm/(in.)	Track (F/R) mm/(in.)
Nissan 200-SX SE-R	2	2150 * 2204 ** 2258	4 Cyl DOHC	86.0 x 86.0 (3.39x3.39)	1998 (121.9)	Iron	Alum	(I) 34.2 / (1.35) (E) 30.2/(1.19)	(2) Auto-type sidedraft w/ 32mm choke(s) on I.R. manifold, or fuel injection.	2431 (95.7)	1537/1516 (60.5/59.7)
Nissan 240-SX / S13	2	2320 * 2378 ** 2436	4 Cyl SOHC (3 valve)	89.0 x 96.0 (3.50x3.78)	2389 (145.7)	Iron	Alum	(I) 34.0 / (1.34) (E) 40.0/(1.57)	(2) Auto-type w/ 30mm choke(s), or fuel injection.	2474 (97.4)	*1572/1567 (61.9/61.7)*
Nissan 240-SX S13/S14 (91-98)	2	2600 * 2665 ** 2730	4 Cyl DOHC	89.0 x 96.0	2389	Iron	Alum	(I) 38.1 (E) 31.8	Fuel injection	S13: 97.4 S14: 99.4	1587/1577
Nissan NX-2000	2	2150 * 2204 ** 2258	4 Cyl DOHC	86.0 x 86.0 (3.39x3.39)	1998 (121.9)	Iron	Alum	(I) 34.2 / (1.35) (E) 30.2/(1.19)	(2) Auto-type sidedraft w/ 32mm choke(s) on I.R. manifold, or fuel injection.	2431 (95.7)	1524/1501 (60.0/59.1)
Nissan Sentra SE-R (90-94)	2	2150 * 2204 ** 2258	4 Cyl DOHC	86.0 x 86.0 (3.39x3.39)	1998 (121.9)	Iron	Alum	(I) 34.2 / (1.35) (E) 30.2/(1.19)	(2) Auto-type sidedraft w/ 32mm choke(s) on I.R. manifold, or fuel injection.	2431 (95.7)	1524/1501 (60.0/59.1)
Nissan/Datsun HL510 (78-81)	1	1900	4 Cyl SOHC	85.1 x 86.1 (3.35x3.39)	1952 (119.1)	Iron	Alum	(I) 42.1 / (1.66) (E) 35.2/(1.39)	(1) 40 DCN, DCNF, IDF w/ 36mm choke(s), (2) Auto-type sidedraft w/ 30mm choke(s) on I.R. manifold.	2388 (94.0)	1478/1448 (58.2/57.0)
Pontiac Fiero GT & Formula (85-88)	2	2500 *2563 **2625	6 Cyl OHV	89.0 x 76.0	2837	Iron	Iron	(I) 43.7 (E) 36.3	Fuel Injection	93.4	62.0 / 63.0
Pontiac Solsitce (06-09)	2	2620 * 2686 ** 2751	4 Cyl DOHC	88.0 x 98.0	2384	Alum	Alum	(I) 32.25 (E) 30.25	Fuel Injection	95.1	65.1 / 65.8
Porsche Boxster (97-99)	*2*	*2650 * 2716 ** 2783*	*6 Cyl. DOHC*	*85.5 x 72.0*	*2480*	*Alum*	*Alum*	*(I) 33.3 (E) 28.1*	*Fuel injection*	*95.1*	*61.42 / 63.58*
Porsche 911 2.2L	1	2050	Oppos'd 6 Cyl SOHC	84.0 x 66.0 (3.31x2.60)	2195 (133.9)	Alloy	Alloy	(I) 46.1 / (1.81) (E) 40.1/(1.58)	(2) IDA-3C carburetors. 34mm choke(s) max.	2271 (89.4)	58.2 / 57.4
Porsche 914-4	1	1820	4 Cyl OHV	94.0 x 70.9 (3.70x2.79)	1968 (120.1)	Alum	Alum	(I) 41.9 / (1.65) (E) 36.1/(1.42)	(2) Solex 40 PII-4, (2) weber 40 IDF, (2) Del'Orto 40mm, 38mm choke(s) max, or fuel injection.	2451 (96.5)	1435/1478 (56.5/58.2)
Porsche 914-6 2.0L	1	1900	Oppos'd 6 Cyl SOHC	80.0 x 66.0 (3.15x2.60)	1991 (121.5)	Alloy	Alloy	(I) 41.9 / (1.65) (E) 38.1/(1.50)	(2) IDA-3C carburetors. 38mm choke(s) max.	2451 (96.5)	1452/1499 (57.2/59.0)

EP	Wheels (max)	Trans. Speeds	Brakes Std. (mm/(in.))	Brakes Alt.: mm/(in.)	Notes:
Nissan 200-SX SE-R	15 x 7	5	(F) 249 (9.8) Disc (R) 234 (9.2) Disc		Comp Ratio limited to 12.0:1. Valve lift (measured as raced - w/ lash): .500" max. Level 1 dry sump, connecting rods, intake manifold porting, crankshaft, rocker arms and cam followers.
Nissan 240-SX / S13	15 x 7	5	(F) 252 (9.9) Disc (R) 258 (10.2) Disc	(F) Stock 257 x 22 (10.1 x .87) ABS discs w/ 4-lug hub & ABS front calipers.	Comp Ratio limited to 12.0:1. Valve lift (measured as raced - w/ lash): .500" max. Level 1 dry sump, connecting rods, intake manifold porting, crankshaft, rocker arms and cam followers.
Nissan 240-SX S13/S14 (91-98)	15 x 7	5	(F) 257 Vented Disc (R) 258 Solid Disc		Comp. Ratio limited to 10.5:1, Valve lift limited to .450".
Nissan NX-2000	15 x 7	5	(F) 249 (9.8) Disc (R) 234 (9.2) Disc		Comp Ratio limited to 12.0:1. Valve lift (measured as raced - w/ lash): .500" max. Level 1 dry sump, connecting rods, intake manifold porting, crankshaft, rocker arms and cam followers.
Nissan Sentra SE-R (90-94)	15 x 7	5	(F) 249 (9.8) Disc (R) 234 (9.2) Disc		Comp Ratio limited to 12.0:1. Valve lift (measured as raced - w/ lash): .500" max. RLevel 1 dry sump, connecting rods, intake manifold porting, crankshaft, rocker arms and cam followers.
Nissan/Datsun HL510 (78-81)	15 x 7	5	(F) 244 (9.6) Disc (R) 229 x 40 (9.0 x 1.6) Drum	(F) 251 (9.9) Vented Discs Discs and calipers from 280-ZX.	
Pontiac Fiero GT & Formula (85-88)	*15 x 7*	4 or 5	(F) 260 or 247 Disc (R) 260 or 247 disc		Comp. ratio limited to 12.0:1. Valve lift limited to .500".
Pontiac Solsitce (06-09)	18 x 8	5	(F) 296 Vented Disc (R) 278 Solid Disc		Comp Ratio limited to 12.0:1. Valve lift limited to .500". GM part #PCS-0664 hardtop allowed.
Porsche Boxster (97-99)	*17 x 8.5*	*5*	*(F) 298 vented* *(R) 290 vented*		*Comp. Ratio limited to 12.0:1, Valve lift limited to .500".*
Porsche 911 2.2L	15 x 7	4 or 5	(F) 282 (11.1) Disc (R) 290 (11.4) Disc	(F&R) 300 (11.8) Disc	Cylinder barrels of alternate material are permitted.
Porsche 914-4	15 x 7	5	(F) 282 (11.1) Disc (R) 285 (11.2) Disc	Front "M" calipers permitted, 914-6 calipers & discs allowed	Standard intake manifold: Porsche part #021 129 705N. Alternate manifolds with the same length and configuration (4-5¼" center line axis) are allowed. (i.e. Pierce manifold part # 99004.822. Top panel may remain in place if securley bolted or pinned. Cylinder barrels of alternate material are permitted.
Porsche 914-6 2.0L	15 x 7	5	(F) 282 (11.1) Disc (R) 287 (11.3) Disc	(F&R) 300 (11.8) Disc	Cylinder barrels of alternate material are permitted.

EP	Prep. Level	Weight (lbs)	Engine Type	Bore x Stroke mm/(in.)	Displ. cc/ (ci) *(nominal)*	Block Mat'l	Head/PN & Mat'l	Valves IN & EX mm/ (in.)	Carb. No. & Type	Wheel-base mm/(in.)	Track (F/R) mm/(in.)
Porsche 924	1	2050	4 Cyl OHC	86.5 x 84.4 (3.41x3.32)	1984 (121.0)	Iron	Alum	(I) 40.0 / (1.57) (E) 33.0/(1.30)	(2) Auto-type w/ 30mm choke(s)	2400 (94.5)	1420/1392 (55.9/54.8)
Porsche 944/ 924S 2.5L (2V) (83-88)	2	2250 * 2306 ** 2363	4 Cyl SOHC	100.0x78.9 (3.94x3.11)	2479 (151.2)	Iron	Alum	(I) 45.0 / (1.77) (E) 40.0/(1.57)	Fuel injection	2400 (94.5)	1568/1542 (61.7/60.7)
Porsche 944S (87-88)	2	*2700 * 2768 ** 2835*	4 Cyl DOHC	100.0x78.9	2479	Iron	Alum	(I) 37.0 (E) 33.0	Fuel injection	2400	1568/1542
Saturn Sky (07-09)	2	2620 * 2686 ** 2751	4 Cyl DOHC	88.0 x 98.0	2384	Alum	Alum	(I) 32.25 (E) 30.25	Fuel Injection	95.1	65.1 / 65.8
Toyota Celica GT	*2*	*2090*	*4 Cyl DOHC*	*79 x 91.5*	*1794*	*Alum*	*Alum*	*(I) 32.0 (E) 27.5*		*102.4*	*62.9/62.5*
Toyota Celica II 2.4L (81-82) (excl. conv.)	2	2140 * 2194 ** 2247	4 Cyl SOHC	92.0 x 89.0 (3.62x3.50)	2366 (144.3)	Iron	Alum	(I) 45.0 / (1.77) (E) 37.0/(1.46)	Carburetion	2500 (98.4)	1486/1456 (58.5/57.3)
Toyota Celica 2.4L (83-85) (excl. conv.)	2	2140 * 2194 ** 2247	4 Cyl SOHC	92.0 x 89.0 (3.62x3.50)	2366 (144.3)	Iron	Alum	(I) 45.0 / (1.77) (E) 37.0/(1.46)	(2) Auto-type sidedraft w/ 36mm choke(s), or fuel injection.	2500 (98.4)	1486/1456 (58.5/57.3)
Toyota Corolla GTS (4AG) (84-89)	1	2060	4 Cyl DOHC	81.0 x 77.0 (3.19x3.03)	1587 (96.8)	Iron	Alum	(I) 30.7 / (1.21) (E) 26.0/(1.02)	(1) DCOE w/ 36mm choke(s), (2) Auto-type sidedraft w/ 36mm choke(s) on I.R. manifold, or fuel injection.	2413 (95.0)	1524/1524 (60.0/60.0)
Toyota MR-2	1	1950	4 Cyl DOHC	81.0 x 77.0 (3.19x3.03)	1587 (96.8)	Iron	Alum	(I) 30.7 / (1.21) (E) 26.0/(1.02)	(1) DCOE w/ *42mm* choke(s), (2) Auto-type sidedraft w/ *42mm* choke(s) on I.R. manifold, or fuel injection.	2319 (91.3)	1532/1532 (60.3/60.3)
Toyota MR2 ZZW30 (00-05)	*2*	*2075 * 2127 ** 2179*	*4 Cyl. DOHC*	*79.0 x 91.5*	*1794*	*Alum*	*Alum*	*(I) 32.0 (E) 27.5*	*Fuel injection*	*96.5*	*62.34 / 61.73*
Toyota Supra (82-85)	2	2500 *2562 **2625	6 Cyl OHV	83.0 x 85.0	2759			(I) 44.0 (E) 36.0		2517	

EP	Wheels (max)	Trans. Speeds	Brakes Std. (mm/(in.))	Brakes Alt.: mm/(in.)	Notes:
Porsche 924	15 x 7	5	(F) 257 (10.1) Disc (R) 231 (9.1) Drum	(F) 282 (11.1) Disc (R) 290 (11.4) Disc	
Porsche 944/ 924S 2.5L (2V) (83-88)	15 x 7	5	Factory spec @ all 4 wheels.		Comp. Ratio limited to *12.0:1*, Valve lift limited to *.500"*. Dry sump is allowed.
Porsche 944S (87-88)	15 x 7	5	(F) 282 Vented Disc (R) 289 Vented Disc		Comp. Ratio limited to *12.0:1*, Valve lift limited to *.500"*. Dry sump is allowed.
Saturn Sky (07-09)	18 x 8	5	(F) 296 Vented Disc (R) 278 Solid Disc		Comp Ratio limited to 12.0:1. Valve lift limited to .500". GM part #PCS-0664 hardtop allowed.
Toyota Celica GT	*15 x 7*	*5*	*(F) 254 Disc* *(R) 254 Drum*		*Comp Ratio limited to 12.0:1. Valve lift limited to .500".*
Toyota Celica II 2.4L (81-82) (excl. conv.)	*15 x 7*	5	Factory spec @ all 4 wheels.		Comp. Ratio limited to 10.5:1, Valve lift limited to .450".
Toyota Celica 2.4L (83-85) (excl. conv.)	15 x 7	5	Factory spec @ all 4 wheels.		Comp. Ratio limited to 10.5:1, Valve lift limited to .500".
Toyota Corolla GTS (4AG) (84-89)	15 x 7	5	(F & R) 231 (9.1) Disc		Dual Y manifold required w / single DCOE carb., no plenum or balance tubes
Toyota MR-2	15 x 7	5	(F) 244 (9.6) Disc (R) 239 (9.4) Disc	(F) 257 (10.1) Disc (R) 262 (10.3) Disc	Trunk mounted fuel cell allowed. Can use stock fuel tank. "Dual Y" manifold required w / single DCOE carb., no plenum or balance tubes. Panel between trunk and engine compartment may be modified for the purposes of ducting air to the carbs.
Toyota MR2 ZZW30 (00-05)	*15 x 7*	*5*	*(F) 253 vented* *(R) 262 solid*		*Comp. Ratio limited to 12.0:1, Valve lift limited to .500".*
Toyota Supra (82-85)	15 x 7	*5*	(F) Disc (R) Disc	(F) 256 Disc (R) 264 Disc	Comp. ratio limited to 12.0:1. Valve lift limited to .500".

EP	Prep. Level	Weight (lbs)	Engine Type	Bore x Stroke mm/(in.)	Displ. cc/ (ci) *(nominal)*	Block Mat'l	Head/PN & Mat'l	Valves IN & EX mm/ (in.)	Carb. No. & Type	Wheel-base mm/(in.)	Track (F/R) mm/(in.)
Triumph GT6	1	1830	6 Cyl OHV	74.7 x 76.0 (2.94x2.99)	1998 (121.9)	Iron	Iron	(I) 36.6 / (1.44) (E) 32.0/(1.26)	(2) 1.5" SU or Stromberg	2108 (83.0)	1387/1387 (54.6/54.6)
Triumph TR2, 3, 3A, 4, 4A, TR4,TR4A, IRS	1	1820	4 Cyl OHV	83.1 x 92.0 86.1 x 92.0	1998 2138	Iron	Iron	(I) 39.6 (E) 33.0	(2) 1.75" SU or Stromberg, (2) 2" SU	2235	1346/1334 1387/1361
Triumph TR250, TR6	1	2190	6 Cyl OHV	74.7 x 95.0 (2.94x3.74)	2498 (152.4)	Iron	Iron	(I) 36.6 / (1.44) (I) 36.8 / (1.45) (E) 32.0/(1.26)	(3) Weber 40 DCOE on I.R. manifold. 30mm choke(s) req'd.	2235 (88.0)	1367/1354 (53.8/53.3)
Triumph TR7	1	2000	4 Cyl SOHC	90.3 x 78.0 (3.56x3.07)	1998 (121.9)	Iron	Alum	(I) 39.6 / (1.56) (E) 32.5/(1.28)	(2) Weber 45 DCOE. 32mm choke(s) req'd.	2159 (85.0)	1532/1499 (60.3/59.0)
Volkswagen Golf GTI (87-89)	2	1950 * 1999 ** 2048	4 Cyl DOHC	81.0 x 86.4 (3.19x3.40)	1780 (108.6)	Iron	Alum	(I) 32.0 / (1.26) (E) 28.0/(1.10)	Fuel injection	2472 (97.3)	60.5 / 60.2
Volvo P-1800, 1800S, 1800E, 1800ES Sports Coupe	1	1950	4 Cyl OHV	84.2 x 80.0 (3.31x3.15) 88.9 x 80.0 (3.50x3.15)	1780 (108.6) 1982 (120.9)	Iron	Iron	1780: (I) 41.9 / (1.65) (E) 35.0/(1.38) 1982: (I) 43.9 / (1.73) (E) 39.9/(1.57)	(2) 1.75" SU, (2) 1.75" Stromberg CDSE, (2) 1.75" SU HS6, (2) 2.0" SU, or fuel injection.	2451 (96.5)	1407/1407 (55.4/55.4)

* Alternate transmission w/ stock type syncros
** Alternate transmission w/ non-stock type syncros (i.e. dog-ring)

EP	Wheels (max)	Trans. Speeds	Brakes Std. (mm/(in.))	Brakes Alt.: mm/(in.)	Notes:
Triumph GT6	13 x 7	4	(F) 246 (9.7) Disc (R) 203 (8.0) Drum		(2) 1.75" carburetors @ 1970 lbs. Laycock overdrive, May use 5 speed gearbox w/o overdrive. Three (3) Weber 40mm DCOE w/28mm venturi on individual runner manifold @ 2020 lb.
Triumph TR2, 3, 3A, 4, 4A, TR4,TR4A, IRS	15 x 7	4	((F) 279 (11.0) Disc (R) 229 (9.0) Drum	(F) Calipers & discs from TR-6 (std. or alt) (R) 254 (10.0) Drum Drum may be 9" or 10" and of alfin or steel.	Front apron assembly may be made of alternate material. Laycock overdrive, may use 5 speed gearbox wothout overdrive.
Triumph TR250, TR6	15 x 7	4	(F) 279 (11.0) Disc (R) 229 (9.0) Drum	(F) 284 (11.2) Vented Disc (R) 224 (8.8) Drum (R) 229 Alfin Drum (R) 273 (10.8) Disc Disc: # C32764 Caliper: # 60-12796 LH # 60-12797 RH	Laycock overdrive, May use 5 speed gearbox w/o overdrive
Triumph TR7	15 x 7	4 or 5	(F) 248 (9.8) Disc (R) 203 (8.0) Drum	(F) 267 (10.5) Vented Disc (R) 229 (9.0) Drum (R) 267 x 20 (10.5 x .78) Disc Discs from TR-8 and alt. JRT brake kit is # STN 0068.	Rear Spoiler: # V-775, Alt. Manifold: # V-740
Volkswagen Golf GTI (87-89)	15 x 7	5	Factory spec @ all 4 wheels.		Comp. Ratio limited to 10.0:1, Valve lift limited to .330". Can use stock fuel tank is stock rear bumper and bumper support structure is retained.
Volvo P-1800, 1800S, 1800E, 1800ES Sports Coupe	15 x 7	4 or 5	(F) 279 (11.0) Disc (R) 229 (9.0) Drum	(F) 272 (10.7) Disc (R) 295 (11.6) Disc	Bosch Fuel Injection

FP	Prep. Level	Weight (lbs)	Engine Type	Bore x Stroke mm/(in.)	Displ. cc/ (ci) *(nominal)*	Block Mat'l	Head/PN & Mat'l	Valves IN & EX mm/ (in.)	Carb. No. & Type	Wheel-base mm/(in.)	Track (F/R) mm/ (in.)
Acura Integra 1600 (86-89)	2	1940 *1989 **2037	4 Cyl DOHC	75.0 x 90.0 (2.95x3.54)	1590	Alum	Alum	(I) 30.0/(1.18) (E) 27.0/(1.06)	Fuel injection	2251 (88.6)	1489/1504 (58.6/59.2)
Acura Integra (90-93)	2	2235 * 2291 ** 2347	4 Cyl DOHC	81.0 x 89.0	1835	Alum	Alum	(I) 31.0 (E) 28.0	(2) Auto-type side draft w/ 32mm choke(s) on I.R. manifold, or fuel injection	2550	1567/1567
Acura Integra LS (95-01)	2	2235 *2291 **2347	4 Cyl DOHC	81.0 x 89.0	1835	Alum	Alum	(I) 31.0 (E) 28.0	Fuel injection	2570	62.3 / 62.1
Alfa Romeo Alfetta GT & Alfetta Sedan (75-79)	2	GT: 2365 * 2424 ** 2483 Sedan: 2465 * 2527 ** 2588	4 Cyl DOHC	84.0 x 88.5	1961	Alum	Alum	(I) 44.15 (E) 40.15	Fuel injection, 34mm restrictor required between air filter and butterfly.	GT: 95.0 Sedan: 98.8	56.9 / 56.7
Alfa Romeo Giulia Spider Veloce	1	1850	4 Cyl DOHC	75.2x79.14 (3.07x3.23)	1570 (25.12)	Alum	Alum	(I) 39.69 (1.62) (E) 35.77(1.46)	(2) 40 DCOE or (2) auto-type sidedraft on IR manifold.	2170.7 or 2121.7 (88.6 or 86.6)	55.6 / 54.6
Alfa Romeo Giulia Sprint/ Spider	1	1918	4 Cyl DOHC	75.2x79.14 (3.07x3.23)	1570 (25.12)	Alum	Alum	(I) 39.69(1.62) (E) 35.77(1.46)	(1) Solex 32 PAIA, (1) 36 DCD Weber	Spider: 2170.7 /2121.7 (88.6 / 86.6) Sprint: 2295.7 (93.7)	55.6 / 54.6
Alfa Romeo GTV 1750 / Spider 1750 / Berlina 1750 (67-72)	2	GTV / Berlina: 1865 * 1912 ** 1958 Spider: 1950 * 1999 ** 2048	4 Cyl DOHC	80.0 x 88.4	1779	Alum	Alum	(I) 41.1 (E) 37.1	Fuel injection, 34mm restrictor required between air filter and butterfly.	GTV: 92.5 Spider: 88.6 Berlina: 101.8	GTV: 55.7 / 54.2 Spider: 56.3 / 54.2 Berlina: 52.1 / 50.2

FP	Wheels (max)	Trans. Speeds	Brakes Std. (mm/(in.))	Brakes Alt.: mm/(in.)	Notes:
Acura Integra 1600 (86-89)	15 x 7	5	Factory spec @ all 4 wheels		Comp. Ratio limited to 10.0:1 Valve lift limited to .390".
Acura Integra (90-93)	15 x 7	5	(F) 242 Disc (R) 239 Disc		Comp. Ratio limited to 11.0:1 Valve lift limited to .450".
Acura Integra LS (95-01)	15 x 7	5	(F) 262 Vented Disc (R) 239 Solid Disc		Comp. Ratio limited to 11.0:1 Valve lift limited to .450".
Alfa Romeo Alfetta GT & Alfetta Sedan (75-79)	15 x 7	5	Factory spec @ all 4 wheels		Comp. Ratio limited to 10.5:1 Valve lift limited to .450".
Alfa Romeo Giulia Spider Veloce	15 x 7	5	(F) 10.6 Disc (R) 10.5 Drum		
Alfa Romeo Giulia Sprint / Spider	15 x 7	5	(F) 10.6 Disc (R) 10.5 Drum	(F) 10.5 Drum (3 shoe)	
Alfa Romeo GTV 1750 / Spider 1750 / Berlina 1750 (67-72)	15 x 7	5	Factory spec @ all 4 wheels		Comp. Ratio limited to 10.5:1 Valve lift limited to .450".

FP	Prep. Level	Weight (lbs)	Engine Type	Bore x Stroke mm/(in.)	Displ. cc/ (ci) *(nominal)*	Block Mat'l	Head/PN & Mat'l	Valves IN & EX mm/ (in.)	Carb. No. & Type	Wheel-base mm/(in.)	Track (F/R) mm/ (in.)
Alfa Romeo GTV & Berlina (72-74)	2	2165 * 2219 ** 2273	4 Cyl DOHC	84.0 x 88.5	1961	Alum	Alum	(I) 44.15 (E) 40.15	Fuel injection, 34mm restrictor required between air filter and butterfly.	GTV: 92.5 Berlina: 101.8	GTV: 55.7 / 54.2 Berlina: 52.1 / 50.2
Alfa Romeo Spider (72-86)	2	2265 * 2322 ** 2378	4 Cyl DOHC	84.0 x 88.5	1961	Alum	Alum	(I) 44.15 (E) 40.15	Fuel injection, 34mm restrictor required between air filter and butterfly. (72-80) w/ Spica, (81-86) w/ Bosch	88.6	56.3 / 54.2
Austin-Healey Sprite Mk. II, III, IV MG Midget Mk I, II, III, IV & 1500	1	1275 @ 1630 1500 @ 1660	4 Cyl OHV	68.11x78.4 (2.78x3.20) 71.05x84.3 (2.90x3.44)	1275 (77.78) 1491 (90.95)	Iron	Iron	1275cc: (I) 32.1(1.31) (E) 28.42(1.16) 1500cc: (I) 35.28(1.44) (E) 28.67(1.17)	(2) 1.25" SU, (2) 1.5" SU CD4 (1275 only), (1) 1.5" Zenith, (1) 1.5" Stromberg SD, (1) 1.5" SU, maximum spacer block (isolator) length 1.25". *(1) 1.75" SU (1500 only)*	1960 (80.0)	1229.9/ 1193.2 (50.2/48.7)
BMW 320*i/is* (E21) (77-79)	2	2110 * 2163 ** 2216	4 Cyl SOHC	89.0 x 80.0	1990	Iron	Alum	(I) 46.0(1.88) (E) 38.0(1.55)	(1) 40 DCNF w/ 32mm chokes, or fuel injection.	100.9	1481/1494 (58.3/58.8)
BMW 320*i/is* (E21) (80-83)	2	2060 *2112 **2163	4 Cyl SOHC	89.0 x 71.0	1767	Iron	Alum	(I) 44.0 (E) 38.0	(1) 40 DCNF w/ 32mm chokes, or fuel injection	100.9	1481/1494 (58.3/58.8)
BMW 318*i/is*i (E30) (84-85)	2	2060 *2112 **2163	4 Cyl SOHC	89.0 x 71.0	1767	Iron	Alum	(I) 44.0 (E) 38.0	(1) 40 DCNF w/ 32mm chokes, or fuel injection.	101.2	59.0 / 59.3
BMW 1600	1	1891	4 Cyl SOHC	84.0 x 71.0	1537	Iron	Alum	(I) 42.0 (E) 35.0	(1) 40 DCN, DCNF, IDF w/ 36mm choke(s), (2) 40 DCOE side draft w/ 36mm choke(s).	98.4	57.3 / 57.3
BMW 2002/tii	2	2075 * 2127 ** 2179	4 Cyl SOHC	89.0 x 80.0	1990 (121.39)	Iron	Alum	(I) 46.0(1.88) (E) 38.0(1.55)	Fuel injection, or (1) 40 DCNF w/ 32mm choke(s).	2410.8 (98.4)	1379.4/ 1379.4 (56.3/56.3)
Chevrolet Chevette 1.6	1	1853	4 Cyl SOHC	82.0 x 75.7	1598	Iron	Iron	(I) 39.1 (E) 32.1	(2) auto type side draft w/ 36mm choke(s) on I.R. manifold.	94.3	55.75 / 55.75
Dodge Shelby Charger / Omni 024 (83-84)	2	2250 * 2306 ** 2363	4 Cyl SOHC	87.5 x 92.0	2213	Iron	Alum	(I) 40.6 (E) 35.4	Carburetion of Fuel injection	96.5	61.4 / 61.0

FP	Wheels (max)	Trans. Speeds	Brakes Std. (mm/(in.))	Brakes Alt.: mm/(in.)	Notes:
Alfa Romeo GTV & Berlina (72-74)	15 x 7	5	Factory spec @ all 4 wheels		Comp. Ratio limited to 10.5:1 Valve lift limited to .450".
Alfa Romeo Spider (72-86)	15 x 7	5	Factory spec @ all 4 wheels		Comp. Ratio limited to 10.5:1 Valve lift limited to .450".
Austin-Healey Sprite Mk. II, III, IV MG Midget Mk I, II, III, IV & 1500	13 x 6	4	(F) 203.4 (8.3) Disc (R) 171.5 (7.0) Drum	(F) 231.6 (9.12) Disc	Alternate intake manifold for 1275 (#NPN 500), 9.125 Disc (#208715), Calipers (#27H-4651), Battery tray may be removed, Parts may not be interchanged between engine units.
BMW 320*i/is* (E21) (77-79)	15 x 7	4	(F) 254 Disc (R) 250 Drum		Comp. Ratio limited to 10.0:1, Valve lift limited to .450". Trunk mounted fuel cell allowed. Factory 2bbl intake manifold from BMW 2002 is permitted.
BMW 320*i/is* (E21) (80-83)	15 x 7	5	(F) 254 Disc (R) 250 Drum		Comp. Ratio limited to 10.0:1, Valve lift limited to .450". Trunk mounted fuel cell allowed. Factory 2bbl intake manifold from BMW 2002 is permitted.
BMW 318*i/is* (E30) (84-85)	15 x 7	5	(F) 261 Disc (R) 229 Drum		Comp. Ratio limited to 10.0:1, Valve lift limited to .450". Trunk mounted fuel cell allowed. Factory 2bbl intake manifold from BMW 2002 is permitted.
BMW 1600	15 x 7	4	(F) 10.1 Disc (R) 9.1 x 1.6 Drum		Factory 2bbl intake manifold from 2002 is permitted.
BMW 2002/tii	15 x 7	4	Factory spec @ all 4 wheels		Comp. Ratio limited to 10.0:1, Valve lift limited to .450". Orientation of the alternate carburetor is unrestricted. The alternate carb adapter may not be thicker than 1.25". The adapter may have a bore larger than the throttle bore of the approved alternate carburetor.
Chevrolet Chevette 1.6	15 x 7	4 or 5	(F) 9.68 Disc (R) 7.88 Drum		
Dodge Shelby Charger / Omni 024 (83-84)	15 x 7	5	(F) 256 Vented Disc (R) 200 Drum		Comp. Ratio limited to 10.5:1, Valve lift limited to .450".

FP	Prep. Level	Weight (lbs)	Engine Type	Bore x Stroke mm/(in.)	Displ. cc/ (ci) *(nominal)*	Block Mat'l	Head/PN & Mat'l	Valves IN & EX mm/ (in.)	Carb. No. & Type	Wheel-base mm/(in.)	Track (F/R) mm/ (in.)
Elva Courier Mk. I, II & III 1622 & 1798	1	1622cc: 1800 1798cc: 1825	4 Cyl OHV	76.2 x 88.9 80.3 x 88.9	1622 1798	Iron	Iron	(I) 39.9 (E) 34.3	1622cc: (2) 1.75" SU or Stromberg 1798cc: (2) 1.50" SU or Stromberg	2286	53.5/54.6
Elva Courier Mk. III, IV 1800 & Mk, IV R & C	1	1825	4 Cyl OHV	80.3 x 88.9	1798	Iron	Iron	(I) 39.9 (E) 34.3	(2) 1.50" SU or Stromberg	2286	53.5/54.6
Fiat 124 Sport Spider (-1977)	1	1875	4 Cyl DOHC	3.15 x 3.15 3.15 x 3.12 3.31 x 3.12	1608 1592 1756	Iron	Alum	(I) 1.64 (E) 1.43	(1) 34 DFH1, 26/34 DHSA1, 28/36 DHSA2, 34 DMSA1/100, (1) 32 ADFA2/100 ATL, (1) 34 DMS201, 36 DCNF w/ 30mm choke(s)), (1) 40 DCNF w/ 30mm choke(s).	95.3/89.8	56.7 / 55.4
Fiat X-1/9 & Bertone 1300	1	1715	4 Cyl SOHC	86.0 x 55.5	1290	Iron	Alum	(I) 1.43 (E) 1.21 (E) 1.23	(1) Weber 32 DMTR or DATRA/100 w/ 32mm primary and secondary throttle bores, (1) 40 DCNF w/ 32mm choke(s)	86.7	56.3 / 56.6
Fiat X-1/9 & Bertone	1	1815	4 Cyl SOHC	3.40 x 2.52	1498	Iron	Alum	(I) 1.43 (E) 1.31	(1) 34 DMTR w/ 34mm primary & secondary throttle bores, (1) 36 DCNF w/34mm choke(s) and manifold adapter, or fuel injection, (1) 40 DCNF w/ 34mm choke(s).	86.7	56.3 / 56.6
Ford Capri 2000 (71-74)	1	2050	4 Cyl SOHC	91.0 x 77.0	1993	Iron	Iron	(I) 42.2 (E) 36.2	(1) 40 DCN, DCNF, IDF w/ 34mm choke(s), (2) Automotive-type sidedraft w/34mm choke(s) on I.R. manifold.	100.8	55.5 / 54.5
Ford Fiesta (78-80)	1	1790	4 Cyl OHV	81.0 x 78.0	1598	Iron	Iron	(I) 1.41 (E) 1.24	(1) 40 DCN, DCNF, IDF, (2) auto type side draft on I.R. manifold. 34mm choke(s) required.	90.0	56.5 / 56.0
Ford Pinto	1	2030	4 Cyl SOHC	91.0 x 77.0	1993	Iron	Iron	(I) 42.2 (E) 36.2	(1) 40 DCN, DCNF, IDF w/ 34mm choke(s), (2) Automotive-type sidedraft w/30mm choke(s) on I.R. manifold.	94.0	58.6 / 59.4
Honda Civic 1.5 (88-91)	1	1950	4 Cyl SOHC	75.0 x 84.5	1493	Alum	Alum	(I) 29.0 (E) 25.0	(2) auto type side draft w/30mm venturi on I.R. manifold, or fuel injection.	98.4	59.8 / 60.0
Honda Civic / Civic Si (84-87)	1	1900	4 Cyl SOHC	74.0 x 86.5	1488	Alum	Alum	(I) 27.1 (E) 32.1	(1) 40 DCN, DCNF, IDF w/32mm choke(s), (2) auto type side draft w/32mm choke(s) on I.R. manifold, or fuel injection.	93.7	59.3 / 59.9

FP	Wheels (max)	Trans. Speeds	Brakes Std. (mm/(in.))	Brakes Alt.: mm/(in.)	Notes:
Elva Courier Mk. I, II & III 1622 & 1798	*15 x 7*	4	(F) 229 (9.0) Drum (R) 203 (8.0) Drum	(F) 229 (9.0) Disc (R) 254 (10.0) Drum (w / MGA axle) (F) 279 (11.0) Disc (R) Mk.4T 229 (9.0)	ATB 7224 MGA axle housing assy., Only the Mk.III 1622cc is allowed to update to the 1798cc engine including the 15" wheel. A Mk.III making this update may use the 13" wheels.
Elva Courier Mk. III, IV 1800 & Mk, IV R & C	15 x 7	4	(F) 229 (9.0) Drum (R) 203 (8.0) Drum	(F) 229 (9.0) Disc (R) 254 (10.0) Drum (w/ MGA axle) (F) 279 (11.0) Disc (R) Mk.4T 229 (9.0)	Mk.IV T R & C have IRS, Mk.III & IV 1800 have live axle. ATB 7224 MGA axle housing assy., Only the Mk.III 1622cc is allowed to update to the 1798cc engine including the 15" wheel. A Mk.III making this update may use the 13" wheels.
Fiat 124 Sport Spider (-1977)	13 x 7	5	(F) 8.97 Disc (R) 8.94 Disc	(F&R) 10.0 Disc	Alternate rotor (#82346805). Allow (2) 40 IDF w/ *32mm choke(s)* @ 1965 lbs. Orientation of the alternate carburetor is unrestricted. The alternate carb adaptor may not be thicker than 1.25 inches. The adapter may have a bore larger than the throttle bore of the approved alternate carburetor.
Fiat X-1/9 & Bertone 1300	13 x 7	5	(F&R) 8.94 Disc	(F&R) 10.0 x .40 Disc (Lancia)	Top panels may remain in place if securely bolted or pinned. Alt. Crankshaft: #4292177. Engine hatch rain tray may be removed. Trunk mounted fuel cell allowed. Orientation of the alternate carburetor is unrestricted. The alternate carb adapter may not be thicker than 1.25 inches. The adapter may have a bore larger than the throttle bore of the approved alternate carburetor.
Fiat X-1/9 & Bertone	13 x 7	5	(F&R) 8.94 Disc	(F&R) Lancia 9.875 x .40 Disc	Fuel cell may be located in front trunk, Crankshaft (#4211630), Alternate grille for '79: '78 X19 grill & valence, Top panels may remain in place if securely bolted or pinned, Engine hatch rain tray may be removed, 4 speed trans from X19. Orientation of the alternate carburetor is unrestricted. The alternate carb adapter may not be thicker than 1.25 inches. The adapter may have a bore larger than the throttle bore of the approved alternate carburetor.
Ford Capri 2000 (71-74)	15 x 7	4	(F) 9.6 Disc (R) 9.0 x 2.25 Drum		
Ford Fiesta (78-80)	13 x 7	4	(F) 8.7 Disc (R) 7.0 x 1.16 Drum		Formula F spec cylinder head and intake manifold may be used.
Ford Pinto	15 x 7	4 or 5	(F) 9.30 Disc (R) 9.0 x 1.38 Drum		
Honda Civic 1.5 (88-91)	15 x 7	5	(F) 240 Disc (R) 180 x 30 Drum		
Honda Civic / Civic Si (84-87)	13 x 7	5	(F) 231 Disc (R) 180 x 30 Drum		Intake manifold from carbureted version of car is required

FP	Prep. Level	Weight (lbs)	Engine Type	Bore x Stroke mm/(in.)	Displ. cc/ (ci) *(nominal)*	Block Mat'l	Head/PN & Mat'l	Valves IN & EX mm/ (in.)	Carb. No. & Type	Wheel-base mm/(in.)	Track (F/R) mm/ (in.)
Honda Civic Del Sol	2	2190 * 2245 ** 2300	4 Cyl DOHC	81.0 x 77.4 (3.19x3.05)	1595	Alum	Alum	(I) 33.0/(1.30) (E) 28.0/(1.10)	Fuel injection	2370 (93.3)	567/1557 (61.7/61.3)
Honda Civic Si (88-91)	2	1900 *1948 **1995	4 Cyl SOHC	75.0 x 90.0	1590	Alum	Alum	(I) 29.0 (E) 25.0	Fuel injection	2500	1560/1567
Honda Civic Si (88-91)	1	2075	4 Cyl SOHC	75.0 x 90.0 (2.95x3.54)	1590 (97.0)	Alum	Alum	(I) 29.0 / (1.14) (E) 25.0/(0.98)	(1) 40 DCOE w/ 34mm choke(s), (2) Auto-type sidedraft w/ 32mm choke(s) on I.R. manifold, or fuel injection.	2500 (98.4)	1560/1567 (61.4/61.7)
Honda Civic Si (92-95)	2	1950 *1999 **2048	4 Cyl SOHC	75.0 x 90.0	1590	Alum	Alum	(I) 30.0 (E) 26.0	Fuel injection	2573	62.3 / 61.9
Honda Civic EX VTEC SOHC (92-95)	2	1950 * 1999 ** 2048	4 Cyl SOHC	75.0 x 90.0 (2.95x3.54)	1590 (97.0)	Alum	Alum	(I) 30.0 / (1.18) (E) 26.0/(1.02)	Fuel injection	2621 (103.2)	1567/1557 (61.7/61.3)
Honda CRX 1.5 (88-91)	1	1950	4 Cyl SOHC	75.0 x 84.5	1493	Alum	Alum	(I) 29.0 (E) 25.0	(2) auto type side draft w/30mm venturi on I.R. manifold, or fuel injection.	90.6	59.8 / 60.0
Honda CRX / CRX Si (84-87)	1	1900	4 Cyl SOHC	74.0 x 86.5	1488	Iron	Alum	(I) 27.1 (E) 32.1	(1) 40 DCN, DCNF, IDF w/32mm choke(s), (2) auto type side draft w/32mm venturi on I.R. manifold, or fuel injection.	86.6	59.3 / 59.9
Honda CRX Si (88-91)	2	1900 *1948 **1995	4 Cyl SOHC	75.0 x 90.0	1590	Alum	Alum	(I) 29.0 (E) 25.0	Fuel injection	2235	1560/1567
Honda CRX Si (88-91)	1	2075	4 Cyl SOHC	75.0 x 90.0 (2.95x3.54)	1590 (97.0)	Alum	Alum	(I) 29.0 / (1.14) (E) 25.0/(0.98)	(1) 40 DCOE w/ 34mm choke(s), (2) Auto-type sidedraft w/ 32mm choke(s) on I.R. manifold, or fuel injection.	2304 (90.7)	1560/1567 (61.4/61.7)
Honda Prelude (84-87)	2	2080 * 2132 ** 2184	4 Cyl 12V SOHC	80.0 x 91.0	1829	Iron	Alum	(I) 30.0 (E) 35.0	(2) auto type side draft w/30mm choke(s) on I.R. manifold	96.5	62.1 / 62.1
Jensen Healy	2	2300 *2358 **2415	4 Cyl DOHC	85.3 x 69.3	1973	Alum	Alum	(I) 35.6 (E) 30.9	(2) 1.75'' Stromberg	2337	1448/1422
Lancia Scorpion (1976)	1	2030	4 Cyl DOHC	3.31 x 3.12	1756	Iron	Alum	(I) 1.67 (E) 1.44	(2) Weber 40 IDF - 40IDI, (2) Solex C40P116, (2) DCOE w / 36mm choke(s)	90.5	59.8 / 61.5

FP	Wheels (max)	Trans. Speeds	Brakes Std. (mm/(in.))	Brakes Alt.: mm/(in.)	Notes:
Honda Civic Del Sol	15 x 7	5	(F) 262 (10.3) Disc (R) 239 (9.4) Disc		Comp. Ratio limited to 11.0:1. Valve lift (measured as raced - w/ lash): *.416"* max. Level 1 dry sump, connecting rods, intake manifold porting, crankshaft, rocker arms and cam followers. May be prepared as a coupe or "targa top", Petty-bar roll cage allowed in lieu of rearward roll cage braces.
Honda Civic Si (88-91)	15 x 7	5	Factory spec @ all 4 wheels		Comp. Ratio limited to 12.0:1, Valve lift limited to .450".
Honda Civic Si (88-91)	15 x 7	5	(F) 241 (9.5) Disc (R) 180 x 38 (7.1 x 1.5) Drum	(R) 239 (9.4) Disc	Single 40 DCOE requires "dual Y" manifold w / no balance tubes or plenum.
Honda Civic Si (92-95)	15 x 7	5	(F) 262 Vented Disc (R) 201 Solid Disc		Comp. Ratio limited to 12.0:1, Valve lift limited to .450".
Honda Civic EX VTEC SOHC (92-95)	15 x 7	5	Factory spec @ all 4 wheels.		Comp. Ratio limited to 12.5:1, Valve lift limited to .500".
Honda CRX 1.5 (88-91)	15 x 7	5	(F) 240 Disc (R) 180 x 30 Drum		
Honda CRX / CRX Si (84-87)	13 x 7	5	(F) 231 Disc (R) 180 x 30 Drum		
Honda CRX Si (88-91)	15 x 7	5	Factory spec @ all 4 wheels		Comp. Ratio limited to 12.0:1, Valve lift limited to .450".
Honda CRX Si (88-91)	15 x 7	5	(F) 241 (9.5) Disc (R) 180 x 38 (7.1 x 1.5) Drum	(R) 239 (9.4) Disc	Single 40 DCOE requires "dual Y" manifold w / no balance tubes or plenum.
Honda Prelude (84-87)	13 x 7	5	(F) 229 Vented Disc (R) 237 Solid Disc		Comp. Ratio limited to 12.0:1. Valve lift (measured as raced - w/ lash): .500" max. Level 1 dry sump, connecting rods, intake manifold porting, crankshaft, rocker arms and cam followers.
Jensen Healy	15 x 7	5	(F) 254 Disc (R) 229 Drum		Comp. Ratio limited to 10.5:1, Valve lift limited to .450''
Lancia Scorpion (1976)	15 x 7	5	(F & R) 8.9 Disc	(F&R) 254 x 10 Solid Disc	Trunk mounted fuel cell is permitted. Fabric roof panel may be replaced with alternate material.

FP	Prep. Level	Weight (lbs)	Engine Type	Bore x Stroke mm/(in.)	Displ. cc/ (ci) *(nominal)*	Block Mat'l	Head/PN & Mat'l	Valves IN & EX mm/ (in.)	Carb. No. & Type	Wheel-base mm/(in.)	Track (F/R) mm/ (in.)
Lotus Super Seven	1	1530	4 Cyl OHV	81.0 x 72.9 (3.19x2.87)	1503 (91.7)	Iron	Iron	(I) 36.6 (1.44) (E) 30.2 (1.19)	(2) weber DCOE on I.R. manifold w/ 34mm choke(s)	2235 (88.0)	1293/1400 (50.9/55.1)
Lotus Super Seven Series Four	1	1735	4 Cyl OHV	81.0 x 77.7 (3.19x3.06)	1599 (97.5)	Iron	Iron	(I) 38.4 / (1.51) (E) 31.8/(1.25)	(1) Weber 32 DFM, DFD w/ 28mm primary & 28mm secondary, (1) Weber DCNF w/ 28mm choke(s).	2286 (90.0)	1331/1400 (52.4/55.1)
Lotus Mk 46, 54, 65 Europa	1	1630	4 Cyl OHV	75.9 x 81.0 (2.99x3.19) 77.0 x 84.1 (3.03x3.31)	1470 (89.7) 1565 (95.5)	Alum	Alum	(I) 37.6 / (1.48) (E) 31.2/(1.23)	(1) Solex 1 3/8" DIDSA2, (1) Weber 45 DCOE w / "Dual-Y" manifold	2311 (91.0)	1440/1440 (56.7/56.7)
Mazda 626 (84-87)	2	2000 * 2050 ** 2100	4 Cyl SOHC	86.0 x 86.0	1998	Iron	Alum	(I) 44.0 (E) 36.0	Carburetion or Fuel injection	2510	60.5 / 60.3
Mazda GLC / 323 (86-88)	2	1800 * 1845 ** 1890	4 Cyl SOHC	78.0 x 83.6	1597	Iron	Alum	(I) 38.1 (E) 32.1	(2) auto type side draft w/32mm choke(s) on I.R. manifold, or fuel injection.	94.5	57.4 / 58.4
Mazda Miata 1.6L (90-93)	2	2075 * 2127 ** 2179	4 Cyl DOHC	78.0 x 83.6	1597	Iron	Alum	(I) 31.1 (E) 26.3	Fuel injection	2266	1479/1491
Mercury Capri 1.6L (91-94)	2	1950 *1999 **2048	4 Cyl DOHC	78.0 x 83.6	1597	Iron	Alum	(I) 31.1 (E) 26.3	Fuel injection	2406	1479/1524
MGA 1500/1600 / 1622 Coupe & Roadster	1	1862	4 Cyl OHV	2.88 x 3.50 2.97 x 3.50 3.00 x 3.50	1469 1588 1622	Iron	Iron	(I)1.63 (I) 1.57 (I) 1.50 (E) 1.44 (E) 1.35 (E) 1.28	(2) 1.5" or 1.75" SU or Stromberg	94.0	52.0 / 53.3
MGB & MGB-GT	1	2000	4 Cyl OHV	80.3 x 88.9 (3.16x3.50)	1798 (109.7)	Iron	Iron	(I) 39.9(1.57) (I) 41.4(1.63) (E)34.3(1.35)	(2) 1.75" SU or Stromberg	2311 (91.0)	1346/1351 (53.0/53.2)

FP	Wheels (max)	Trans. Speeds	Brakes Std. (mm/(in.))	Brakes Alt.: mm/(in.)	Notes:
Lotus Super Seven	13 x 6	4	(F) 203 (8.0) Drum (R) 178 (7.0) Drum	(F) 229 (9.0) Disc #OAOB 405/6 (7/8" track increase) (F) 244 (9.6) Disc	Authorized frame modification: Info. available from SCCA. Headlights & associated hardware may be removed. Series 4 axle housing is permitted. Suspension components can pass through exterior bodywork. Front fenders may be modified as described here. The fender mounting flange shall be a minimum of 50 inches in length. At the rear of the fender, the lower edge of the mounting flange shall extend no higher than 4-1/2 inches above the undertray of the vehicle. At a point 6 inches rearward from the front of the flange, the fender shall be no narrower than 16-7/8 inches as measured along the upper curvature. At a point 18 inches rearward from the front of the flange, the fender shall be no narrower than 7 inches along the upper curvature and from 34 inches to 48 inches, the fender shall be no less than 3"inches along the upper curvature. From 48 inches rearward, a radius may provide a transition between the outer and the rearmost fender edges. The contours resulting from this modification shall be gradual and describe a smooth curve in plan view. A diagram is available from SCCA. No further modifications are allowed.
Lotus Super Seven Series Four	13 x 6	4	(F) 229 (9.0) Disc (R) 229 (9.0) Drum	(F) 244 (9.6) Disc	Headlights & associated hardware may be removed. NOTE: Rear edge of front fenders shall be 4.5" above body undertray. Floor pans: One (1) right, One (1) left, attached to bottom of frame tubes. Area beneath transmission / driveshaft shall remain open.
Lotus Mk 46, 54, 65 Europa	13 x 7	4 or 5	(F) 229 (9.0) Disc (R) 203 (8.0) Drum	(F) 244 (9.6) Disc (R) 231 (9.1) Disc from twin cam	Renault R-16 (non-crossflow) cylinder head casting. Trunk mounted fuel cell is permitted. Any available transaxle with the same number of forward gears mounted in standard position.
Mazda 626 (84-87)	15 x 7	5	(F) 254 Solid Disc (R) 231 Drum		Comp. Ratio limited to 11.0:1 Valve lift limited to .450".
Mazda GLC / 323 (86-88)	*15 x 7*	4 or 5	(F) 238 Disc (R) 200 Drum		Comp. Ratio limited to 12.0:1. Valve lift (measured as raced - w/ lash): .500" max. Level 1 dry sump, connecting rods, intake manifold porting, crankshaft, rocker arms and cam followers.
Mazda Miata 1.6L (90-93)	15 x 7	5	Factory spec @ all 4 wheels		Comp. Ratio limited to 10.0:1, Valve lift limited to .390". OEM hardtop allowed. 1994 Mazda Miata (1840cc) differential housing permitted, part #'s MA0227600A and MA0327100A.
Mercury Capri 1.6L (91-94)	15 x 7	5	Factory spec @ all 4 wheels		Comp. Ratio limited to 10.0:1, Valve lift limited to .390".
MGA 1500/1600 / 1622 Coupe & Roadster	15 x 7	4	(F) 11.0 Disc (R) 10.0 Drum	(F) 10.0 Drum (F&R) 11.0 Disc	It is permitted to replace wood floor boards with metal. MGB intake manifold permitted. Cylinder block (3 main bearing) from MGB. MGB 18G/18GA series 3 main bearing crankshaft allowed.
MGB & MGB-GT	15 x 7	4	(F) 273 (10.8) Disc (R) 254 (10.0) Drum		17th 8152 (0.75") wheel cylinders, Alt. Manifold: Any individual runner manifold with runner length of 3.0-4.0" measured flange to flange. 4 speed gearbox w/o overdrive.

FP	Prep. Level	Weight (lbs)	Engine Type	Bore x Stroke mm/(in.)	Displ. cc/ (ci) *(nominal)*	Block Mat'l	Head/PN & Mat'l	Valves IN & EX mm/ (in.)	Carb. No. & Type	Wheel-base mm/(in.)	Track (F/R) mm/ (in.)
Nissan/Datsun PL510	1	1891	4 Cyl SOHC	83.0 x 73.7	1595	Iron	Alum	(I) 44.2 (I) 41.9 (E) 35.3 (E) 33.0	(1) 40 DCN, DCNF, IDF w/ 36mm choke(s), (2) auto type side draft w/ 36mm choke(s) on I.R. manifold.	95.3	54.5 / 54.5
Nissan/Datsun SPL 311/311-U	1	1824	4 Cyl OHV	3.43 x 2.63	1595	Iron	Iron or Alum	(I) 1.86 (I) 1.66 (I) 1.69 (E) 1.47 (E) 1.38 (E) 1.26	(2) Auto type side draft 45mm max. throttle bore or 46mm H46 Hitachi/SU w/ 38mm choke(s) on I.R. manifold.	89.8	54.7 / 51.7
Opel GT	1	1900	4 Cyl OHV	93.0 x 69.9	1897	Iron	Iron	(I) 40.0 / 42.0 (E) 34.0	(1) 40 DCN, DCNF, IDF w/36mm choke(s), (2) auto type side draft w/36mm choke(s) on I.R. manifold, or fuel injection.	95.7	*53.4/54.6*
Opel Manta (71-75)	1	1900	4 Cyl OHV	93.0 x 69.9	1897	Iron	Iron	(I) 40.0 / 42.0 (E) 34.0	(1) 40 DCN, DCNF IDF w/36mm choke(s), (2) auto type side draft w/36mm choke(s) on I.R. manifold, or fuel injection.	95.7	55.5 / 55.1
Porsche 356, A, C (1500, 1600)C (1600) SC,B, Su-per 90 Cabriolet	1	1920	4 Cyl OHV	3.25 x 2.91 3.15 x 2.91	1582 1488	Alum	Alum	(I) 1.58 (E) 1.34	(2) Zenith 32 NDIX, (2) Solex 32 PBIC, (2) Solex 40 PBIC, (2) Solex P II 4 or PJ54. 38mm choke(s) req'd.	82.7	55.0 / 53.7
Porsche 912 Coupe / Targa (-1969)	1	1950	4 Cyl OHV	3.25 x 2.91	1582	Alum	Alum	(I) 1.58 (E) 1.34	(2) Solex PII-4. 38mm chok(s) req'd.	87.0 or 89.2	57.5 / 56.2
Porsche 914-4	1	1970	4 Cyl OHV	90.0 x 66.0 93.0 x 66.0	1679 1795	Alum	Alum	(I) 1.55/1.65 (E) 1.30/1.34	(2) Solex 40 PII-4, (2) weber 40 IDF, (2) Del'Orto 40mm. 38mm choke(s) req'd.	96.5	56.5 / 58.2
Porsche 924 (76-84)	2	2200 * 2255 ** 2310	4 Cyl SOHC	86.5 x 84.4	1984	Iron	Alum	(I) 40.0 (E) 33.0	Fuel Injection	2400	1420 / 1392
Saab 900S (85-94)	2	Sedan: 2160 *2214 **2268 Conv.: 2260 *2317 **2373	4 Cyl DOHC	90.0 x 78.0	1985	Iron	Alum	(I) 32.0 (E) 29.0	Fuel injection	2515	60.5 / 60.9

FP	Wheels (max)	Trans. Speeds	Brakes Std. (mm/(in.))	Brakes Alt.: mm/(in.)	Notes:
Nissan/Datsun PL510	15 x 7	4	(F) 9.1 Disc (R) 9.0 Drum	1977-78 Datsun 240/260/280Z front rotors and calipers and rear aluminum drums are permitted.	Allow any originally-delivered or superceding cylinder ead. Alternate cylinder head: P/N: 11041-V9182 casting #V912.
Nissan/Datsun SPL 311/311-U	15 x 7	4 or 5	(F) 11.2 Disc (R) 9.0 Drum		1977-78 Datsun 240/260/280Z front rotors and calipers and rear aluminum drums are permitted.
Opel GT	13 x 7	4	(F) 247 Disc (R) 229 Drum	(F) 247 Vented Discs and calipers from Opel Omega / 75 Opel 1900 Ascona / Manta, kit # 91305079.	
Opel Manta (71-75)	13 x 7	4	(F) 9.7 Disc (R) 9.0 Drum	(F) 247 Vented Discs and calipers from Opel Omega / 75 Opel 1900 Ascona / Manta, kit # 91305079.	
Porsche 356, A, C (1500,1600), C (1600) SC, B, Super 90 Cabriolet	15 x 7	4	(F) 10.8 Disc (R) 11.2 Disc	(F & R)11.0 Drum # 64442095-60mm front brakes & vent backing plates	64451101018 - Alum front hood, 64451201018 - Alum rear hood, 64453100410 - Alum door, 64453100310 - Alum door. Cylinder barrels of alternate material are permitted.
Porsche 912 Coupe / Targa (-1969)	15 x 7	4 or 5	(F) 11.1 Disc (R) 11.2 Disc	901351 / 35240115 Vented Rotors	Cylinder barrels of alternate material are permitted.
Porsche 914-4	15 x 7	4 or 5	(F) 11.1 Disc (R) 11.2 Disc	914-6 calipers & rotors allowed. Front "M" calipers may be used on rear rotors.	Standard intake manifold: Porsche part #021 129 705N. Alternate manifolds with the same length and configuration (4-5¼" center line axis) are allowed. (i.e. Pierce manifold part # 99004.822. Top panel may remain in place is securley bolted or pinned. Cylinder barrels of alternate material are permitted.
Porsche 924 (76-84)	15 x 7	5	(F) 282 Vented Disc (R) 290 Solid Disc		Comp. Ratio limited to 10.5:1, Valve lift limited to .500".
Saab 900S (85-94)	15 x 7	5	(F) 276 Disc (R) 276.5 Disc		Comp. Ratio limited to 11.0:1 Valve lift limited to .380".

FP	Prep. Level	Weight (lbs)	Engine Type	Bore x Stroke mm/(in.)	Displ. cc/ (ci) *(nominal)*	Block Mat'l	Head/PN & Mat'l	Valves IN & EX mm/ (in.)	Carb. No. & Type	Wheel-base mm/(in.)	Track (F/R) mm/ (in.)
Saturn SL2/SC/ SC2 (91-95)	2	2235 * 2291 ** 2347	4 Cyl DOHC	82.0 x 90.0	1901	Alum	Alum	(I) 32.3 (E) 27.4	Fuel Injection	2601 except 91-96 coupe: 2520	61.0 / 60.2
Sunbeam Alpine I, II, III, IV, V, & Harrington LeMans	1	1976	4 Cyl OHV	3.21 x 3.25 3.21 x 3.00 3.11 x 3.00	1725 1592 1494	Iron	Alum	(I) 1.50/1.48/ 1.43/1.44 (E) 1.21/1.18 1.17/1.18	(2) Zenith-Stromberg 150CD, (1) Solex 32 PAIA, (1) Zenith 36 WIP2	86.0	55.1 / 54.0
Suzuki Swift GT & GTi	1	1691	4 Cyl DOHC	2.91 x 2.97	1299	Alum	Alum	(I) 29.0 (E) 23.9	(1) 40 DCOE, (2) auto type side draft on I.R. manifold, 32mm choke(s) required, or fuel injection, alt. 52mm throttle body allowed.	89.3	58.4 / 57.4
Toyota Corolla 2TC (71-74)	1	1853	4 Cyl OHV	85.0 x 70.0	1588	Iron	Alum	(I) 41.9 (I) 41.0 (E) 36.0	(1) 40 DCN, DCNF, IDF, (2) auto type side draft w/ 36mm choke(s) on I.R. manifold.	91.9	54.5 / 55.5
Toyota MR-2 1.6L (85-89)	2	2075 * 2127 ** 2179	4 Cyl DOHC	81.0 x 77.0	1587	Iron	Alum	(I) 30.7 (E) 26.0	Fuel injection	2320	1532/1532
Triumph TR2/3/4	1	2060	4 Cyl OHV	83.1 x 92.0 86.1 x 92.0	1991 2138	Iron	Iron	(I) 39.6 (E) 33.0	(2) 1.75" SU	2235	1346/1334 1387/1361
Triumph Spitfire Mk.III	1	1680	4 Cyl OHV	2.90x2.992	1296	Iron	Iron	(I) 1.30 (E) 1.17	(2) 1.25" or 1.50" Stromberg or SU, (1) CDSE Stromberg, (1) 1.50" SU, maximum spacer block (isolator) length 1.25".	83.0	53.6 / 52.6
Triumph Spitfire Mk. IV & 1500	1	1296: 1680 1493: 1660	4 Cyl OHV	2.90x2.992 2.90 x 3.44	1296 1493	Iron	Iron	(E) 1.17 1296cc: (I) 1.30 1493cc: (I) 1.44	1296cc = (2) 1.25" or 1.50" SU or Strom-berg, 1493cc = (1) 1.5" Stromberg type SU, (1) 1.5" SU, or (1) 1.75" SU	83.0	53.6 / 54.6
Turner 1500	1	1700	4 Cyl OHV	3.19 x 2.86	1498	Iron	Iron	(I) 1.45 (E) 1.20	(1) 28/36 DCD 22, 32/36 DGN, 36 DCNF w/30mm choke(s), (1) 40 DCNF w/ 30mm choke(s), (2) Weber DCOE on I.R. manifold w/ 30mm choke(s).	82.0	48.9 / 48.2
Volkswagen Golf 1.8 (85-92)	1	1950	4 Cyl SOHC	81.0 x 86.4 (3.19x3.40)	1780 (108.6)	Iron	Alum	(I) 40.0 / (1.57) (E) 33.0/(1.30)	(1) 40 DCN, DCNF, IDF w/ 36mm choke(s), (2) Auto-type sidedraft w/ 32mm choke(s) on I.R. manifold, or fuel injection.	2472 (97.3)	60.5 / 60.2

FP	Wheels (max)	Trans. Speeds	Brakes Std. (mm/(in.))	Brakes Alt.: mm/(in.)	Notes:
Saturn SL2/ SC.SC2 (91-95)	15 x 7	5	(F) 251 x 18 Vented Disc (R) 245 x 11 Solid Disc		Comp. Ratio limited to 11.0:1, Valve lift limited to .450".
Sunbeam Alpine I, II, III, IV, V, & Harrington LeMans	13 x 6	4	(F) 10.0 Disc (R) 9.0 Drum		Laycock overdrive (0.803)
Suzuki Swift GT & GTi	15 x 7	5	(F) 248 Disc (R) 237 Disc		"Dual Y" manifold required, no plenum or balance tubes.
Toyota Corolla 2TC (71-74)	15 x 7	4 or 5	(F) 229 Disc (R) 231 Drum	(F) 10.0 Solid Disc Rotors and Calipers from 73 Corona	
Toyota MR-2 1.6L (85-89)	15 x 7	5	Factory spec @ all 4 wheels		*Comp. Ratio limited to 11:1*, Valve lift limited to .400". Trunk mounted fuel cell with no larger capacity than stock is permitted. Can use stock fuel tank.
Triumph TR2/3/4	15 x 7	4	(F) 279 (11.0) Disc (R) 229 (9.0) Drum	(F) Calipers & discs from TR-6 (std. or alt.) (R) 254 (10.0) Drum Drum may be 9" or 10" and of alfin or steel.	Front apron assembly may be made of alternate material. Laycock overdrive may use 5 speed gearbox without overdrive.
Triumph Spitfire Mk.III	13 x 6	4	(F) 9.0 Disc (R) 7.0 Drum	(F) 9.7 Disc (R) 8.0 Drum May use Triumph GT6 caliper as alternate front caliper.	Laycock "D" (0.802). NOTE: Roll cage for cars under 1500 lbs are acceptable for cars registered with SCCA before 4/1/82.
Triumph Spitfire Mk. IV & 1500	13 X 6	4	(F) 9.0 Disc (R) 7.0 Drum	(F) 9.7 Disc (R) 8.0 Drum May use Triumph GT6 caliper as alternate front caliper.	Parts may not be interchanged between two engine units, Laycock "D" (0.802). 1493cc may use (2) 1.25" SU carbs on 1296cc. manifold @ 1830 lbs. NOTE: Roll cage for cars under 1500 lbs are acceptable for cars registered with SCCA before 4/1/82.
Turner 1500	13 x 6	4	(F) 9.0 Disc (R) 8.5 Drum	(F) 9.7 Disc (Spitfire)	Hobbs mech-a-matic gearbox ratios: 1=3.78, 2=2.32, 3=1.46, 4=4.00. 125E crankshaft
Volkswagen Golf 1.8 (85-92)	15 x 7	5	(F) 239 (9.4) Disc (R) 180 x 30 (7.1 x 1.2) Drum	(F) 239 (9.4) Vented Disc (R) 239 (9.4) Disc	Original carbureted manifold or alternate manifold is permitted. VW cyl. head #026103351BF or #026103265HX permitted. Can use stock fuel tank if stock rear bumper and bumper support structure is retained.

FP	Prep. Level	Weight (lbs)	Engine Type	Bore x Stroke mm/(in.)	Displ. cc/ (ci) *(nominal)*	Block Mat'l	Head/PN & Mat'l	Valves IN & EX mm/ (in.)	Carb. No. & Type	Wheel-base mm/(in.)	Track (F/R) mm/ (in.)
Volkswagen Golf III (93-98)	2	1995 * 2045 ** 2095	4 Cyl SOHC	82.5 x 92.8	1984	Iron	Alum	(I) 39.5 (E) 32.9	Fuel Injection	97.3	62.4 / 61.7
Volkswagen Jetta (includes GLI) (82-84)	1	1920	4 Cyl SOHC	79.5 x 86.4 (3.13x3.40) 81.0 x 86.4 (3.19x3.40)	1715 (104.6) 1780 (108.6)	Iron	Alum	1715: (I) 34.0 / (1.34) (E) 31.0/(1.22) 1780: (I) 40.0 / (1.57) (E) 33.0/(1.30)	(1) 40 DCN, DCNF, IDF w/ 38mm choke(s), (2) Auto-type sidedraft w/ 34mm choke(s) on I.R. manifold, or fuel injection.	2400 (94.5)	58.9 / 57.2
Volkswagen Jetta 1.8 (85-92)	1	1950	4 Cyl SOHC	81.0 x 86.4	1780	Iron	Alum	(I) 40.0 (E) 33.0	(1) 40 DCN, DCNF, IDF w/ 36mm choke(s), (2) Auto-type sidedraft w/ 32mm choke(s) on I.R. manifold, or fuel injection.	2472	60.5 / 60.2
Volkswagen Rabbit 1457/1471 (includes Cabrio-let/Convertible	1	1520	4 Cyl SOHC	76.5 x 80.0 79.5 x 73.4	1471 1457	Iron	Alum	(I) 40.0 (I) 34.0 (E) 33.0 (E) 31.0	(1) 40 DCN, DCNF, IDF w/ 32mm choke(s), or fuel injection.	94.5	58.9 / 57.2
Volkswagen Rabbit 1588 (includes Cabrio-let /Convertible	1	1663	4 Cyl SOHC	79.5 x 80.0	1588	Iron	Alum	(I) 34.0 (I) 40.0 (E) 31.0 (E) 33.0	(1) 40 DCN, DCNF, IDF w/ 34mm choke(s), or (2) auto type side draft w/ 34mm choke(s) on I.R. manifold, or fuel injection, alternate throttle body w/ 1.381 primary and 2.051 secondary allowed.	94.5	58.9 / 57.2
Volkswagen Rabbit (includes Convertible) 1715 / 1780	1	1853	4 Cyl SOHC	79.5 x 86.4 (3.13x3.40) 81.0 x 86.4 (3.19x3.40)	1715 (104.6) 1780 (108.6)	Iron	Alum	see Jetta	(1) 40 DCN, DCNF, IDF w/ 38mm choke(s). (2) Auto-type sidedraft w/34mm choke(s) on I.R. manifold, or fuel injection.	2400 (94.5)	58.9 / 57.2
Volkswagen Scirocco 1457/1471	1	1520	4 Cyl SOHC	76.5 x 80.0 79.5 x 73.4	1471 1457	Iron	Alum	(I) 40.0 (I) 34.0 (E) 33.0 (E) 31.0	(1) 40 DCN, DCNF, IDF w/ 32mm choke(s), or fuel injection.	94.5	58.9 / 57.2
Volkswagen Scirocco 1588	1	1663	4 Cyl SOHC	79.5 x 80.0	1588	Iron	Alum	(I) 40.0 (E) 33.0	(1) 40 DCN, DCNF, IDF w/ 32mm choke(s), or (2) auto type side draft w/ 34mm choke(s) on I.R. manifold, or fuel injection, alternate throttle body w/ 1.381 primary and 2.051 secondary allowed.	94.5	58.9 / 57.2

FP	Wheels (max)	Trans. Speeds	Brakes Std. (mm/(in.))	Brakes Alt.: mm/(in.)	Notes:
Volkswagen Golf III (93-98)	15 x 7	5	(F) 257 Disc (R) 227 DIsc		Comp. Ratio limited to 10.5:1 Valve lift limited to .450".
Volkswagen Jetta (includes GLI) (82-84)	15 x 7	5	(F) 239 (9.4) Disc (R) 180 x 30 (7.1 x 1.2) Drum	(F) 239 (9.4) Vented Disc	Intake manifold unrestricted w/ single downdraft carburetor. VW cyl. head #026103351BF or #026103265HX permitted.
Volkswagen Jetta 1.8 (85-92)	15 x 7	5	(F) 239 Disc (R) 180 x 30 Drum	(F) 239 Vented Disc (R) 239 Disc	Original carbureted manifold or alternate manifold is permitted. VW cyl. head #026103351BF or #026103265HX permitted. Can use stock fuel tank if stock rear bumper and bumper support structure is retained.
Volkswagen Rabbit 1457/1471 (includes Cabrio-let/Convertible	13 x 7	4 or 5	(F) 9.41 Disc (R) 7.86 x 1.57 Drum		Factory roll bar must be removed on Cabriolet. Intake manifold unrestricted with single down draft carburetor. Only 1457cc engine may use fuel injection.
Volkswagen Rabbit 1588 (includes Cabrio-let /Convertible	13 x 7	4 or 5	(F) 9.41 Disc (R) 7.1 x 1.57 Drum		Intake manifold unrestricted with single down draft carburetor.
Volkswagen Rabbit (includes Convertible) 1715 / 1780	15 x 7	5	(F) 239 (9.4) Disc (R) 180 x 30 (7.1 x 1.2) Drum	(F) 239 (9.4) Vented Disc	Intake manifold unrestricted w/ single downdraft carburetor.
Volkswagen Scirocco 1457/1471	13 x 7	4 or 5	(F) 9.41 Disc (R) 7.1 x 1.19 Drum	Front calipers from 1980 Scirocco/Rabbit.	Intake manifold unrestricted with single down draft carburetor. Only 1457cc engine may use fuel injection.
Volkswagen Scirocco 1588	13 x 7	4 or 5	(F) 9.41 Disc (R) 7.1 x 1.19 Drum		Intake manifold unrestricted with single down draft carburetor.

FP	Prep. Level	Weight (lbs)	Engine Type	Bore x Stroke mm/(in.)	Displ. cc/ (ci) *(nominal)*	Block Mat'l	Head/PN & Mat'l	Valves IN & EX mm/ (in.)	Carb. No. & Type	Wheel-base mm/(in.)	Track (F/R) mm/ (in.)
Volkswagen Scirocco 1715 / 1780	1	1853	4 Cyl SOHC	79.5 x 86.4 (3.13x3.40) 81.0 x 86.4 (3.19x3.40)	1715 (104.6) 1780 (108.6)	Iron	Alum	see Jetta	(1) 40 DCN, DCNF, IDF w/ 38mm choke(s). (2) Auto-type sidedraft w/34mm choke(s) on I.R. manifold, or fuel injection.	2400 (94.5)	58.9 / 57.2
Volvo P-1800/ E/S /1800ES Sports Coupe	1	1995	4 Cyl OHV	3.31 x 3.15 3.50 x 3.15	1780 1982	Iron	Iron	(I) 1.57 / 1.65 / 1.73 (E) 1.38	(2) 1.75" SU, (2) 1.75" CDSE Stromberg, (2) 1.75" SU HS6 or fuel injection.	96.5	55.4 / 55.4
Volvo 142 / 142E	1	2050	4 Cyl OHV	88.9 x 80.0 (3.50x3.15)	1986 (121.1)	Iron	Iron	(I) 44.0 / (1.73) (E) 35.0/(1.38)	(2) Auto-type sidedraft w/ 32mm choke(s) on I.R. manifold, or fuel injection.	2616 (103.0)	1415/1415 (55.7/55.7)

* Alternate transmission w/ stock type syncros
** Alternate transmission w/ non-stock type syncros (i.e. dog-ring)

FP	Wheels (max)	Trans. Speeds	Brakes Std. (mm/(in.))	Brakes Alt.: mm/(in.)	Notes:
Volkswagen Scirocco 1715 / 1780	15 x 7	5	(F) 239 (9.4) Disc (R) 180 x 30 (7.1 x 1.2) Drum	(F) 239 (9.4) Vented Disc	Intake manifold unrestricted w/ single downdraft carburetor.
Volvo P-1800/ E/S /1800ES Sports Coupe	15 x 7	4	(F) 11.0 Disc (R) 9.0 Drum	(F) 10.7 Disc (R) 11.6 Disc	Allow B20-E engine assembly
Volvo 142 / 142E	15 x 7	5	(F) 272 (10.7) Disc (R) 295 (11.6) Disc		Bosch Fuel Injection

HP	Prep. Level	Weight (lbs)	Engine Type	Bore x Stroke mm/(in.)	Displ. cc/ (ci) *(nominal)*	Block Mat'l	Head/PN & Mat'l	Valves IN & EX mm/ (in.)	Carb. No. & Type	Wheelbase mm/(in.)	Track (F/R) mm/ (in.)
Alfa Romeo Giulietta Sprint & Spider, 750 & 101, Normale (Spider) & Veloce (Super Spider)	1	*2180*	4 Cyl SOHC	2.91 x 2.95	1290	Alum	Alum	(I)1.46 (E)1.34	(2) auto type 30mm side-drafts 2030 with downdraft solex	Sprint: 93.7 750 Spider: 86.6 101 Spider: 88.6	54.5 / 53.5
Austin-Healey Sprite Mk I,II, III, IV MG MIdget Mk I, II, III, IV (948)	1	*1500*	4 Cyl OHV	2.48 x 3.00	948	Iron	Iron 2A629 12A185 12G202	(I) 1.00 (E) 1.00 (I) 1.16	(2) 1.25" SU or Stromberg	80.0	50.2 / 48.7
Austin-Healey Sprite Mk I, II, III, IV MG Midget Mk I, II, III, IV & 1500	1/2 See Notes	1680	4 Cyl OHV	2.78 x 3.20	1275	Iron	Iron	(I) 1.31 (E) 1.16	(2) 1.25" SU w/ no modifications	80.0	50.2 / 48.7
Austin-Healey Sprite Mk I, II, III, IV MG Midget (ALL) (1275)	2	1550, *1590, **1630	4 Cyl OHV	2.78 x 3.20	1275	Iron	Iron	(I) 1.31 (E) 1.16	(2) 1.25" SU w/ no modifications	80.0	50.2 / 48.7
Austin-Healey Sprite Mk I, II, III, IV MG Midget (ALL) (1098)	2	1425 * 1461 ** 1496	4 Cyl OHV	2.54 x 3.30	1098	Iron	Iron	(I) 1.22 (E) 1.00	(2) 1.25" SU w/ no modifications	80.0	50.2 / 48.7
Austin-Healey Sprite Mk.I, II, III, IV MG Midget Mk.I, II, III, IV, Midget 1500	1	1740	4 Cyl OHV	2.54 x 3.30	1098	Iron	Iron	(I) 1.31 (E) 1.16	(2) 1.25" SU or Stromberg, (2) 1.50" SU or Stromberg, (2) 1.25" SU or Stromberg w/ 34mm throttle plates on original intake manifold, maximum spacer block (isolator) length of 1.25".	80.0	50.2 / 48.7
BLMI Austin/ Morris Mini-Cooper 1275	2	1415 * 1450 ** 1486	4 Cyl OHV	2.78 x 3.20	1275	Iron	Iron	(I) 1.406 (E) 1.219	(1) 1.75" SU side draft (2) 1.25" SU side drafts	80.2	53.0 / 53.0

HP	Wheels (max)	Trans. Speeds	Brakes Std. (mm/(in.))	Brakes Alt.: mm/(in.)	Notes:
Alfa Romeo Giulietta Sprint & Spider, 750 & 101, Normale (Spider) & Veloce (Super Spider)	15 x 6	4 or 5	(F)10.3 Drum (R)10.0 Drum	(F) 10.6 Disc (girling), (R) 10.5 Drum, (F) 10.7 Disc	Sebring headrest.
Austin-Healey Sprite Mk I,II, III, IV MG MIdget Mk I, II, III, IV (948)	13 x 6	4	(F&R) 7.0 Drum	(F) 8.2 Disc (F) 9.12 Disc #208715, calipers: #27H, 27H-4651 (R) RH BTA 566, LH BTA567 backing plates (R) GWC1102 wheel cyls	Mk.III transmission case permitted. Battery tray may be removed. Mk.I Body modification: Behind drivers seat rear deck only, width of shoulder or seat, depth 6" max.
Austin-Healey Sprite Mk. I, II, III, IV MG Midget Mk I, II, III, IV & 1500	13 x 6	4	(F) 8.2 Disc (R) 7.0 Drum	(F) 9.12 Disc #208715, calipers: #27H, 27H-4651	Comp. Ratio limited to 11.0:1, Valve lift limited to .450". Drivetrain Level 2 preparation only. Listed spec line weight does not change with alternate or stock transmission. Battery tray may be removed.
Austin-Healey Sprite Mk. I, II, III, IV MG Midget (ALL) (1275)	13 x 6	4	Factory Spec @ all 4 wheels	(F) 9.12 Disc #208715, calipers: #27H, 27H-4651	Comp. Ratio limited to 11.0:1, Valve lift limited to .450".
Austin-Healey Sprite Mk.I, II, III, IV MG Midget (ALL) (1098)	13 x 6	4	Factory Spec @ all 4 wheels	(F) 9.12 Disc #208715, calipers: #27H, 27H-4651	Comp. Ratio limited to 11.0:1, Valve lift limited to .450".
Austin-Healey Sprite Mk.I, II, III, IV MG Midget Mk.I, II, III, IV, Midget 1500	13 x 6	4	(F) 8.2 Disc (R) 7.0 Drum	(F) 9.12 Disc #208715, Calipers: #27H, 27H-4651	Battery tray may be removed. Alt. crankshaft: Ferrous material, stock configuration & journal dimensions (no hollow core), max. undersize is 0.040". NOTE: Roll cage for cars under 1500 lbs are acceptable for cars registered with SCCA before 04/01/82.
BLMI Austin/ Morris Mini-Cooper 1275	13 x 7	4	Factory Spec @ all 4 wheels		Comp. Ratio limited to 11.0:1, Valve lift limited to .450". Alternate intake manifold (#CAM-6618).

HP	Prep. Level	Weight (lbs)	Engine Type	Bore x Stroke mm/(in.)	Displ. cc/ (ci) *(nominal)*	Block Mat'l	Head/PN & Mat'l	Valves IN & EX mm/ (in.)	Carb. No. & Type	Wheelbase mm/(in.)	Track (F/R) mm/ (in.)
BLMI Austin/ Morris Mini Cooper	1/2 See Notes	1600	4 Cyl OHV	2.78 x 3.20	1275	Iron	Iron	(I) 1.31 (I) 1.406 (E) 1.16 (E) 1.219	(2) 1.25" SU w/ no modifications, (1) 1.75" SU	80.2	53.0 / 53.0
BMW 1600 (68-71)	2	1950 * 1999 ** 2048	4 Cyl OHV	84.0 x 71.0	1574	Iron	Alum	(I) 42.0 (E) 35.0	Carburetion	98.4	56.5 / 56.5
Fiat 124 Spider, Sport Coupe & Coupe (95.3 wheelbase only)	1	2250	4 Cyl DOHC	3.15 x 2.81	1438	Iron	Alum	(I) 1.64 (E) 1.43	(1) Weber 34 DFH-1, Weber 34 DMSA-1, or 34 DMS 201.	89.9	56.7 / 55.4
Fiat 124 Sport Coupe & Spider (2281 wheelbase only)	2	2055 * 2106 ** 2158	4 Cyl DOHC	80.0 x 79.3 80.0 x 80.0	1592 1608	Alum	Alum	(I) 41.7 (E) 36.3	(1) 40 DCNF w/ 32mm choke(s) req'd.	2281 or 2421	1441/1408
Fiat Spider & Racer (-1973)	*1*	*1477*	*4 Cyl. OHV*	*2.56 x 2.50 2.56 x 2.68*	*843 903*	*Iron*	*Alum*	*(I) 1.146 (E) 1.063*	*(1) 30 DICA, (1)Weber 4226434 (30/30), (1) 34 DMSA, (1) 32/36 DG Series*	*79.8*	*49.5 / 51.*
Fiat X-1/9 & Bertone 1500	2	1900 * 1948 ** 1995	4 Cyl SOHC	3.40 x 2.52	1498	Iron	Alum	(I) 1.43 (E) 1.31	(1) 32 DTMR or 32 DATRA, or fuel injection. (1) 40 DCNF w/ 32mm choke(s) req'd.	86.7	56.3 / 56.6
Fiat X-1/9 1300	2	1725 * 1768 ** 1811	4 Cyl SOHC	86.0 x 55.5	1290	Iron	Alum	(I) 1.43 (E) 1.23	(1) 32 DTMR or 32 DATRA. (1) 40 DCNF w/ 32mm choke(s) req'd.	86.7	56.3 / 56.6
Fiat X-1/9 1300	1	2115	4 Cyl SOHC	86.0 x 55.5	1290	Iron	Alum	(I) 1.43 (E) 1.23 (E) 1.21	(1) Weber 32 DMTR w/ 32mm primary & secondary throttle bores, (1) 32 DATRA/100 w/ 32mm primary & secondary throttle bores, (1) 40 DCNF w/ 32mm choke(s).	86.7	56.3 / 56.6
Fiat X-1/9 1500	1/2 See Notes	2070	4 Cyl SOHC	3.40 x 2.52	1498	Iron	Alum	(I) 1.43 (E) 1.31	(1) 40 DCNF w/ 32mm choke(s), (1) 32 DTMR or 32 DATRA, or fuel injection	86.7	56.3 / 56.6
Ford Escort / Mercury Lynx (81-84)	1	2190	4 Cyl SOHC	3.15 x 3.13	1589	Iron	Alum	(I) 42.0 (E) 37.0	(1) 40 DCN, DCNF, IDF w/ 32mmchoke(s), (2) auto type side draft w/ 28mm choke(s) on I.R. manifold	94.3	58.2 / 59.5

HP	Wheels (max)	Trans. Speeds	Brakes Std. (mm/(in.))	Brakes Alt.: mm/(in.)	Notes:
BLMI Austin/ Morris Mini Cooper	13 x 6	4	(F) 8.4 Disc (R) 7.0 Drum		Comp. Ratio limited to 11.0:1, Valve lift limited to .450". Drivetrain Level 2 preparation only. Listed spec line weight does not change with alternate or stock transmission. Battery tray may be removed. Alternate intake manifold #CAM-6618.
BMW 1600 (68-71)	13 x 7	4	(F) 257 Disc (R) 232 Drum		Comp. Ratio limited to 11.0:1, Valve lift limited to .450". Factory 2bbl intake manifold from 2002 is permitted. (2) 40 DCOE sidedraft carbs w/ *32mm* choke(s) permitted @ 2050 *2102 **2153. *Alternate differential from 75-83 e21 allowed.*
Fiat 124 Spider, Sport Coupe & Coupe (95.3 wheelbase only)	13 x 6.5	5	(F & R) 8.94 DIsc	(F & R) 10.0 x .40 Disc (Lancia) Alt. rotor: #82346805.	
Fiat 124 Sport Coupe & Spider (2281 wheelbase only)	13 x 6.5	5	Factory Spec @ all 4 wheels		Comp. Ratio limited to 11.0:1, Valve lift limited to .425".
Fiat Spider & Racer (-1973)	*13 x 6.5*	*4*	*(F) 8.9 Disc (R) 7.3 Drum*	*9.25 Disc Girling Calipers 82346805*	*Aux. radiator mounted behind front spoiler w/ no mods to original bodywork. PBS 8-Port head (part # 850-8-P), Valves: (I) 31.0mm, (E) 27.0mm, Intake manifold (Part #850-8-PM) is required with alternate head. Carburetion (2) 40 DCOE w/ 28mm chokes, weight: 1527 lb. Alternate steering box or rack & pinion steering permitted. Fuel cell may be located in front trunk. Valve cover (Scuderia # 01-11) permitted for PBS head.*
Fiat X-1/9 & Bertone 1500	13 x 6	5	Factory Spec @ all 4 wheels		Comp. Ratio limited to 11.0:1, Valve lift limited to .450". Fuel cell may be located in front trunk.
Fiat X-1/9 1300	13 x 6	4	Factory Spec @ all 4 wheels		Comp. Ratio limited to 11.0:1, Valve lift limited to .450". Fuel cell may be located in front trunk.
Fiat X-1/9 1300	13 x 6	4	(F & R) 8.94 Disc	(F & R) 10.0 x .40 Disc (Lancia)	5 speed transmission from new "FP" model. Top panels may remain in place if securely bolted or pinned. Alt. Crankshaft: #4292177. Engine hatch rain tray may be removed. Trunk mounted fuel cell allowed. Orientation of the alternate carburetor is unrestricted. The alternate carb adapter may not be thicker than 1.25 inches. The adapter may have a bore larger than the throttle bore of the approved alternate carburetor.
Fiat X-1/9 1500	13 x 6	5	(F&R) 227 Disc		Comp. Ratio limited to 11.0:1, Valve lift limited to .450". Drive train Level 2 preparation only. Listed spec line weight does not change with alternate or stock transmission. Fuel cell may be located in front trunk.
Ford Escort / Mercury Lynx (81-84)	13 x 7	4	(F) 9.3 Disc (R) 8.0 x 1.3 Drum		

HP	Prep. Level	Weight (lbs)	Engine Type	Bore x Stroke mm/(in.)	Displ. cc/ (ci) *(nominal)*	Block Mat'l	Head/PN & Mat'l	Valves IN & EX mm/ (in.)	Carb. No. & Type	Wheelbase mm/(in.)	Track (F/R) mm/ (in.)
Ford EXP (81-84)	1	2190	4 Cyl SOHC	3.15 x 3.13	1589	Iron	Alum	(I) 42.0 (E) 37.0	(1) 40 DCN, DCNF, IDF w/ 32mmchoke(s), (2) auto type side draft w/ 28mm choke(s) on I.R. manifold	94.3	58.2 / 59.5
Ford Fiesta (78-80)	2	1775 * 1819 ** 1864	4 Cyl OHV	81.0 x 78.0	1598	Iron	Iron	(I) 1.41 (E) 1.24	(1) 40 DCN, DNCF, IDF w/32mm chokes. (2) automotive side draft w/30mm chokes @ 75 lbs. penalty.	90.0	56.0 / 55.5
Ford Festiva (88-93)	2	1700 * 1743 ** 1785	4 Cyl SOHC	2.79 x 3.29	1324	Iron	Alum	(I) 32.0 (E) 28.0	Fuel injection or Carburetion.	90.2	60.1 / 59.5
Honda Civic	1	1920	4 Cyl OHV	72.0 x 76.0	1237	Iron	Alum	EB 1&2 (I) 34.0 (E) 30.0 EB 3 (I) 36.0 (E)32.0	(1) 40 DCN, DCNF, IDF w/ 25mm choke(s)	86.8	53.7 / 52.9
Honda Civic/Si (84-87)	2	1850 * 1896 ** 1943	4 Cyl SOHC	74.0 x 86.5	1488	Alum	Alum	(I) 27.1 (E) 33.1	Fuel injection or Carburetion.	93.7	58.8 / 59.1
Honda Civic 1.5 (88-91)	2	2000 * 2050 ** 2100	4 Cyl SOHC	75.0 x 84.5	1493	Alum	Alum	(I) 29.1 (E) 25.1	Fuel injection	98.4	59.8 / 60.0
Honda CRX/Si (84-87)	2	1850 * 1896 ** 1943	4 Cyl SOHC	74.0 x 86.5	1488	Alum	Alum	(I) 27.1 (E) 33.1	Fuel injection or Carburetion.	86.6	58.5 / 59.1
Honda CRX 1.5 (88-91)	2	*2175 *2229 **2284*	4 Cyl SOHC	75.0 x 84.5	1493	Alum	Alum	(I) 29.1 (E) 25.1	Fuel injection	90.6	59.8 / 60.0
Honda Fit (07-08)	2	1900 * 1948 ** 1995	4 Cyl SOHC	73.0 x 89.4	1497	Alum	Alum	(I) 27.65 (E) 23.15	Fuel Injection	96.5	61.5 / 61.3
Lotus 7 & 7 America	1	997cc: 1550 *948cc: 1450 *1487 **1523*	4 Cyl OHV	3.19 x 1.91 2.48 x 3.00	997 948	Iron	Iron	(I) 1.30 / 1.16 (E) 1.20 / 1.00	997cc: Two (2) 1.25" SU, 948cc: Two (2) 1.25" or 1.125" SU or Stromberg	88.0	50.9 / 52.0

HP	Wheels (max)	Trans. Speeds	Brakes Std. (mm/(in.))	Brakes Alt.: mm/(in.)	Notes:
Ford EXP (81-84)	13 x 7	4	(F) 9.3 Disc (R) 8.0 x 1.3 Drum		
Ford Fiesta (78-80)	13 x 7	4	(F) 8.7 Disc (R) 7.0 Drum		Comp. Ratio limited to 11.0:1, Valve lift limited to .450".
Ford Festiva (88-93)	13 x 7	4 or 5	(F) 8.62 Solid Disc (R) 6.69 Drum		Comp Ratio limited to 10.5:1. Valve lift limited to .450".
Honda Civic	13 x 6	4 or 5	(F) 9.0 Disc (R) 7.0 x 1.4 Drum	Brake Calipers: RF #45210-663-674 LF #45230-663-674	Orientation of the alternate carburetor is unrestricted. The alternate carburetor adaptor may not be thicker than 1.25". The adaptor may have a bore larger than the throttle bore of the approved alternate carburetor.
Honda Civic/Si (84-87)	13 x 6	5	(F) 231 Disc (R) 180 Drum		Comp. Ratio limited to 11.0:1, Valve lift limited to .390".
Honda Civic 1.5 (88-91)	13 x 6	5	(F) 231 Disc (R) 180 Drum		Comp. Ratio limited to 11.0:1, Valve lift limited to .390".
Honda CRX/Si (84-87)	13 x 6	5	(F) 231 Disc (R) 180 Drum		Comp. Ratio limited to 11.0:1, Valve lift limited to .390".
Honda CRX 1.5 (88-91)	13 x 6	5	(F) 231 Disc (R) 180 Drum		Comp. Ratio limited to 11.0:1, Valve lift limited to .390".
Honda Fit (07-08)	15 x 7	5	(F) 261.6 Vented Disc (R) 200.7 Drum		Comp. Ratio limited to 11.0:1, Valve lift limited to .390".
Lotus 7 & 7 America	13 x 6	4	(F) 8.0 Drum (R) 7.0 Drum	COA-B405/6 front 9.0 disc brake kit	Front track w/alternate front brakes : 51.8", Authorized frame modification: Info. Available from SCCA. BMC Mk. III transmission case w/948cc. Headlights and associated hardware may be removed. Manifold unrestricted for 2 SU carbs. Wood floorboards may be replaced with metal. rear edge of the front fenders is to be 4.5" above the body undertray.

HP	Prep. Level	Weight (lbs)	Engine Type	Bore x Stroke mm/(in.)	Displ. cc/ (ci) *(nominal)*	Block Mat'l	Head/PN & Mat'l	Valves IN & EX mm/ (in.)	Carb. No. & Type	Wheelbase mm/(in.)	Track (F/R) mm/ (in.)
Mazda GLC (FWD)	1	2075	4 Cyl SOHC	77.0 x 80.0	1490	Iron	Alum	(I) 36.0 (E) 31.0	(1) 40 DCN, DCNF, IDF w/ 32mm choke(s)	93.1	58.2 / 58.4
MGB & MGB-GT	2	2100 * 2153 ** 2205	4 Cyl OHV	3.16 x 3.50	1798	Iron	Iron	(I) 1.63 (E) 1.35	(2) 1.50" SU	91.0	53.0 / 53.2
Mini Cooper (02-06)	2	2080 * 2132 ** 2184	4 Cyl SOHC	77.0 x 85.8	1598	Iron	Alum	(I) 30.3 (E) 23.3	Fuel injection	97.1	61.6 / 61.9
Nissan/Datsun 1200	1	1660	4 Cyl OHV	73.0 x 76.0	1171	Iron	Alum	(I) 35.0 (E) 29.0	(1) 40 DCN, DCNF, IDF, 26mm choke(s) req'd.	90.6	53.5 / 51.5
Nissan/Datsun 210 (79-82)	2	1850 * 1896 ** 1943	4 Cyl OHV	76.0 x 77.0 76.0 x 82.0	1397 1488	Iron	Alum	(I) 37.2 (E) 30.0 (I) 35.0 (E) 30.0	(1) 40 DCNF, DCN, IDF w/ 28mm choke(s)	92.1	56.0 / 54.7
Nissan/Datsum 210 1.4	1	2050	4 Cyl OHV	76.0 x 77.0	1397	Iron	Alum	(I) 37.2 (E) 30.0	(1) 40 DCN, DCNF, IDF w/ 30mm choke(s), (2) auto type side draft w/ 30mm choke(s) on I.R. manifold.	92.1	56.0 / 54.7
Nissan/Datsun B-210 1.4	1	2050	4 Cyl OHV	76.0 x 77.0	1397	Iron	Alum	(I) 37.2 (E) 30.0	(1) 40 DCN, DCNF, IDF w/ 30mm choke(s), (2) auto type side draft w/ 30mm choke(s) on I.R. manifold.	92.1	52.7 / 51.5
Nissan/Datsun PL510	2	1960 * 2009 ** 2058	4 Cyl SOHC	83.0 x 73.7	1595	Iron	Alum	(I) 41.9 (E) 33.0	(1) 40 DCN or DCNF. 32mm choke(s) req'd. or (1) 36mm DCNVH.	95.3	54.5 / 54.5
Opel GT	1	1595	4 Cyl OHV	2.95 x 2.40	1078	Iron		(I) 1.26 (E) 1.06	(2) Solex 35 PDSI-2	95.7	53.0 / 54.0
Porsche 914-4 (1.8L)	2	2150 * 2204 ** 2258	4 Cyl OHV	93.0 x 66.0	1795	Alum	Alum	(I) 40.9 (E) 34.0	Fuel injection	96.5	56.5 / 58.1
Renault Alliance 1.4	1	1935	4 Cyl OHV	76.0 x 77.0	1397	Iron	Alum	(I) 34.2 (E) 30.3	(1) 40 DCN, DCNF, IDF w / 32mm choke(s), or Weber 32 mm drt down draft carb or fuel injection	97.8	57.7 / 55.3
Renault Alliance / Encore 1.7 (84-87)	2	1800 * 1845 ** 1890	4 Cyl SOHC	81.0 x 83.5	1721	Iron	Alum	(I) 38.1 (E) 32.5	Fuel injection	97.8	58.7 / 56.3

HP	Wheels (max)	Trans. Speeds	Brakes Std. (mm/(in.))	Brakes Alt.: mm/(in.)	Notes:
Mazda GLC (FWD)	13 x 7	5	(F) 8.9 Disc (R) 7.1 x 1.2 Drum		Orientation of the alternate carburetor is unrestricted.
MGB & MGB-GT	15 x 7	4	(F) 273 Disc (R) 254 Drum		Comp. Ratio limited to 11.0:1, Valve lift limited to .450".
Mini Cooper (02-06)	15 x 7	5	(F) 276 Vented Disc (R) 239 Solid Disc		Comp. Ratio limited to 10.6:1, Valve lift limited to .450".
Nissan/Datsun 1200	13 x 6	4	(F) 8.37 Disc (R) 8.0 x 1.38 Drum		Alternate differential assy: H165 The alternate carburetor adaptor may not be thicker than 1.25 inches. The adaptor may have a bore larger than the throttle bore of the approved alternate carburetr.
Nissan/Datsun 210 (79-82)	13 x 6	4 or 5	Factory Spec @ all 4 wheels		Comp. Ratio limited to 10.5:1, Valve lift limited to .450". Alternate differential assembly: H165.
Nissan/Datsum 210 1.4	13 x 7	4 or 5	(F) 9.65 Disc (R) 8.0 x 1.38 Drum	(F) 254 Vented Disc (R) 270 Solid Disc Discs and calipers from 80-83 200SX	Alternate differential assembly: H165, H190.
Nissan/Datsun B-210 1.4	13 x 7	4 or 5	(F) 9.65 Disc (R) 8.0 x 1.38 Drum		Alternate differential assembly: H165, H190.
Nissan/Datsun PL510	13 x 7	4	Factory Spec @ all 4 wheels		Comp. Ratio limited to 12.0:1, Valve lift limited to .450". (2) auto type side drafts w/ 32mm choke(s) allowed @ 2050 (*2101 **2153).
Opel GT	13 x 6.5	4	(F) 9.37 Disc (R) 7.87 Drum	(F) 9.6 Disc #90000182 (R) 9.6 Disc 9280751 Calipers (L) 90000183 (R) 90000184	
Porsche 914-4 (1.8L)	15 x 7	5	(F) 280 Disc (R) 282 Disc		Comp. Ratio limited to 10.5:1, Valve lift limited to .420". Cylinder barrels of alternate material are permitted.
Renault Alliance 1.4	13 x 7	5	(F) Disc (R) Drum		
Renault Alliance / Encore 1.7 (84-87)	15 x 7	5	Factory Spec @ all 4 wheels		Comp. Ratio limited to 10.5:1, Valve lift limited to .450".

HP	Prep. Level	Weight (lbs)	Engine Type	Bore x Stroke mm/(in.)	Displ. cc/ (ci) *(nominal)*	Block Mat'l	Head/PN & Mat'l	Valves IN & EX mm/ (in.)	Carb. No. & Type	Wheelbase mm/(in.)	Track (F/R) mm/ (in.)
Renault LeCar/R5 (76-82)	1	1990	4 Cyl OHV	76.0 x 77.0	1397	Iron	Alum	(I) 34.2 (E) 30.3	(1) 40 DCN, DCNF, IDF w / 32mm choke(s)	(L) 2433 (R) 2402	52.7 / 51.8
Suzuki Swift GA 1.3L (89-94)	2	1600 * 1640 ** 1680	4 Cyl SOHC	74.0 x 75.5	1298	Alum	Alum	(I) 36.0 (E) 30.0	Fuel injection	2265	58.4 / 57.4
Toyota Corolla (71-74)	2	1960 * 2009 ** 2058	4 Cyl OHV	85.0 x 70.0	1588	Iron	Alum	(I) 41.0 (E) 36.0	Carburetion	91.9	54.5 / 55.5
Toyota Yaris (06-09)	2	1900 *1948 **1995	4 Cyl DOHC	74.9 x 84.6	1496	Alum	Alum	(I) 30.5 (E) 25.5	Fuel Injection	2462	*62.1/61.7*
Triumph Spitfire Mk. I & II	1	*1780*	4 Cyl OHV	2.73 x 3.00	1147	Iron	Iron	(I) 1.30 (E) 1.15	(2) 1.25" SU or Stromberg	83.0	52.6 / 51.5
Triumph Spitfire	2	1665 * 1707 ** 1748	4 Cyl OHV	2.90x2.992	1296	Iron	Iron	(I) 1.30 (E) 1.17	Carburetion	83.0	53.6 / 52.6
Triumph Spitfire 1500	2	1665 * 1707 ** 1748	4 Cyl OHV	2.90 x 3.44	1493	Iron	Iron	(I) 1.44 (E) 1.17	Carburetion	83.0	53.6 / 54.6
Triumph Spitfire	1/2 See Notes	1810	4 Cyl OHV	2.90x2.992	1296	Iron	Iron	(I) 1.30 (E) 1.17	Carburetion	83.0	53.6 / 52.6
Volkswagen Golf (GTI, GT, GL)	2	2065 * 2117 ** 2168	4 Cyl SOHC	81.0 x 86.4	1780	Iron	Alum	(I) 40.0 (E) 33.0	Fuel injection	97.3	60.5 / 60.2
Volkswagen Jetta 1780 (85-91)	2	2065 * 2117 ** 2168	4 Cyl SOHC	81.0 x 86.4	1780	Iron	Alum	(I) 40.0 (E) 33.0	Fuel injection	97.3	60.5 / 60.2
Volkswagen Rabbit Cabriolet 1780	2	2065 *2117 **2168	4 Cyl OHV	81.0 x 86.4	1780	Iron	Alum	(I) 40.0 (E) 33.0	Fuel Injection	2401	58.9/57.2

HP	Wheels (max)	Trans. Speeds	Brakes Std. (mm/(in.))	Brakes Alt.: mm/(in.)	Notes:
Renault LeCar/R5 (76-82)	13 x 6	4	(F) 228 Disc (R) 180 Drum		
Suzuki Swift GA 1.3L (89-94)	13 x 7	5	Factory Spec @ all 4 wheels		Comp. Ratio limited to 11.0:1, Valve lift limited to .450".
Toyota Corolla (71-74)	13 x 7	4 or 5	(F) 229 Disc (R) 231 Drum		Comp. Ratio limited to 12.0:1, Valve lift limited to .450". (2) auto type side drafts w/ 32mm choke(s) allowed at 2050 (*2101 **2153).
Toyota Yaris (06-09)	15 x 7	5	(F) 255 Disc (R) 200 Drum		
Triumph Spitfire Mk. I & II	13 x 6	4	(F) 9.2 Disc (R) 7.0 Drum	(F) 9.7 Disc #213227 (R) 8.0 Drum Front Discs: Girling 14P, Calipers and mounting kit: #V734	NOTE: Roll cage for cars under 1500 lbs are acceptable for cars registered with SCCA before 04/01/82. Use of cylinder head casting #303014 is permitted @ 1730 lbs. Cylinder head casting numbers must be maintained.
Triumph Spitfire	13 x 6	4	Factory Spec @ all 4 wheels		Comp. Ratio limited to 11.0:1, Valve lift limited to .450". The use of alternate material stub axles that are identical to stock components in all dimensions are permitted.
Triumph Spitfire 1500	13 x 6	4	Factory Spec @ all 4 wheels		Comp. Ratio limited to 11.0:1, Valve lift limited to .450". Alternate intake manifold, Pierce #J15-1952 allowed.
Triumph Spitfire	13 x 6	4	(F) 9.0 Disc (R) 7.0 Drum	(F) 9.7 Disc (R) 8.0 Drum May use Triumpg GT6 caliper as alternate front.	Comp. Ratio limited to 11.0:1, Valve lift limited to .450". Drivetrain Level 2 preparation only. Listed spec line weight does not change with alternate or stock transmission. Battery tray may be removed.
Volkswagen Golf (GTI, GT, GL)	15 x 7	5	(F) 239 Disc (R) 180 Drum		Comp. Ratio limited to 11.5:1, Valve lift limited to *.425"*. Can use stock fuel tank if stock rear bumper and bumper support structure is retained.
Volkswagen Jetta 1780 (85-91)	15 x 7	5	(F) 239 Disc (R) 180 Drum		Comp. Ratio limited to 11.5:1, Valve lift limited to *.425"*. Can use stock fuel tank if stock rear bumper and bumper support structure is retained.
Volkswagen Rabbit Cabriolet 1780	15 x 7	5	(F) 239 Disc (R) 180 Drum		Comp. ratio limited to 12.0:1. Valve lift limited to .425".

HP	Prep. Level	Weight (lbs)	Engine Type	Bore x Stroke mm/(in.)	Displ. cc/ (ci) *(nominal)*	Block Mat'l	Head/PN & Mat'l	Valves IN & EX mm/ (in.)	Carb. No. & Type	Wheelbase mm/(in.)	Track (F/R) mm/ (in.)
Volkswagen Rabbit 1588 (includes Cabriolet / convertible)	2	1785 * 1830 ** 1874	4 Cyl SOHC	79.5 x 80.0	1588	Iron	Alum	(I) 34.0 (E) 31.0	(1) 40 DCN, DCNF, fuel injection. 32mm choke(s) req'd.	94.5	58.9 / 57.2
Volkswagen Rabbit 1715 (81-84) (excl. conv.)	2	1990 * 2040 ** 2090	4 Cyl SOHC	79.5 x 86.4	1715	Iron	Alum	(I) 34.0 (E) 31.0	Fuel injection	2401	58.9 / 57.2
Volkswagen Rabbit GTI 1780 (83-84)	2	2065 * 2117 ** 2168	4 Cyl SOHC	81.0 x 86.4	1780	Iron	Alum	(I) 40.0 (E) 33.0	Fuel injection	2401	58.9 / 57.2
Volkswagen Scirocco 1457/1471	2	1650 * 1691 ** 1733	4 Cyl SOHC	76.5 x 80.0 79.5 x 73.4	1471 1457	Iron	Alum	(I) 34.0 (E) 31.0	(1) 40 DCN, DCNF, IDF w/ 32mm choke(s), or fuel injection.	94.5	58.9 / 57.2
Volkswagen Scirocco 1588	2	1785 * 1830 ** 1874	4 Cyl SOHC	79.5 x 80.0	1588	Iron	Alum	(I) 34.0 (E) 31.0	(1) 40 DCN, DCNF, or fuel injection. 32mm choke(s) req'd.	94.5	58.9 / 57.2
Volkswagen Scirocco 1715 (81-84)	2	1990 * 2040 ** 2090	4 Cyl SOHC	79.5 x 86.4	1715	Iron	Alum	(I) 34.0 (E) 31.0	Fuel injection	2401	58.9 / 57.2
Volkswagen Scirocco 1780 (8-valve) (83-88)	2	2065 * 2117 ** 2168	4 Cyl SOHC	81.0 x 86.4	1780	Iron	Alum	(I) 40.0 (E) 33.0	Fuel injection	2401	58.9 / 57.2

* Alternate transmission w/ stock type syncros
** Alternate transmission w/ non-stock type syncros (i.e. dog-ring)

HP	Wheels (max)	Trans. Speeds	Brakes Std. (mm/(in.))	Brakes Alt.: mm/(in.)	Notes:
Volkswagen Rabbit 1588 (includes Cabriolet / convertible)	13 x 7	4 or 5	Factory Spec @ all 4 wheels		Comp. Ratio limited to 11.5:1, Valve lift limited to .450".
Volkswagen Rabbit 1715 (81-84) (excl. conv.)	*15 x 7*	5	(F) 239 Disc (R) 180 Drum		Comp. Ratio limited to 11.5:1, Valve lift limited to .450".
Volkswagen Rabbit GTI 1780 (83-84)	15 x 7	5	(F) 239 Disc (R) 180 Drum		Comp. Ratio limited to 12.0:1, Valve lift limited to .425".
Volkswagen Scirocco 1457/1471	13 x 7	4 or 5	(F) 9.41 Disc (R) 7.1 x 1.19 Drum		Comp. Ratio limited to 11.5:1, Valve lift limited to .450". Only 1457cc engine may use fuel injection.
Volkswagen Scirocco 1588	13 x 7	4 or 5	Factory Spec @ all 4 wheels		Comp. Ratio limited to 11.5:1, Valve lift limited to .450".
Volkswagen Scirocco 1715 (81-84)	*15 x 7*	5	(F) 239 Disc (R) 180 Drum		Comp. Ratio limited to 11.5:1, Valve lift limited to .450".
Volkswagen Scirocco 1780 (8-valve) (83-88)	*15 x 7*	5	(F) 239 Disc (R) 180 Drum		Comp. Ratio limited to 12.0:1, Valve lift limited to .425".

Pace AMERICAN®

OFFICIAL TRAILER OF THE SCCA Sports Car Club of America

SCCA MEMBER REBATE

$500 ON TRAILERS OVER $7,500

$750 ON TRAILERS OVER $10,000

Pace American is the premier manufacturer of enclosed trailers. With five motorsport models to choose from, each with hundreds of options, you can design the perfect trailer for all your needs.

We are are proud to support the SCCA and its members throughout the year. Log onto Members Benefits at SCCA.com for the rebate or go to PACEAMERICAN.COM to learn more and find the dealer nearest you.

OFFER APPLIES TO 2011 and 2012 MODEL YEAR TRAILERS PURCHASED. SEE REBATE FORM FOR COMPLETE DETAILS.

PACEAMERICAN.com 800-247-5767 x2

9.1.6. AMERICAN SEDAN CATEGORY

These specifications are part of the SCCA GCR and all automobiles shall conform with GCR Section 9.

A. PURPOSE

The American Sedan (AS) class is intended to provide the membership with the opportunity to compete in V-8 powered automobiles, suitable for racing competition. To that end, cars will be those offered for sale in the United States. They will be prepared to manufacturer's specifications except for modifications and alternate specifications permitted by these rules. The Club may alter or adjust certain specifications to equate competitive potential.

B. INTENT

It is the intent of these rules to allow modifications useful and necessary to construct a safe, more reliable, competition automobile. Other than those items specifically allowed by these rules, no component or part normally found on a stock example of a given vehicle shall be disabled, altered, or removed for the purpose of obtaining any competitive advantage. Cars need not be eligible for state licensure or registration.

C. SPECIFICATIONS

1. To maintain the restricted basis of American Sedan, updating and/or backdating of components is only permitted within cars of the same make/model and listed on a single American Sedan Specification line. Any updated/backdated components shall be substituted as a complete assembly. No interchange of parts between assemblies is permitted, and all parts of an assembly shall be as originally produced for that assembly. No permitted or alternate component or modification shall additionally perform a prohibited function.

2. Cars are classified by make, model and engine displacement (see Section E.1., "Car Classification").

3. The SCCA shall specify the minimum weight for each classified car, as qualified or raced, with driver. Ballast is permitted.

D. AUTHORIZED MODIFICATIONS

The following modifications are authorized on all American Sedan Category cars. Modifications shall not be made unless specifically authorized herein. No permitted or alternate component or modification shall additionally perform a prohibited function.

1. Engine (additional specs., see Section F – Engine Build Sheets)

a. Induction System

Cars shall compete in American Sedan using the following method of induction.

1. All cars shall fit the approved carburetor and manifold. The approved manifold may be ported and polished, *and exhaust crossover may be blocked,* but its design and configuration shall not be altered in any other way. The lowering of or boring of holes in the center divider is prohibited. Removal or obliteration of the manifold part number is prohibited.

2. Only the approved carburetor (Holley #4776, 600cfm 4bll), optional insulator (Holley #108-12), two gaskets and manifold (Edelbrock Performer RPM #7101-General Motors / #7121-Ford/Mercury) shall be fitted to cars.

3. Other than as provided for in these rules, the carburetor shall not be modified in any way. Any carburetor jets, air jets, accelerator pump, pump cam, and accelerator pump nozzles may be used. Power valves, metering blocks, and floats may be altered or relaced. No venturi (including secondary or auxiliary) shall be modified in any way, but they may be aligned. Idle holes may be drilled in the throttle plates (butterflies). Butterfly attach screws can be modified or replaced. Carburetors may be modified to allow "four corner" idle adjustment.

4. External throttle linkage to the carburetor may be modified or changed from original. Choke mechanisms, plates, rods, and actuating cables, wires, or hoses may be removed. No removal or alteration of the carburetor air horn is permitted.

5. All air entering the intake tract shall pass through the carburetor air inlet.

b. Any fuel pump(s), fuel pressure regulators, or filters may be used and may be relocated, but shall not be located in the driver/passenger compartment. If a mechanical pump is replaced, a blanking plate may be used to cover the original mounting location. Fuel line(s) may be replaced, relocated, and given additional protection. If the relocated line(s) passes through the driver/passenger compartment, it/they shall be metal or metal braided, and shall be securely fastened.

c. An open-sided, closed-top air cleaner assembly, *with a maximum diameter of 16 inches*, with a filter element having a maximum diameter of 14 inches and a maximum height of 3 inches is required. Filter element material is unrestricted. Velocity stacks, ram air, cowl induction, shrouding or ducting of air to the air cleaner or carburetor are not permitted.

d. Exhaust emission control air pumps, associated lines, nozzles, and other electrical/mechanical emission devices may be removed. If such items are not removed, they shall not be modified in any way. If EGR devices/nozzles are removed from a cylinder head or manifold, any holes remaining shall be completely plugged.

1. Catalytic converter(s) may be removed.

e. Replacement exhaust manifolds, or "headers," may be used. Cylinder head mounting flange(s) shall be no thicker than 0.375 inch, and tubing diameter shall be no greater than 1.625 inch O.D., measured at any tube location one (1) inch from the flange to the collector. No exhaust pipe(s) shall pass over the engine, bellhousing, or transmission.

1. Exhaust shall exit behind the driver, and shall be directed away from the car body. A suitable exhaust muffling system may be necessary to meet sound control requirements.

f. Any ignition system which utilizes the distributor for spark timing and distribution is permitted. Any distributor that requires no modification to the engine may be fitted. Internal distributor components and distributor cap may be substituted.

1. Crank fire ignition systems are prohibited.

2. Any spark plugs, single coil, and ignition wires may be

used. Ignition timing is unrestricted.

3. Any battery may be used. The battery may be relocated as per GCR section 9.3 Batteries. Additional battery hold down devices may be used, and are strongly recommended.

g. The camshaft may be replaced with a unit of any origin meeting specified maximum lift (see Section F – Engine Build Sheets), measured at the valve with zero lash. Mandatory solid lifters meeting the requirements of Section g.2., below, shall be used.

1. Cam timing, timing chains, woodruff keys, dowel pins, and sprockets are unrestricted. Double row chains may be substituted for single row chains. Timing belts and timing gears are prohibited unless fitted as original equipment.

2. Valve lifters shall be of the solid (flat tappet) type only. Roller, hydraulic, or "mushroom" lifters are prohibited. Section F – Engine Build Sheets for additional specifications.

3. Valve springs are unrestricted except that they shall be made of steel. Heads may be machined to accommodate any valve spring. Valve spring retainers and keepers are unrestricted.

4. Rocker arms may be replaced with any rocker arm. Shaft mounted rocker arms are permitted unless otherwise fitted as standard using a minimum of eight shafts. Valve train stud girdles are allowed.

5. Pushrods may be replaced with any pushrods of steel (ferrous) material.

h. Oil pans, pan baffles, scrapers, and windage trays, oil pickups, lines, and filters are unrestricted. Main cap girdles may be fitted. A pressure accumulator/"Accusump" may be fitted. The location of the filter and accumulator are unrestricted, but they shall be securely mounted within the bodywork. All oil lines that pass into or through the driver/passenger compartment shall be metal or metal braided hose. Engine oil and oil additives are unrestricted.

i. Oil catch tanks are permitted. All engine breathers or vapor recirculation lines, if disconnected, shall vent to a catch tank of one (1) quart minimum capacity. Such catch tanks shall not be mounted in the driver/passenger compartment. Valve covers are unrestricted.

j. Engine block shall be cast iron as produced by the manufacturer for the specified displacement of the cars classified but shall not be restricted to the models or years listed. See Section F – Engine Build Sheets for additional specifications

1. Any aluminum replacement piston with three piston rings may be used. See Section F – Engine Build Sheets for additional specifications

2. Piston rings are unrestricted.

k. Balancing and "blueprinting" of the engine assembly are permitted. Lightening of parts beyond the minimum material removal necessary to balance is prohibited. An alternate,

commercially available, vibration dampener may be fitted.

l. Cylinder head to intake/exhaust manifold port matching is permitted. No material shall be removed from the cylinder head(s) further than one (1) inch in from the manifold to cylinder head mounting face(s). External dimensions of the cylinder head or intake/exhaust manifold shall not be reduced to facilitate internal porting. The throat area of the port consists of a single cut up to a maximum 90 degree angle at the very bottom of the steel valve seat as it transitions to the aluminum or cast iron casting below ("Throat Cut"). It is permitted to plunge cut the throats in order to correct for core shift that is commonly found in many cylinder heads. This cut cannot extend further than .800 inches below from the top of the ferrous valve seat. There can be no tooling or machine marks in the head below this point. The area where the cut meets the floor of the cylinder head port cannot be blended by hand, machined or chemically processed to create a smooth transition at this point. No aluminum or cast iron in the bowl area (other than that specified for the plunge cut) or the ports may be removed, added or manipulated for any reason. It is understood that many heads may look slightly different from bowl to bowl due to casting irregularities. No material may be removed or added from the short turn radius in the port.

Any modification of the cylinder head beyond that permitted in this section and Section F. (Engine Build Sheets) is prohibited. See Section F – Engine Build Sheets for additional specifications.

Valve guide material is unrestricted.

Milling of the cylinder head to increase compression ratio is permitted.

Any or all valve seats may be replaced. Valve seat material must be ferrous.

The combustion chamber may be repaired or modified in the area shown in Section F – Engine Build Sheets, Drawing 2 to repair or prevent pitting or damage between the intake and exhaust valves. This repair/modification may serve no other purpose.

m. Only stock, steel, or stainless steel intake and exhaust valves are permitted. Titanium or titanium alloy valves are not permitted. Valve seat specifications shall comply with Section F – Engine Build Sheets, Drawing 1. Valve length and valve stem installed height is open. Any valve seal may be used. A valve job will consist of 3 valve angles ("Valve Angles") only not including the Throat Cut angle. Each of these Valve Angles is open. The widths of the Valve Angles on the head and on the valve are open. *The maximum diameter of the cut in each valve seat is .250 inches greater than the diameter of its valve head.* Additional valve specifications are listed in Section F – Engine Build Sheets. Valve seat specifications shall comply with Section F – Engine Build Sheets, Drawing 1.

n. Any clutch disc and pressure plate of stock diameter may be used. Pressure plate/clutch cover assembly shall be ferrous only and shall bolt in the original stock mounting location. Balancing of the flywheel/clutch cover assembly/pressure plate is permitted. Any flywheel of stock diameter and weighing a

minimum of 15.0 lbs w. ring gear may be used. SFI 1.1 or 1.2 spec flywheel and clutch are allowed as long as they meet the above specifications. Aftermarket starters mounted in stock location are permitted.

o. Hardware items (nuts, bolts, etc.) may be replaced with similar items performing the same fastening function(s). Engine gaskets are unrestricted. Engine drive belts and pulleys may be replaced with any non-tooth drive belt and appropriate pulleys. Power steering and alternator brackets may be modified or replaced with similar items performing the same mounting function. *Motor mounts are unrestricted. Engine must remain in the original, or approved location. This rule pertains to all cars, including restricted preparation.*

p. All engine components not otherwise listed in these rules shall meet factory specifications for stock parts. Where factory specifications are absent or unclear, the Club may establish an acceptable dimension and/or allowable tolerance from stock.

q. Engine parts, including, but not limited to, heads, intake manifolds and carburetors, may be cleaned using usual methods (e.g., bead blasting, soda blasting, Scotch Brite pads) as long as part dimensions are not altered.

r. Any belt driven, mechanical power steering pump and any alternator may be used. They must mount to the front of the engine. Remote reservoirs may be added.

2. Engine Cooling System

a. Any radiator may be used, provided it can be mounted in the original location and requires no body or chassis modifications to install. Catch and/or expansion tanks may be added or substituted. Engine coolant fluid, coolant/heater hoses and clamps may be substituted. Heater hoses may be plugged. Heater water control valve(s) may be added or substituted. The entire heater assembly may be removed. This includes all hoses, lines, ducts, coils and controls. Any resulting holes in the firewall must be plugged or covered.

b. Engine and power steering oil cooler(s) may be added or substituted. Location within the chassis is free, provided that it/they are not mounted within the driver/passenger compartment.

c. Cooling fans may be removed or replaced. Electrically operated fans with manual or automatic actuation may be fitted.

d. Thermostats may be modified, removed, or replaced with blanking sleeves or restrictors.

e. Air conditioning systems may be removed in whole or in part.

f. Screens of 1/4 inch minimum mesh may be mounted in front of the radiator and/or oil cooler(s) and contained within the bodywork.

g. Any mechanical (non-electrical) water pump may be used provided it is mounted in the original position.

3. Transmission/Final Drive

a. Any final drive ratio is permitted provided it fits the stock differential housing without modification to the housing.

b. Any limited slip or locked differential is permitted.

c. No alteration to the stock transmission gear ratios is allowed.

d. Hardware items (nuts, bolts, etc.) may be replaced by similar items performing the same fastening function(s). Driveshaft may be modified to fit alternate differentials. Factory driveshafts may be replaced with any one-piece driveshaft of steel or aluminum construction. Minimum driveshaft diameter shall be no smaller than stock.

e. Driveshaft loops are recommended.

f. Any conventional H-pattern, non-sequential shifter may be used.

g. Ford 9" rear axle is permitted in all cars. Center section shall be of ferrous material.

h. C-clip eliminators are permitted.

i. Full floater axles are permitted.

j. *Transmission mounts are unrestricted. This rule pertains to all cars, including restricted preparation.*

k. *Any H-Pattern 4 or 5 Speed transmission is permitted with the gear ratios listed on the vehicle spec line, helical cut forward gears with a minimum angle of 15 degrees. Sequential shifting transmissions are prohibited. Pneumatic, hydraulic or electric actuation of the gear shift mechanism is prohibited. Transmissions that use a gear engagement mechanism different than stock type (e.g., circular, beveled) are prohibited. All face-tooth engagement gearboxes (e.g., dog rings) are prohibited.*

l. Aftermarket or modified rear differential covers are allowed.

4. Suspension

a. Ride Height

1. Minimum ride height is five (5) inches, to be measured at the lowest point of the *sheet metal* rocker panel, but not to include welded seams, *stock ground effects cladding*, or fasteners.

b. Springs and Shock Absorbers

1. Springs of any origin may be used, provided they are of the same number and type as originally fitted and that they must be installed in the original location. Coil over springs and shocks are prohibited, unless fitted as original equipment.

2. Any shock absorbers may be used, provided they attach to the original mounting points. The number of shock absorbers shall be the same as stock. Remote reservoir shock absorbers are permitted. The location of the reservoir is unrestricted. No shock absorber may be capable of adjustment while the car is in motion.

3. Strut equipped cars may substitute struts and/or may use any insert. On cars where the strut assembly also serves to locate a spring, the lower spring seat ride height location may be altered from stock. Spacers, including threaded units with adjustable spring seats, may be used.

4. Spacers, including threaded units with adjustable spring seats (weight jacks), may be used with coil springs. If spacers are used, they shall be located on and shall be

permanently attached to existing chassis or suspension structure, but shall not serve as a reinforcement to that structure. Material may be removed from the upper or lower spring seat to facilitate installation of the spacers. Material may be removed from the chassis, but not the bodywork, to facilitate adjustment of the spacers.

5. Limiting straps to preclude a spring from becoming dislodged are permitted.

c. Suspension Control

1. Any anti-roll bar(s), traction bar(s), panhard rod or watts linkage may be added or substituted, provided its/their installation serves no other purpose. The mounts for these devices may be welded or bolted to the structure of the vehicle. No suspension control mount or component shall be located in the trunk or driver/passenger compartment unless installed by the manufacturer as original equipment.

d. Suspension Mounting Points

1. Cars equipped with strut suspension may decamber wheels by the use of eccentric bushings at control arm pivot points, by the use of eccentric bushings at the strut-to-bearing-carrier joint, and/or by use of slotted adjusting plates at the top mounting point. If slotted plates are used, they shall be located on existing chassis structure. Material may be added or removed from the top of the strut tower to facilitate installation of adjuster plate.

2. On other forms of suspension, camber adjustments may be achieved by the use of shims and/or eccentric bushings. Rear camber shall be no more than 1/2 degree negative per side.

3. All forms of suspension may adjust caster by means of shims or eccentric bushings. Additionally, MacPherson strut equipped cars may adjust caster at the upper strut mounting point/plate.

4. One (1) stayrod may be fitted between the upper front strut/shock towers. One (1) stay rod may be fitted between each front strut/shock tower and the firewall, but no stayrod shall attach to any other front chassis, body, or engine location unless fitted as standard equipment.

5. Bushing material is unrestricted except that bushing material must be at least as stiff as stock (i.e. equal or higher durometer rating). “Air”, foam or other soft materials that render the control arms ineffective, are strictly forbidden. Control arm to spindle ball joints must be stock or equivalent replacement. Ball joint may be welded or positively attached. Original unmodified control arms must be retained. Pins, keys, or weldment may be used to prevent the rotation of alternate bushings, but may serve no other purpose that that of retaining the bushing in the desired position.

6. Rubber bump stops may be removed, modified, or replaced, but their chassis mounts, brackets, etc., shall not be altered in any way.

7. Pick-up points on the rear axle housing may be relocated. The removal and / or replacement of the rear suspension

torque arm on GM F-body cars and the upper arm on Ford Mustangs is allowed. Pick-up points, on the chassis, for front and rear lower control arms, shocks and springs, must remain in the original location.

8. Hardware items (nuts, bolts, etc.) may be replaced by similar items performing the same fastening function(s).

9. The use of offset steering rack bushings is permitted. Tie rods and tie rod ends may be modified or replaced. Spindles may be machined so that tapered tie-rod end bolts can be replaced with straight bolts.

5. Brakes

a. Brake pads, brake linings, and brake fluid are unrestricted.

b. Backing plates and dirt shields may be ventilated or removed. Air ducts may be fitted to the brakes, provided that they extend in a forward direction only, and that no changes are made in the body/structure for their use. Brake drums shall not be modified other than for truing within manufacturer's specifications.

c. Any hub/rotor may be used within the following limitations:

1. One piece front or rear hub with rotor may be replaced with separate hub, rotor hat, and rotor.

2. Hubs shall be of ferrous material or aluminum.

3. Rotor hat shall be of ferrous material or aluminum and may be part of the hub or rotor.

4. Rotor shall be of ferrous material, vented. Rotor shall be the same diameter and thickness as the standard or alternate listed on the specification line for the vehicle.

d. Rear caliper mounting brackets may be substituted.

e. Brake lines may be replaced with steel lines or Teflon lined metal braided hoses. Lines/hoses may be relocated and may be given additional protection. Brake fittings, adapters, and connectors are unrestricted. Brake system circuitry may be revised. The original master cylinder may be replaced with any single or dual master cylinder (with balance bar). The pedal assembly, including the clutch pedal, clutch and brake master cylinders, mechanical linkage and hydraulic lines, may be modified or replaced. The pedal assembly, and master cylinders, may be relocated. The throttle pedal may not be relocated. The brake booster may be modified, replaced or removed. A brake-bias adjustment cable is permitted. *A vacuum reservoir or booster may be added.*

Firewalls and cowlings may be modified to allow for installation of the pedals and master cylinders. Modification must be the minimum required to complete the installation, and shall not serve any other purpose. Two brackets or tubes, between the front roll cage cross tube, and the firewall may be added. These brackets or tubes must not serve any other purpose and are not considered roll cage attachment points.

f. Brake proportioning valve*s* may be used provided that they are of the inline, pressure limiting type.

g. Parking brakes, mechanisms, and actuating components may

be removed.

h. The Club may permit alternate brake system components. Any such component shall be specifically authorized on the specification line for that vehicle.

i. Front calipers: Any aluminum bodied caliper using four (4) or fewer pistons and using one (1) brake line per caliper as listed on the specification line for that vehicle is allowed.

1. Front spindles may be modified to facilitate mounting of alternate brake calipers. Spindle modifications shall serve no other purpose.

2. Alternate calipers shall be mounted in the factory location.

j. Rear calipers: Any ferrous or aluminum caliper using four or fewer pistons and using one brake line per caliper.

6. Wheels/Tires

a. Any wheel/tire may be used within the following limitations:

1. Cars may fit any wheel sixteen (16) inches in diameter or smaller. Maximum wheel width is eight (8) inches. Knockoff/quickchange type wheels are prohibited.

2. Tires must conform to 9.3.45.

3. Track may be changed to accommodate larger tires, provided that there is safe tire/fender/chassis clearance under all conditions of steer, bump, and rebound. Wheel spacers are permitted.

4. Tire tread (that portion of the tire that contacts the ground) shall not protrude beyond the fender opening when viewed from the top perpendicular to the ground.

5. Any wheel stud, bolt, and/or nut is permitted.

7. Body/Structure

a. Fenders and wheel openings shall remain unmodified. It is permitted to roll under or flatten any interior lip on the wheel opening for tire clearance. Cars with plastic/composite fenders may remove any interior wheel opening lip, but the resulting material edge shall be no thinner than the basic fender material thickness. Non-metallic inner fender liners may be removed, replaced, or altered. Engine compartment and door rubber seals may be removed.

b. A front spoiler/air dam is permitted. It shall not protrude beyond the overall outline of the body when viewed from above perpendicular to the ground. The spoiler/air dam shall be mounted to the body, and shall extend no higher than four (4) inches above the horizontal centerline of the front wheel hubs. *The spoiler/air dam shall not extend toward the rear of the car further than the vertical centerline of the front wheel hubs.* It shall not cover the normal grille opening(s) at the front of the car. Openings are permitted for the purposes of ducting air to the brakes, cooler, and radiator. Front parking light assemblies may be removed for ducting of air. Headlights and headlight operating ancillaries may be removed. All resulting openings shall be covered by *solid* panels of an alternate material. These covers shall be of the same contour as the original lens. Rear spoilers or wings shall be as originally fitted or as specifically

authorized on the classification line for that vehicle.

c. No body component, including the spoiler/air dam, shall be lower than the lowest part of the wheel rims. OEM (factory) radiator baffle is permitted and may extend below the lowest part of the wheel rims only if installed in the stock location.

d. Hood and trunk pins, clips, or positive action external latches are permitted. Stock hood and trunk latches may be disabled or removed; if so, some positive action external fastening method shall be used. Stock hood hinges may be removed, modified, or replaced.

e. Sunroofs (original or aftermarket) may be retained if bolted in. T-tops are prohibited.

f. All chassis/structural repair, if performed, shall be in concurrence with factory procedures, specifications, and dimensions. Unless specifically authorized by the manufacturer for repair or allowed by these rules, no reinforcement, i.e., seam welding, material addition, etc., is permitted.

g. Body repair shall be performed using every reasonable effort to maintain stock body contours, lips, etc.. Any body repair modification having as its purpose increased clearance is prohibited. In those circumstances where stock trim/molding pieces are unavailable through all normal replacement channels, proof of such unavailability shall be provided by the competitor.

h. Underhood bracing on stock hoods may be modified or removed. Fiberglass hoods, including cowl hoods up to 3" may be used. Otherwise the external profile of the hood shall remain stock. Ram air openings and rear openings must be blocked off to prevent passage of air.

8. Driver/Passenger Compartment - Trunk

a. The driver's seat (only) shall be replaced with a one-piece bucket-type race seat. Factory seat tracks/brackets may be modified, reinforced, and/or removed to facilitate replacement mountings provided they perform no other function. All other seats may be removed.

b. Any steering wheel except wood rimmed types may be used. Any shift knob may be used.

c. Gauges and instruments are unrestricted. The instrument panel may be modified or replaced.

d. Any interior or exterior mirrors may be used.

e. Rear seat back, rear seat bottom cushion(s), sun visors, seat belts and their attaching hardware and bracketry may be removed. In those automobiles where the rear seat back provides the only solid bulkhead between the driver/passenger compartment and an exposed stock gas tank, a metal bulkhead completely filling the exposed seat back opening shall be installed.

f. In those automobiles where rear seat back removal does not expose the stock gas tank directly to the driver/ passenger compartment, a metal (only) bulkhead is optional.

g. Complete removal of interior panels is allowed. Other than to provide for the installation of required safety equipment or other authorized modifications, no other driver/passenger

compartment alterations or gutting are permitted.

h. Any removable covers used to cover spare tires, tools, bins, etc., may be removed along with attaching hardware and bracketry. Carpets, mats, and their insulating or attaching materials may be removed from the floor and recesses of the cargo/trunk/spare tire area. Door and rear hatch weather-stripping may be removed or replaced provided the modification serves no other purpose.

i. Dead pedal/foot rest and heel stop may be added.

j. Removal of wiring associated with a component which may be removed by these rules is permitted. All non-essential wiring, switches, gauges, horns, flashers, relays, and lights may be removed. Existing wiring may be substituted.

k. Modifications may be made to the foot pedals to improve the comfort of and control accessibility to the driver.

l. Frame or subframe shall be stock for body used. The front and rear subframes may be tied together (front to rear, without crossing the centerline of the chassis) with subframe connectors consisting of curved or straight steel tubing (round, square, or rectangular section) with a maximum wall thickness of 0.125”. These connectors may be bolted or welded to the subframes. These connectors may extend under the floor or may extend through the floor with the floor completely welded to this member.

m. Windshield defrosters are allowed as long as they serve no other purpose. Windshield wipers, motors, arms and brackets may be removed or replaced.

n. The door window glass, window operating mechanism, inner door trim panel, armrest, map pockets, and inside door latch/lock operating mechanism may be removed and the inner door structural panel may be modified or removed.

9. Safety

a. *Original door hinges and safety intrusion beam shall be retained Doors may be pinned, not bolted, for safety.*

b. Airbags/ passive restraint systems shall be removed.

c. Fuel cells are mandatory. Cell size is not restricted. It shall be located within twelve (12) inches of the original fuel tank location or behind the rear axle. Additional reinforcement may be added to support the fuel cell, but such reinforcement shall not attach to the roll cage. Floor pan may be modified for installation.

d. OEM light assemblies (i.e. fog lamps, driving lights, etc.) mounted on or below (but not in) the bumper shall be removed. Resulting holes may be used for the purpose of ducting air to the brakes, cooler and or radiator as permitted in D.7.b.

e. The steering column is unrestricted. A collapsible type steering column is strongly recommended. The driver’s normal seated position must not be relocated.

f. All cars registered 1/1/08 or later shall have a roll cage that meets the requirements of section 9.4. Cars registered before 1/1/08 must comply with section 9.4 or with the 2007 GT roll cage rules in Appendix I.

E. CAR CLASSIFICATION

No automatic transmissions, turbochargers/ superchargers, or convertibles are permitted in American Sedan. Cars are classified by body style and engine displacement. All components and/or assemblies utilized, except for engine block, shall originate on a vehicle of the body style and displacement classified or be authorized on the car's specification line. NOTE: For competition in American Sedan 1993+ Chevrolet Camaros and Pontiac Firebirds shall be prepared to 1982-1992 Chevrolet Camaro and Pontiac Firebird engine and transmission specifications per current American Sedan Category Specifications. Ford Mustangs shall be prepared to the 79-93 Mustang engine and transmission specifications per the current American Sedan Category Specifications.

F. ENGINE BUILD SHEETS

No. of Cylinders: V-8
Bore (Max): 4.040"
Stroke (Max): 3.500"
Compression Ratio: 10.30 Max.
Piston to Deck Clr: Not to exceed 0.013" above block deck surface (zero deck)
Valve Lift: 0.5000" Max. @ 0.0000" lash
Head Casting #'s: see spec lines
Crankshaft Casting #'s:
GM: 3932442, 14088526, 14088835, 566607
Ford: 2M, 2MA, 2MAB, 2MAC, 2MAD, 2MAE, E1AE-AA, E7AE-AA
Notes:

1. Any commercially available steel crankshaft which meets approved stroke, journal diameters and other specified dimensions and requirements is permitted. The minimum weight for any steel crankshaft shall be 42 lbs.
2. Crankshaft casting seam flash may be deburred.
3. Steel main bearing caps and four bolt main bearing caps may be fitted provided no other modifications are made to any approved part or specified dimension. Blocks may be machined to accept four bolt bearing caps.

BLOCK

Crankshaft Housing Bore: 2.4412-2.6416"
Block Deck Height:
GM: 9.0070-9.0430"
Ford: 8.1880-8.2240"
Bore Spacing:
GM: 4.4000"
Ford: 4.3800"
Options:

1. One-piece rear main seal adapter (with seal) may be used.
2. Cylinder block oil restrictors may be installed.
3. Block may be machined for the purpose of installing cylinder O-rings.
4. Block may be machined to true warped surfaces
5. Block casting seam flash may be deburred.
6. Lifter bore sleeving is permitted.
7. Cylinder bores may be sleeved. A maximum of two cylinders may be sleeved.

CONNECTING RODS

Big End Bore: 2.2247-2.2398"
Pin Fit: Floating or Interference Fit
Center to Center: 6.00" Max
Material: Forged Steel / Cast Iron (No Billet)

Alternate Manufacture: Any rod meeting the AS specs is permitted.
Options:
1. Wrist pin oiling holes may be added.

CAMSHAFT
Drive Type: Single or Dual-row chain
Lifter Type: Solid, flat-tappet
Lifter Dia: .8750" nominal
Options:
1. Camshaft thrust button may be installed

CRANKSHAFT
Main Journal Dia (Min): 2.2182"
Rod Journal Dia (Min): 2.0690"
Options:
1. Crankshaft casting seam flash may be deburred.

PISTON
Material: Aluminum (Cast or Forged)
Ring Configuration: 3 rings, above pin
Dome Configuration: Any dome configuration is permitted.
Pin Diameter: .930" Max
Options:
1. Pins may be centered or offset. Offset shall not exceed factory specifications.

CYLINDER HEADS
Valve Job (Head): Refer to Figure 1
Intake Valve Size (Max): 1.94"
Exhaust Valve Size (Max): 1.55"
Port Volume (Max.): see spec line
Options:
1. Angle milling permitted on head gasket or intake manifold gasket surface(s) only. Modification or machining of exhaust manifold surfaces of cylinder head is prohibited.
2. Intake manifold surface may be milled to match angle milled head.
3. Heads may be machined to accept pushrod guide plates.
4. Heads may be machined to accept screw-in rocker studs.
5. Heads may be machined to for the purpose of installing integral o-ring head gaskets.
6. Heat riser passage may be blocked.
7. Valve spring pockets may be machined.

Notes:
1. Absolutely no modification, machining, tooling, etc. of the combustion chambers is permitted.

MISCELLANEOUS
1. Direct replacement high volume/pressure oil pumps may be fitted provided that no modification to the engine is required for their installation. Alternate oil pump drive shafts may be fitted.

G. MEASUREMENT STANDARDS
Measurement standards shall be as specified in Appendix C. with the following exceptions: Wheelbase has a tolerance of + 2"/- 1".

Figure 1 Valve Seat Cutting Dimensions

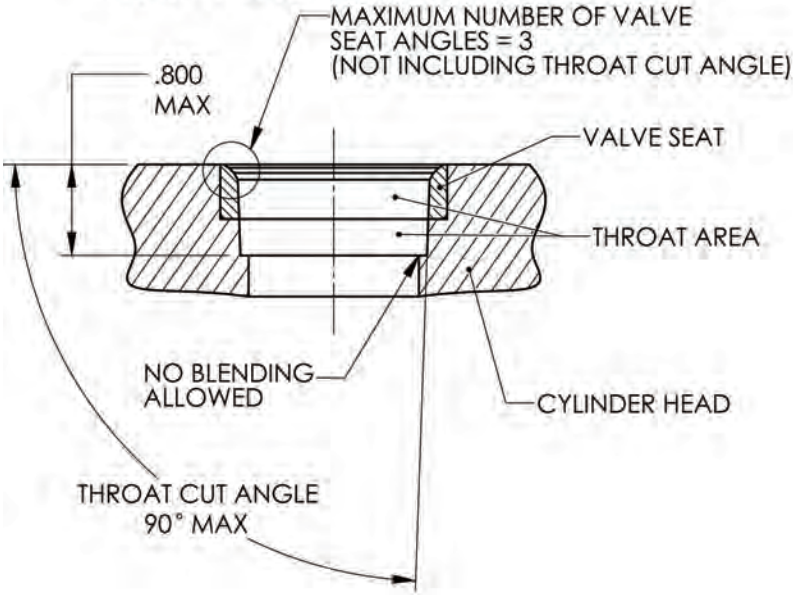

Figure 2 Aluminum Cylinder Head Repair Zone

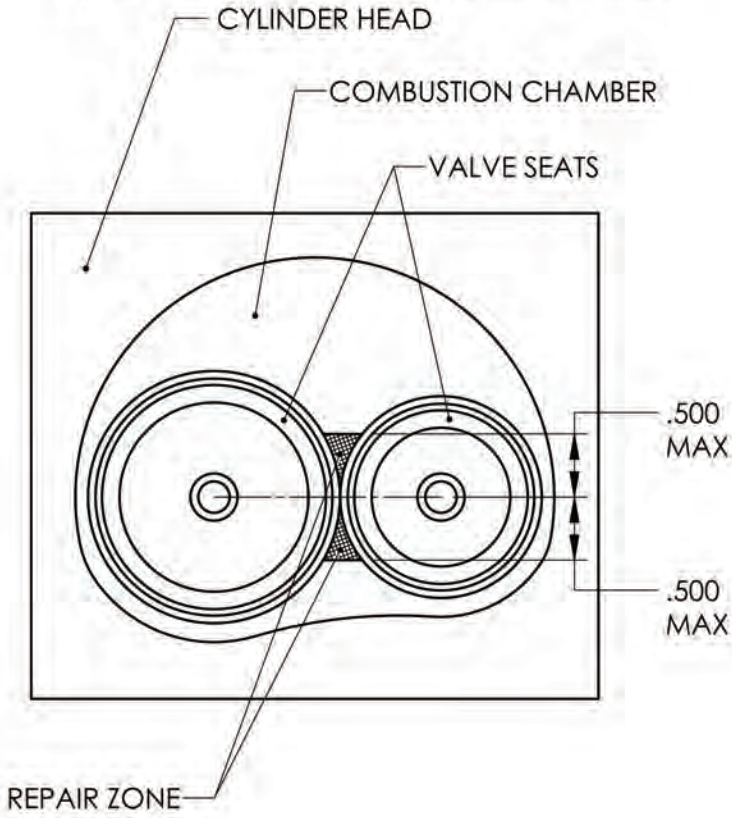

AS	Wheel-base	Gear Ratios Std. (or Alt.)	Brakes (Max) (in/mm)	Weight (lbs)	Notes:
Cadillac CTS-V (04-05) Restricted Prep.	113.4	2.97, 2.07, 1.43,1.00, 0.84, 0.56	(F) 355 Vented Disc (R) 365 Vented Disc	*3750*	Cars shall be prepared to ASCS except that engines and transmissions/final drives must comply with TCS sections 9.1.10.D, 9.1.10.D.1, 9.1.10.D.4. Exhaust systems may be modified per ASCS specifications except OEM manifolds must be maintained. OEM engine/transmission mounts must be maintained. OEM accessory drives must be maintained, except for removal of Air Conditioning Compressors and Supplemental A.I.R. pumps. Shorter drive belts and/or idler pulleys may be utilized. OEM overbore replacement pistons may be utilized. ABS brake systems must be disabled by disconnecting a front wheel speed sensor. An additional rear brake proportioning valve may be added. Factory fuel tanks may be utilized. Roll cages in existing cars must meet or exceed 2003 TCS specifications. Newly constructed cars must meet ASCS roll cage requirements. A .060 in. thick SIR may be added to maintain performance parity within the class. Max. Tire Size: 275, Max. Wheel Size: 18 x 9.5. Any final drive ratio and LSD permitted. Stock brakes must be retained when using authorized wheels larger than 16 x 8. Installation of ASedan specification brakes requires the use of 16 x 8 wheels.
Cadillac CTS-V (06-07) Restricted Prep.	113.4	2.97, 2.07, 1.43, 1.00, 0.84, 0.56	(F) 355 Vented Disc (R) 365 Vented Disc	*3800*	Cars shall be prepared to ASCS except that engines and transmissions/final drives must comply with TCS sections 9.1.10.D, 9.1.10.D.1, 9.1.10.D.4. Exhaust systems may be modified per ASCS specifications except OEM manifolds must be maintained. OEM engine/transmission mounts must be maintained. OEM accessory drives must be maintained, except for removal of Air Conditioning Compressors and Supplemental A.I.R. pumps. Shorter drive belts and/or idler pulleys may be utilized. OEM overbore replacement pistons may be utilized. ABS brake systems must be disabled by disconnecting a front wheel speed sensor. An additional rear brake proportioning valve may be added. Factory fuel tanks may be utilized. Roll cages in existing cars must meet or exceed 2003 TCS specifications. Newly constructed cars must meet ASCS roll cage requirements. A .060 in. thick SIR may be added to maintain performance parity within the class. Max. Tire Size: 275, Max. Wheel Size: 18 x 9.5. Any final drive ratio and LSD permitted. Stock brakes must be retained when using authorized wheels larger than 16 x 8. Installation of ASedan specification brakes requires the use of 16 x 8 wheels.
Camaro & Firebird (82-92)	101.0	3.42, 2.28, 1.45, 1.00 or 2.95, 1.94, 1.34, 1.00, 0.73 or 3.35, 1.93, 1.29, 1.00, 0.61	12.2 x *1.27* Disc	*3230* Over 313 CID *3530*	Dana 44 axle permitted. Engine built to A/S Build Sheet specifications with the following: Head Casting #'s: 14101081, 14014416 Port Volume (Max.): 081 casting: 170.00 cc IN/65.00 EX; 416 Casting 168.00cc IN/60.00 EX Edelbrock Cylinder Head Part #'s 608979, 608879 may be used with a *150* lb. weight penalty. *Camaro only: To aid cooling, the center of the grill opening (license plate area) and bumper backing may be removed.*
Camaro & Firebird (93-02)	101.1	2.95, 1.94, 1.34, 1.00, 0.73 or 3.35, 1.93, 1.29, 1.00, 0.61	12.2 x *1.27* Disc	*3230* Over 313 CID *3530*	Dana 44 axle permitted. Right side wiper mechanism may be removed and underside of cowl may be modified to facilitate carb installation. P/S bracket may be modified or replaced to accomodate the P/S pump. The cowl and shock tower sheet metal may be modified to allow the installation of an 82-92 F-body brake booster and master cylinder. Engine/transmission installation procedure as provided by SCCA Club Racing shall be utilized. Engine built to A/S Build Sheet specifications with the following: Head Casting #'s: 14101081, 14014416; Port Volume (Max.): 081 casting: 170.00 cc IN/65.00 EX; 416 Casting 168.00cc IN/60.00 EX; Edelbrock Cylinder Head Part #'s 608979, 608879 may be used with a *150* lb. weight penalty.

AS	Wheel-base	Gear Ratios Std. (or Alt.)	Brakes (Max) (in/mm)	Weight (lbs)	Notes:
Camaro & Firebird (93-97) Restricted Prep.	101.1	2.97, 2.07, 1.43, 1.00, 0.80, 0.62	12.2 x *1.27* Disc	3480 SS/WS6: 3580	Cars shall be prepared to ASCS except that engines and transmissions/final drives must comply with TCS sections 9.1.10.D, 9.1.10.D.1, 9.1.10.D.4. Exhaust systems may be modified per ASCS specifications except OEM manifolds must be maintained. OEM engine/transmission mounts must be maintained. OEM accessory drives must be maintained, except for removal of Air Conditioning Compressors and Supplemental A.I.R. pumps. Shorter drive belts and/or idler pulleys may be utilized. OEM overbore replacement pistons may be utilized. ABS brake systems must be disabled by disconnecting a front wheel speed sensor. An additional rear brake proportioning valve may be added. Factory fuel tanks may be utilized. Roll cages in existing cars must meet or exceed 2003 TCS specifications. Newly constructed cars must meet ASCS roll cage requirements. A .060 in. thick SIR may be added to maintain performance parity within the class. Max. Tire Size: 275, Max. Wheel Size: 16 x 8. Any final drive ratio and LSD permitted. Camaro SS hood from SLP or SVD is permitted with ram air opening sealed to prevent the passage of air. *WS6 hood is permitted with ram air opening sealed to prevent the passage of air.*
Camaro & Firebird (98-02) Restricted Prep.	101.1	2.66, 1.78, 1.30, 1.00, 0.74, 0.50	12.2 x *1.27* Disc	3530	Cars shall be prepared to ASCS except that engines and transmissions/final drives must comply with TCS sections 9.1.10. D, 9.1.10.D.1, 9.1.10.D.4. Exhaust systems may be modified per ASCS specifications except OEM manifolds must be main-tained. OEM engine/transmission mounts must be maintained. OEM accessory drives must be maintained, except for removal of Air Conditioning Compressors and Supplemental A.I.R. pumps. Shorter drive belts and/or idler pulleys may be utilized. OEM overbore replacement pistons may be utilized. ABS brake systems must be disabled by disconnecting a front wheel speed sensor. An additional rear brake proportioning valve may be added. Factory fuel tanks may be utilized. Roll cages in existing cars must meet or exceed 2003 TCS specifications. Newly constructed cars must meet ASCS roll cage requirements. A .060 in. thick SIR may be added to maintain performance parity within the class. Max. Tire Size: 275, Any final drive ratio and LSD permitted. Stock brakes must be retained when using authorized wheels larger than 16 x 8. Installation of ASedan specification brakes requires the use of 16 x 8 wheels. *WS6 hood is permitted with ram air opening sealed to prevent the passage of air. Poly F-body engine mounts - Prothane part #7512; Poly F-body transmission mount - Prothane part #71604.*
Mustang Incl. Cobra & Cobra R (79-93)	100.4	3.07, 1.72, 1.00, 0.70 or 2.95, 1.94, 1.34, 1.00, 0.63 or 3.35, 1.99, 1.33, 1.00, 0.68	12.2 x *1.27* Disc	*3030* Over 313 CID *3330*	Permitted: Rear disc brake kit (M-2300-C) and/or 5-lug kit (M-2300-F). Engine built to A/S Build Sheet specifications with the following: Head Casting #'s: F3ZE-AA (GT40), F1ZE-AA (GT-40), F77E-AA (GT-40P) Port Volume (Max.): 143.00cc IN/54.00cc EX (GT-40 & GT-40P) Edelbrock Cylinder Head Part #'s 602579, 602479 may be used with a *150* lb. weight penalty.
Mustang Incl. Cobra thru 95 (94-98)	101.3	2.95, 1.94, 1.34, 1.00, 0.63 or 3.35, 1.99, 1.33, 1.00, 0.68	12.2 x *1.27* Disc	*3230* Over 313 CID *3530*	Hydro boost braking system is not permitted. Any 1994, and up, Mustang vacuum assisted braking system shall be used. Engine built to A/S Build Sheet specifications with the following: Head Casting #'s: F3ZE-AA (GT40), F1ZE-AA (GT-40), F77E-AA (GT-40P); Port Volume (Max.): 143.00cc IN/54.00cc EX (GT-40 & GT-40P); Edelbrock Cylinder Head Part #'s 602579, 602479 may be used with a *150* lb. weight penalty.

AS	Wheel-base	Gear Ratios Std. (or Alt.)	Brakes (Max) (in/mm)	Weight (lbs)	Notes:
Mustang Cobra (94-95) Restricted Prep.	101.3	3.35, 1.99, 1.33, 1.00, 0.68	(F) 330 Vented Disc (R) 296 Vented Disc	3580	Cars shall be prepared to ASCS except that engines and transmissions/final drives must comply with TCS sections 9.1.10.D, 9.1.10.D.1, 9.1.10.D.4. Exhaust systems may be modified per ASCS specifications except OEM manifolds must be maintained. OEM engine/transmission mounts must be maintained. OEM accessory drives must be maintained, except for removal of Air Conditioning Compressors and Supplemental A.I.R. pumps. Shorter drive belts and/or idler pulleys may be utilized. OEM overbore replacement pistons may be utilized. ABS brake systems must be disabled by disconnecting a front wheel speed sensor. An additional rear brake proportioning valve may be added. Factory fuel tanks may be utilized. Roll cages in existing cars must meet or exceed 2003 TCS specifications. Newly constructed cars must meet ASCS roll cage requirements. A .060 in. thick SIR may be added to maintain performance parity within the class. Max. Tire Size: 275, Max. Wheel Size: 17 x 9. Any final drive ratio and LSD permitted. Stock brakes must be retained when using authorized wheels larger than 16 x 8. Installation of ASedan specification brakes requires the use of 16 x 8 wheels.
Mustang Cobra R (1995) Restricted Prep.	101.3	3.27, 1.98, 1.34, 1.00, 0.68	(F) 330 Vented Disc (R) 296 Vented Disc	3680	Cars shall be prepared to ASCS except that engines and transmissions/final drives must comply with TCS sections 9.1.10.D, 9.1.10.D.1, 9.1.10.D.4. Exhaust systems may be modified per ASCS specifications except OEM manifolds must be maintained. OEM engine/transmission mounts must be maintained. OEM accessory drives must be maintained, except for removal of Air Conditioning Compressors and Supplemental A.I.R. pumps. Shorter drive belts and/or idler pulleys may be utilized. OEM overbore replacement pistons may be utilized. ABS brake systems must be disabled by disconnecting a front wheel speed sensor. An additional rear brake proportioning valve may be added. Factory fuel tanks may be utilized. Roll cages in existing cars must meet or exceed 2003 TCS specifications. Newly constructed cars must meet ASCS roll cage requirements. A .060 in. thick SIR may be added to maintain performance parity within the class. Max. Tire Size: 275, Max. Wheel Size: (F)17 x 9 (R)17x10. Any final drive ratio and LSD permitted. Stock brakes must be retained when using authorized wheels larger than 16 x 8. Installation of ASedan specification brakes requires the use of 16 x 8 wheels.
Mustang Cobra (96-98) Restricted Prep.	101.3	3.37, 1.99, 1.33, 1.00, 0.67	(F) 330 Vented Disc (R) 296 Vented Disc	3480	Cars shall be prepared to ASCS except that engines and transmissions/final drives must comply with TCS sections 9.1.10.D, 9.1.10.D.1, 9.1.10.D.4. Exhaust systems may be modified per ASCS specifications except OEM manifolds must be maintained. OEM engine/transmission mounts must be maintained. OEM accessory drives must be maintained, except for removal of Air Conditioning Compressors and Supplemental A.I.R. pumps. Shorter drive belts and/or idler pulleys may be utilized. OEM overbore replacement pistons may be utilized. ABS brake systems must be disabled by disconnecting a front wheel speed sensor. An additional rear brake proportioning valve may be added. Factory fuel tanks may be utilized. Roll cages in existing cars must meet or exceed 2003 TCS specifications. Newly constructed cars must meet ASCS roll cage requirements. A .060 in. thick SIR may be added to maintain performance parity within the class. Max. Tire Size: 275, Max. Wheel Size:17 x 9. Any final drive ratio and LSD permitted. Stock brakes must be retained when using authorized wheels larger than 16 x 8. Installation of ASedan specification brakes requires the use of 16 x 8 wheels.

AS	Wheel-base	Gear Ratios Std. (or Alt.)	Brakes (Max) (in/mm)	Weight (lbs)	Notes:
Mustang Cobra (99-02) Restricted Prep.	101.3	3.37, 1.99, 1.33, 1.00, 0.68	(F) 330 Vented Disc (R) 296 Vented Disc	3680	Cars shall be prepared to ASCS except that engines and transmissions/final drives must comply with TCS sections 9.1.10.D, 9.1.10.D.1, 9.1.10.D.4. Exhaust systems may be modified per ASCS specifications except OEM manifolds must be maintained. OEM engine/transmission mounts must be maintained. OEM accessory drives must be maintained, except for removal of Air Conditioning Compressors and Supplemental A.I.R. pumps. Shorter drive belts and/or idler pulleys may be utilized. OEM overbore replacement pistons may be utilized. ABS brake systems must be disabled by disconnecting a front wheel speed sensor. An additional rear brake proportioning valve may be added. Factory fuel tanks may be utilized. Roll cages in existing cars must meet or exceed 2003 TCS specifications. Newly constructed cars must meet ASCS roll cage requirements. A .060 in. thick SIR may be added to maintain performance parity within the class. Max. Tire Size: 275, Max. Wheel Size: 17 x 9. Any final drive ratio and LSD permitted. Stock brakes must be retained when using authorized wheels larger than 16 x 8. Installation of ASedan specification brakes requires the use of 16 x 8 wheels.
Mustang Incl. Cobra (99-04)	101.3	2.95, 1.94, 1.34, 1.00, 0.63 or 3.35, 1.99, 1.33, 1.00, 0.68	12.2 x *1.27* Disc	*3230* Over 313 CID *3530*	Cobra R bodywork and independent rear suspension not permitted. '94-'95 Mustang K-mamber may be used to facilitate installation of 302 engine. Under no circumstances is the '99-'00 K-member to be modified. Hydro boost braking system is not permitted. Any 1994, and up, Mustang vacuum assisted braking system shall be used. Engine built to A/S Build Sheet specifications with the following: Head Casting #'s: F3ZE-AA (GT40), F1ZE-AA (GT-40), F77E-AA (GT-40P) Port Volume (Max.): 143.00cc IN/54.00cc EX (GT-40 & GT-40P) Edelbrock Cylinder Head Part #'s 602579, 602479 may be used with a *150* lb. weight penalty.
Mustang Mach 1 (03-04) Restricted Prep.	101.3	3.38, 2.00, 162, 1.27, 1.00, 0.79	(F) 330 Vented Disc (R) 296 Vented Disc	3480	Cars shall be prepared to ASCS except that engines and transmissions/final drives must comply with TCS sections 9.1.10.D, 9.1.10.D.1, 9.1.10.D.4. Exhaust systems may be modified per ASCS specifications except OEM manifolds must be maintained. OEM engine/transmission mounts must be maintained. OEM accessory drives must be maintained, except for removal of Air Conditioning Compressors and Supplemental A.I.R. pumps. Shorter drive belts and/or idler pulleys may be utilized. OEM overbore replacement pistons may be utilized. ABS brake systems must be disabled by disconnecting a front wheel speed sensor. An additional rear brake proportioning valve may be added. Factory fuel tanks may be utilized. Roll cages in existing cars must meet or exceed 2003 TCS specifications. Newly constructed cars must meet ASCS roll cage requirements. A .060 in. thick SIR may be added to maintain performance parity within the class. Max. Tire Size: 275, Max. Wheel Size: 17 x 9. Any final drive ratio and LSD permitted. Stock brakes must be retained when using authorized wheels larger than 16 x 8. Installation of ASedan specification brakes requires the use of 16 x 8 wheels.
Mustang GT (05-09)	107.1	3.38, 2.00, 1.32, 1.00, .675 or 2.95, 1.94, 1.34, 1.00, 0.63	12.2 x *1.27* Disc	*3230* Over 313 CID *3530*	Engine/transmission installation procedure as provided by SCCA Club Racing shall be utilized. Engine built to A/S Build Sheet specifications with the following: Head Casting #'s: F3ZE-AA (GT40), F1ZE-AA (GT-40), F77E-AA (GT-40P) Port Volume (Max.): 143.00cc IN/54.00cc EX (GT-40 & GT-40P) Edelbrock Cylinder Head Part #'s 602579, 602479 may be used with a *150* lb. weight penalty.

AS	Wheel-base	Gear Ratios Std. (or Alt.)	Brakes (Max) (in/mm)	Weight (lbs)	Notes:
Mustang Coupe GT (05-09) Restricted Prep.	107.1	3.38, 2.00, 1.32, 1.00, 0.68	(F) 335 Vented Disc (R) 300 Vented Disc	3480	Cars shall be prepared to ASCS except that engines and transmissions/final drives must comply with TCS sections 9.1.10.D, 9.1.10.D.1, 9.1.10.D.4. Exhaust systems may be modified per ASCS specifications except OEM manifolds must be maintained. OEM engine/transmission mounts must be maintained. OEM accessory drives must be maintained, except for removal of Air Conditioning Compressors and Supplemental A.I.R. pumps. Shorter drive belts and/or idler pulleys may be utilized. OEM overbore replacement pistons may be utilized. ABS brake systems must be disabled by disconnecting a front wheel speed sensor. An additional rear brake proportioning valve may be added. Factory fuel tanks may be utilized. Roll cages in existing cars must meet or exceed 2003 TCS specifications. Newly constructed cars must meet ASCS roll cage requirements. A .060 in. thick SIR may be added to maintain performance parity within the class. Max. Tire Size: 275, Max. Wheel Size: 17 x 9. Any final drive ratio and LSD permitted. Stock brakes must be retained when using authorized wheels larger than 16 x 8. Installation of ASedan specification brakes requires the use of 16 x 8 wheels.
Capri (79-86)	100.4	3.07, 1.72, 1.00, 0.70 or 2.95, 1.94, 1.34, 1.00, 0.63 or 3.35, 1.99, 1.33, 1.00, 0.68	12.2 x *1.27* Disc	*3030* Over 313 CID *3330*	Permitted: Rear disc brake kit (M-2300-C) and/or 5-lug kit (M-2300-F). Engine built to A/S Build Sheet specifications with the following: Head Casting #'s: F3ZE-AA (GT40), F1ZE-AA (GT-40), F77E-AA (GT-40P) Port Volume (Max.): 143.00cc IN/54.00cc EX (GT-40 & GT-40P) Edelbrock Cylinder Head Part #'s 602579, 602479 may be used with a *150* lb. weight penalty.
GTO (04-06) Restricted Prep.	109.8	2.97, 2.07, 1.43, 1.00, 0.84, 0.57	(F) 320 Vented Disc (R) 286 Vented Disc	LS1: *3480* LS2: 3530	Cars shall be prepared to ASCS except that engines and transmissions/final drives must comply with TCS sections 9.1.10.D, 9.1.10.D.1, 9.1.10.D.4. Exhaust systems may be modified per ASCS specifications except OEM manifolds must be maintained. OEM engine/transmission mounts must be maintained. OEM accessory drives must be maintained, except for removal of Air Conditioning Compressors and Supplemental A.I.R. pumps. Shorter drive belts and/or idler pulleys may be utilized. OEM overbore replacement pistons may be utilized. ABS brake systems must be disabled by disconnecting a front wheel speed sensor. An additional rear brake proportioning valve may be added. Factory fuel tanks may be utilized. Roll cages in existing cars must meet or exceed 2003 TCS specifications. Newly constructed cars must meet ASCS roll cage requirements. A .060 in. thick SIR may be added to maintain performance parity within the class. Max. Tire Size: 275, Max. Wheel Size: 18 x 8.5. Any final drive ratio and LSD permitted. Stock brakes must be retained when using authorized wheels larger than 16 x 8. Installation of ASedan specification brakes requires the use of 16 x 8 wheels. *Up to 2.0 degrees rear negative camber allowed. Poly GTO engine mounts - Rev Shift 95A part #PMM-GTO; Poly GTO transmission mount - SCSS (no part number).*

Notes:

www.racelabz.com

SCCA CLUB RACING SPECIALISTS

Racing · Prep · Fabrication · Sales

RaceLabz has become a household name in the club racing world. From complete turn-key racecars and custom rollcage installations to suspension setup and driver coaching, **RaceLabz** is your source for championship winning performance. Stop wondering why, give us a call! Let us help you take your driving and vehicle's performance to the next level.

➤ Custom Rollcage Installation
- *Complete Custom Cage installations*
- *Custom seat location & fitted door bars*

➤ Showroom Stock Racecars
- *Turnkey SSB & SSC racecars*
- *New build, New safety equipment*

➤ Track Support & Rentals
- *Trackside support*
- *Arrive & Drive racecar rentals*

➤ Driver Coaching
- *Championship winning driver coaching*
- *Test Day ride along, Data, Analysis*

➤ Vehicle Suspension Setup
- *4-Wheel Alignment & Corner weight*
- *Complete setup & development*
- *Dyno Services*

➤ Wholesale Cars & Parts
- *Salvage, Theft & Pre-Owned Cars*
  - *> Buy wholesale & Save $$$*
- *Wholesale OEM Factory Used Parts*
  - *> Hard to find Engines, Trans, etc*

Contact us today at: **570-655-7272 · info@RaceLabz.com**

A LIPPERINI COMPANY

INTRODUCTION SSCS

These specifications are presented as an adjunct to your Factory Shop Manual. They are not meant to supersede the information that is in your manual that legitimately applies to your make, model, and year of car, with the exception of the following items. TIRE SIZES, RIM WIDTHS, SPRINGS, SWAY BAR(S), AND PERFORMANCE EQUIPMENT. In the case of the foregoing exceptions, the SSS will have priority. Voids or mistakes that may occur in the SSCS do not allow you to change your vehicle to conform to the SSCS.

These specifications reflect the best information available at the time of publication. Any error found in this edition will be updated when reliable specifications are available from the factory/factory distributor or other sources recognized by SCCA, Inc.

No interchange or updating or backdating of parts or specifications between models or model years is permitted even though they may appear on the same line. A model is defined as a unique car configuration which can be identified by means of decoding the Vehicle Identification Number.

9.1.7. SHOWROOM STOCK CATEGORY

These specifications are part of the SCCA GCR and all automobiles shall conform to GCR Section 9.

A. Definition

The Showroom Stock Category shall be considered primarily as a form for the membership to race street stock automobiles. Eligibility of cars may be discontinued at any time, for any reason other than competitive stature. The proof of legality or illegality shall rest upon the protester and/or protestee.

NOTE: Showroom Stock category cars shall be in compliance with Federal Standards, specifically ARB and EPA certifications, and as specified for each automobile listed on its Showroom Stock Specification (SSCS) line and as permitted by these rules. A Shop Manual or its equivalent for the specific make, model, and year of automobile is required to be in the possession of each entrant. Factory Shop/Service Manuals may come in the form of printed material, microfiche, CDs, DVDs and/or Internet access to manufacturer sponsored web-based databases. It is the responsibility of the competitor to provide the electronic device capable of accessing the data for compliance verification. If Factory Shop/Service Manuals are not available, then the competitor shall have a copy of the official SCCA Vehicle Technical Sheet (VTS) with them at every event and shall present it for reference when officially requested. The manual is intended to aid Scrutineers in identifying parts and the configuration of the automobile. Overhaul procedures that in the slightest way would increase performance are not to be utilized; e.g., milled heads/blocks, porting, etc. Blueprinting and balancing are inconsistent with the philosophy of this class and are not permitted.

B. Automobile Eligibility

Only those cars listed each year are eligible to compete. *Cars will be eligible for competition from the time they are classified until the end of the twelfth calendar year of competition of the latest model year listed on the specification line.* No updating or backdating of cars, models, specifications, and/or components thereof shall be permitted. Additions and deletions of automobiles shall be at the discretion of the SCCA. The vehicle identification number (VIN) shall correspond with the model automobile classified. *At least one* VIN plate or stamping shall remain in place *on the dashboard or chassis* that correspond*s* with the model automobile

classified The tenth (10) position letter of the VIN determines the model year of the car ("W" = 1998, "X" = 1999, "Y" = 2000, "1" = 2001, "2" = 2002, "3" = 2003, etc.).

C. Classification

Automobiles eligible for competition shall be divided into two (2) classes at the discretion of the SCCA. These classifications will be reviewed on an annual basis and will be effective as of January 1st.

The classes are as follows: SSB and SSC.

D. Technical and Safety Items

The following represent the only safety items and modifications permitted and required on automobiles involved in Showroom Stock competition. Cars must meet comply with the GCR and the SSCS. The addition of safety items not specifically listed is not permitted. No permitted component/modification shall additionally perform a prohibited function.

1. Roll cages shall be contained entirely within the driver/passenger compartment. Carpet/padding may be cut for roll cage installation. Front and rear braces may pass through interior trim panels. The front or side hoops may extend through the dash pad. This includes the forward part of the door if it is an extension of the dash pad.

2. Installation of a fire extinguisher or fire system as specified in GCR 9.3 Fire System.

3. Installation of a safety harness system as specified in Section 9.3 Driver's Restraint System of the GCR.

4. Cars with convertible tops shall have them stowed as provided by the manufacturer. Removable hardtops, unless required by specification line, or roof panels and hatchback privacy covers shall be completely removed from cars that are so equipped. Sunroofs, removable roof panels and "T" tops are permitted only if installed by the manufacturer of the vehicle. Sunroofs must be retained on the vehicle and securely bolted in place unless operating rails adequately secure the panel.

   Hardtops: If a hardtop is required, it shall be the original equipment hardtop from the vehicle manufacturer unless an alternate part number or manufacturer is listed on the vehicle spec line.

5. All cars shall run with both front door windows fully open (down) and shall have driver's side window safety net per GCR 9.3 Window Safety Nets. Any cars where a window safety net cannot be installed, arm restraints shall be used. Arm restraints are not an acceptable substitute for window nets in other cars. Window safety nets shall be mounted in such a manner to provide protection in the event the driver's door opens.

6. Passive restraint systems shall be deactivated. *

7. Air bag systems shall be disarmed and may be removed.* If so equipped, the rolling door lock mechanism may be deactivated by unplugging the components.

* If car is to be used on public roads, we recommend that these items be reactivated/rearmed/replaced when not in competition.

8. The driver's seat (only) shall be replaced with a one-piece bucket-type race seat. Factory seat tracks/brackets may be modified, reinforced, and/or removed to facilitate replacement mountings provided they perform no other function.

9. Steering lock mechanisms may be removed or disabled.

10. An electrical master switch may be installed.

E. Vehicle Preparation

The following represents the only items authorized in the preparation of a vehicle for Showroom Stock competition other than safety items as required in Section 9.1.7.D. Modifications shall not be made unless specifically authorized herein. No permitted component/ modification shall additionally perform a prohibited function.

1. Appearance shall be neat and clean. Automobiles that are dirty either externally or in the engine or passenger compartments, or that show bodywork damage or that are partially or totally in primer, or that do not bear the prescribed identification marks shall not be approved for competition. Vehicles may be painted any color(s).
2. Towing eyes per GCR Section 9.3 Towing Eyes, shall be fitted.
3. Hubcaps, wheel trim rings, jack, and tools shall be removed.
4. All mud flaps shall be removed.
5. Spare wheels and tires may be removed. Spare tire covers and trunk mats and/or trunk carpeting shall be removed if they present a hazard as a loose flying or flapping object.
6. All adjustments shall be at the manufacturer's specification and/or within the manufacturer's specified tolerances
7. Tires: All cars shall run the tire size as listed for the vehicle in the SSCS or an authorized replacement size. When authorized replacement tires are used, the same size of tire shall be used on each axle (front tires need not be the same size as rear tires).

   Tires must conform to 9.3.45. All tires shall be offered for sale over the counter through the manufacturer's tire dealer network. The brand of tire and tire pressures are unrestricted.

   For size determination, the molded section shall be used. All cars are allowed a section increase of 10 mm or 20 mm (e.g., 195 may use 205 or 215). All cars are allowed an aspect ratio increase or decrease of 5 or 10 (e.g., 55 may use 45, 50, 60 or 65). All cars listed with an aspect ratio of 75 or higher may use an aspect ratio.
8. Wheels: Wheels shall be standard equipment for the make, model, and year of automobile, or as listed in the SSCS and approved by ARB and EPA certification for that automobile. All four (4) wheels shall be the same style and material. *Cars equipped with lug bolts may convert to wheel studs and lug nuts.*
9. Radios and air conditioners are the only options permitted and may be non-manufacturer, standard equipment, or except as shown for each car in the SSCS. Two-way radios may be used. Hand controls are allowed in those instances where the driver can demonstrate the physical need for them.
10. Fuel, coolant, oil fluid hoses and clamps, oil filters, fuel filters, and belts (fan, alternator, etc.) may be substituted with others of equivalent OEM specifications.
11. Brake fluid: May be substituted with other equivalent OEM specification.
12. Lubricants: Lubricants may be substituted with any lubricant. Additives are unrestricted.
13. Spark Plugs: Authorized spark plugs listed in spark plug manufac-

turer's Application Charts, Owners Manual, Official Factory Shop Manual, or equivalent OEM justified by one cross reference chart. Use of resistor or non- resistor type spark plug allowed.

14. "Special performance" specifications from the manfacturer that go beyond those listed on a specification line for a car will not be considered valid.

    Any manufacturer determined to be supplying false specifications to competitors or to SCCA will be advised that the specifications shall be withdrawn or the eligibility of the car(s) involved will be terminated. The Club Racing Board is authorized to implement these terminations on an immediate basis without the Board of Directors' approval.

    In the case of service circulars, recalls, etc., the burden of proof of validity will be upon the competitor.

15. Ride height: Ride heights specified in the SSCS will be used as a guideline only. If there is a discrepancy, more detailed inspection will be necessary.

16. Batteries may be replaced with those of alternate manufacture provided they are of similar amp-hour capacity and weight.

17. Weight: The minimum weight as listed on the SSCS line is with driver and required ballast. If a cool suit system is utilized, the cool suit system shall be weighed with the car as it came off the track.

18. Fuel: Only the fuel type specified by the Owner's and/or Factory Service Manual may be used. Refer to GCR Section 9.3 Fuel for permitted fuel specifications.

19. Removal of Air Conditioning System: The factory and/or after market air conditioning systems may be removed provided that at least the following items associated with the system are also removed: compressor, condenser, H.D. radiator, H.D. springs/sway bars, H.D. shocks, larger tires, engine and transmission oil coolers, and cooling fans. All ductwork, wiring, Freon lines, valves, evaporators, and dryers may remain. Items that serve a dual purpose, such as the alternator/air conditioning compressor bracket, may not be substituted.

20. Removal of radio and speaker components is permitted.

21. A radiator screen of one-fourth (1/4) inch minimum mesh may be added in front of the radiator and contained within the bodywork.

22. Air filter elements may be substituted with other air filters of equivalent specifications and fit in the stock location with no modifications. Must be substantiated by a minimum of one (1) manufacturer cross-reference for specific vehicle application.

23. Brake pad/lining of any manufacture may be used.

24. Stock replacement brake rotors may be obtained from sources other than the manufacturer provided they are the exact equivalent of the stock rotors.

25. The Club Racing Board may approve the use of automatic transmissions and/or hand controls on a case-by-case basis.

26. Interior mirror(s) may be replaced with a multi-panel type mirror, but shall not extend beyond the confines of the interior.

27. Exhaust system may be removed and or modified within the

following parameters:

A. Any part of the exhaust system beyond the catalytic converter(s) may be replaced provided:

1. Said replacement system retains the same original configuration, e.g., routing, single, dual, etc.

2. The system exits from beneath the body in the same approximate location(s) as the original. When a factory (OEM) single exhaust system is cosmetically split into dual outlets, it is permitted to continue as a single system provided it exits in approximately the same location as one of the originals.

3. The system meets all appropriate event-specific sound level requirements.

28. Aftermarket steering wheels, and their required mounting modifications, are permitted.

29. Lap Timing and Data Acquisition Devices:
Lap timing devices that perform no function other than to relay lap times to the driver (Longacre Hot Lap, Intercomp Lap Timer, etc.) are permitted, along with the required mounting hardware and connections. Stand-alone data acquisition systems (GPS or accelerometer based) are allowed. No additional sensors may be added, and the data acquisition system must not tie into the vehicle's electronics.

30. Sunroofs, Targa tops, and T-tops are only permitted if installed by the manufacturer of the vehicle. If installed they must be retained on the vehicle, run in the closed position, and securely bolted in place unless the operating rails adequately secure the panel. Glass panels are permitted.

31. Hatchback "privacy covers" shall be completely removed.

32. Cosmetic plastic engine covers may be removed.

33. Stock brake hoses may be replaced by stainless steel brake lines.

F. Competition Adjustments

If ballast is required as a competition adjustment or to compensate for a driver's weight, ballast may be added.

1. All specified ballast shall be securely mounted in the passenger footwell of the vehicle, aft of the firewall and any footwell angle, and forward of the passenger seat unless otherwise so permitted on the vehicle's SSCS line.

2. It shall be in segments no lighter than ten (10) pounds and no heavier than fifty (50) pounds, and shall be capable of being weighed apart from the vehicle.

3. Each segment shall be fastened with a minimum of two (2) one-half (1/2) inch bolts and positive lock nuts of SAE Grade 5 or better, and shall utilize large diameter, load distributing washers.

4. Holes may be drilled in the passenger footwell floorpan for the purposes of mounting the ballast (only), and said floorpan may be reinforced as required for the same purpose.

If sufficient competition adjustments cannot be achieved safely with ballast, intake restriction may be specified. This will be listed on the cars SSCS line.

SSB	Bore x Stroke(mm)/ Displ. (cc)	Wheel-base (mm)	Track F & R (mm)	Wheel Size(in.)/ Mat'l.	Tire Size (stock)	Gear Ratios	Final Drive	Brakes (mm)	Weight (lbs)	Notes:
Acura Integra GS-R VTEC (3 or 4 door) (95-01)	81.0 x 87.2 1797	2571	1476 / 1471 or 1481 / 1476 w/ alt. Susp.	15 x 6 Alum	195/55	3.23, 1.90, 1.36, 1.03, 0.79	4.4	(F) 262 x 21 Vented Disc (R) 239 x 10 Solid Disc	2725	Springs (F) P/N 51401-ST7-R01, (R) P/N 52441-ST7-R01, Shocks P/N (LF) 51606-ST7-R01, (RF) 51605-ST7-R01, (Rear) 52611-ST7-R01, Shock bushings (R) P/N 52622-SR3-003, rear control arms P/N (LR) 52360-ST7-R00, (RR) 52350-ST7-R00 from Type R, and Mugen 26mm rear sway bar.
Acura RSX Type-S (02-04)	86.1 x 86.0 1988	2570	1482 / 1481	16 x 6.5 Alum	205/55	3.27, 2.13, 1.52, 1.15, 0.92, 0.74	4.4	(F) 300 x 26 Vented Disc (R) 260 x 10 Solid Disc	2895	Factory limited slip from 06-08 Civic Si, P/N 41200-PNT-003 permitted.
Acura RSX Type-S (05-06)	86.0 x 86.0 1998	2570	1487 / 1486	17 x 7 (F&R)	215/45 (F&R)	3.27, 2.13, 1.52, 1.15, 0.92, 0.74	4.765	(F) 300 Vented Disc (R) 260 Solid Disc	2995	Factory limited slip from 06-08 Civic Si, P/N 41200-PNT-003 permitted.
Audi A4 V-6 (96-01)	82.5 x 86.4 2771	2606	1496 / 1473	16 x 7 Alum	205/55	3.67, 1.99, 1.41, 1.00, 0.74	3.2	(F) 277 x 25 Vented Disc (R) 244 x 15 Solid Disc	3055	
BMW Z4 2.5L (03-05)	84.0 x 75.0 2494	2495	1473 / 1524	16 x 7 Alum	225/50	4.23, 2.52, 1.66, 1.22, 1.00	3.46	(F) 286 Vented Disc (R) 280 Solid Disc	*3195*	Detachable hardtop shall be installed (latches shall be replaced w/ positive fasteners), convertible top shall be removed. Alternate wheel BMW #36-11-1-095-058 16 x 7 is permitted.
Chevrolet Camaro V-6 (96-02)	96.5 x 86.36 3790	2568	1552 / 1549	16 x 8	245/50	3.75, 2.19, 1.41, 1.00, 0.72	3.42	(F) 302 x 23 Disc (R) 305 x 25 Disc	*3300*	Performance option permitted, consisting of limited slip differential, uplevel steering rack, dual exhaust. GM PS cooler #10417037 allowed. Z-28 front sway bar (30mm) and rear sway bar (19mm) allowed. GM 1LE front (#26032907 32mm) and rear (#10021221 21 mm) sway bar allowed. Front spring rate shall be 280-320 lbs. per inch and the minimum free length is 13 ¾ inches. *Koni Shocks, 8241-1139 (F) and 8241-1140 (R) permitted.*
Ford Contour SVT (98-00)	82.4 x 79.5 2544	2705	1504 / 1486	16 x 6.5 Alum	1998: 205/55 99-00: 215/50	3.42, 2.14, 1.45, 1.03, 0.77	4.06	(F) 279 Disc (R) 251 Disc	3180	

SSB	Bore x Stroke(mm)/ Displ. (cc)	Wheel-base (mm)	Track F & R (mm)	Wheel Size(in.)/ Mat'l.	Tire Size (stock)	Gear Ratios	Final Drive	Brakes (mm)	Weight (lbs)	Notes:
Ford Mustang V-6 (01-04)	96.8 x 86.0 3797	2573	1529 / 1539	16 x 7.5 Alum	225/55	3.37, 1.99, 1.33, 1.00, 0.67	3.27		3240	Ford Positrac LSD, part # M-4204-C75, premium trim package 012A allowed (ABS, traction control, 16 x 7.5 forged or cast aluminum wheels).
Ford Mustang V6 (05-*10*)	100.4 x 84.4 4000	2724	1582.5 1587.5	16 x 7 17 x 8 (F&R)	245/40 (max tire size)	3.75, 2.19, 1.41, 1.00, 0.72	3.31	(F) 292.1 Vented Disc (R) 299.8 Vented Disc	*3450*	ABS (option code 552) allowed. FR3 Handling Pack # M-2007-FR3V6 allowed. The kit includes: Dampers M-18000-A, Lowering Springs M-5300-N, Sway Bars M-5490-C, Strut Tower Brace M-20201-F. *The ECU may be re-flashed by a Ford dealer to disable the speed limiting function; a letter from the dealer stating that this, and only this change, has been made shall be made available to race officials on demand. Ford Positraction LSD part #M-4204-C75 is allowed.*
Honda Civic Si (06-09)	86.1 x 86.0 1998	2649	1499 / 1527	17 x 7 Alum	215/45	3.27, 2.13, 1.52, 1.15, 0.92, 0.66	4.77	(F) 300 Vented Disc (R) 260 Solid Disc	*3050*	Honda Factory Performance Suspension Kit #08W60-SVB-100 allowed.
Honda Prelude (Non-SH) (97-01)	87.0 x 90.7 2157	2585	1525 / 1515	16 x 6.5 Alloy	205/50	3.29, 1.96, 1.34, 1.03, 0.81	4.27	(F) 280 x 24 Vented Disc (R) 258 x 9 Solid Disc	2950	
Honda Prelude SH (97-01)	87.0 x 90.7 2157	2585	1525 / 1515	16 x 6.5 Alloy	205/50	3.29, 1.96, 1.34, 1.03, 0.81	4.27	(F) 280 x 24 Vented Disc (R) 258 x 9 Solid Disc	3030	
Mazda MX-5 / Miata Sport (99-00)	83.0 x 85.0 1839	2266	1435 / 1461	15 x 6	195/50	3.14, 1.89, 1.33, 1.00, 0.81	4.3	(F) 255 Vented Disc (R) 252 Solid Disc	2380	Rear interior brace may be removed for cage installation. As delivered w/ no performance kits or parts deletions. Detachable hardtop shall be installed (latches shall be replaced with positive fasteners), convertible top shall be removed. Spec Miata front and rear sway bar permitted. Rear sway bar must use middle hole. Allow Spec Miata suspension kit with the following perch measurements: *Front: top-1.75" bottom-1.75" Rear: top-1.50" bottom-2.00"* Measurements are taken from above(top)/below(bottom) the spring perch to the top/bottom of the collar. Spring perch settings must be locked with the set screw.

SSB	Bore x Stroke(mm)/ Displ. (cc)	Wheel-base (mm)	Track F & R (mm)	Wheel Size(in.)/ Mat'l.	Tire Size (stock)	Gear Ratios	Final Drive	Brakes (mm)	Weight (lbs)	Notes:
Mazda MX-5 / Miata (01-05)	83.0 x 85.0 1839	2266	15" wheel: 1435 / 1461 16" wheel: 1448 / 1474	16 x 6.5 Alum	15": 195/50 16": 205/45	3.14, 1.89, 1.33, 1.00, 0.81	4.3	(F) 254 Vented Disc (R) 252 Solid Disc Suspension Package: (F) 269.5 Vented Disc (R) 267.9 Solid Disc	2405	Factory "Sports" pkg. allowed. Optional Torsen limited slip differential allowed. Power steering delete option allowed. Detachable hardtop shall be installed (latches shall be replaced with positive fasteners), convertible top shall be removed. Spec Miata front and rear sway bar permitted. Rear sway bar must use middle hole. Allow Spec Miata suspension kit with the following perch measurements: Front: top-2.00" bottom-1.50" Rear: top-1.75" bottom-1.75" Measurements are taken from above(top)/below(bottom) the spring perch to the top/bottom of the collar. Spring perch settings must be locked with the set screw.
Mazda MX-5 (06-08)	87.38 x 83.06 1999	2329	1491 / 1496	16 x 6.5 17 x 7 Alum	205/50	3.14, 1.89, 1.33, 1.00, 0.81 or 3.82, 2.26, 1.64, 1.18, 1.00, 0.83	4.10	(F) 289.6 Vented Disc (R) 279.4 Solid Disc	MSR: 2650 Non-MSR: 2500	Detachable hardtop shall be installed (latches shall be replaced w/ positive fasteners), convertible top shall be removed. Factory bolt-in roll bar/cross member may be removed to facilitate roll cage installation. MSR option permitted.
Mazda MX-5 Touring/ Grand Touring *(09-11)*	87.4 x 83.1 2000	2330	1491/ 1497	17x7 Alum	205/45	3.82, 2.26, 1.64, 1.18, 1.00, 0.83	4.10	(F)290 Vented Disc (R)280 Solid Disc	*2600*	Optional suspension package permitted. MSR option permitted including Bilstein shocks (F) 0000-04-5991-BL, (R) 0000-04-5992-BL.
Mazda6 s (03-07)	89.0 x 79.5 2967	2675	1530 / 1520	16 x 7 17 x 7 18 x 7	205/60 215/45	3.80, 2.13, 1.36, 0.94, 0.69	3.71	(F) 282 Vented Disc (R) 280 Solid Disc	3360	Rear sway bar: Mazdaspeed #GRMS-8M-L06-R and front sway bar #GRMS-8M-L06-F permitted.

SSB	Bore x Stroke(mm)/ Displ. (cc)	Wheel-base (mm)	Track F & R (mm)	Wheel Size(in.)/ Mat'l.	Tire Size (stock)	Gear Ratios	Final Drive	Brakes (mm)	Weight (lbs)	Notes:
Mini Cooper S (02-04)	77.0 x 85.8 1598	2467	1453 / 1461	*Any stock wheel available allowed. Must have BMW or MINI identification. Entrant must supply proof that wheel was offered in USA from MINI in the form of a factory document.*	195/55 or 205/55	4.17, 2.62, 1.97, 1.61, 1.33, 1.09	2.74	(F) 277 Vented DIsc (R) 259 Solid Disc	2750	JCW struts (F)31 31 6 768 410 (R)33 52 6 768 412, springs (F)31 33 6 768 415 (R)33 53 6 768 418, and Mini Mania strut tower plate NMS7300 permitted. Factory limited slip from 05-06 Cooper S permitted. *Ireland Engineering Mini Cooper Fixed Camber Plates 4/2002-2006 part "minicamber" permitted.*

SSB	Bore x Stroke(mm)/ Displ. (cc)	Wheel-base (mm)	Track F & R (mm)	Wheel Size(in.)/ Mat'l.	Tire Size (stock)	Gear Ratios	Final Drive	Brakes (mm)	Weight (lbs)	Notes:
Mini Cooper S (05-06)	77.0 x 85.8 1598	2467	1453 / 1461	*Any stock wheel available allowed. Must have BMW or MINI identification. Entrant must supply proof that wheel was offered in USA from MINI in the form of a factory document.*	195/55 or 205/55	overall: 12.79, 7.79, 5.65, 4.62, 3.83, 3.13	N/A	(F) 277 Vented DIsc (R) 259 Solid Disc	2750	Convertible model not allowed. Factory optional limited slip differential allowed. JCW struts (F)31 31 6 768 410 (R)33 52 6 768 412, springs (F)31 33 6 768 415 (R)33 53 6 768 418, and Mini Mania strut tower plate NMS7300 permitted. *Ireland Engineering Mini Cooper Fixed Camber Plates 4/2002-2006 part "minicamber" permitted.*
Mitsubishi Eclipse GT (00-05)	91.2 x 75.9 2972	2561	1509 / 1509	17 x 6.5	215/50	3.33, 2.10, 1.41, 1.03, 0.76	3.74	(F) 277 x 23 Vented Disc (R) 262 x 11 Solid Disc	3170	
Nissan Sentra Spec-V (07-08)	89.0 x 100.0 2488	2535	1466 / 1446	17 x 7 Alum	225/45	3.15, 1.94, 1.39, 1.06, 0.81, 0.63	4.13	(F) 305 Vented Disc (R) 278 Solid Disc	3190	Factory Brembo brakes allowed. OEM optional limited slip differential permitted.
Pontiac Firebird V-6 (96-02)	96.5 x 86.36 3790	2568	1542 / 1539	16 x 8	245/50	3.75, 2.19, 1.41, 1.00, 0.72	3.42	(F) 302 x 23 Disc (R) 305 x 25 Disc	*3300*	Performance option permitted, consisting of limited slip differential, uplevel steering rack, dual exhaust. GM PS cooler #10417037 allowed. Z-28 front sway bar (30mm) and rear sway bar (19mm) allowed. GM 1LE front (#26032907 32mm) and rear (#10021221 21 mm) sway bar allowed

SSB	Bore x Stroke(mm)/ Displ. (cc)	Wheel-base (mm)	Track F & R (mm)	Wheel Size(in.)/ Mat'l.	Tire Size (stock)	Gear Ratios	Final Drive	Brakes (mm)	Weight (lbs)	Notes:
Pontiac Solsitce (06-09)	88.0 x 98.0 2384	2415	1543 / 1561	18 x 8 Alum	245/45	3.75, 2.26, 1.37, 1.00, 0.73 or 3.75, 2.26, 1.51, 1.00, 0.73	3.91	(F) 296 Vented Disc (R) 278 Solid Disc	*2900*	Detachable hardtop GM part # PCS-0664 shall be installed (latches shall be replaced w/ positive fasteners), convertible top shall be removed. Limited slip differential (G80), factory ABS (JL), and suspension option (ZOK) allowed.
Toyota MR-2 Spyder 16V DOHC (01-05)	2001: 79.0 x 91.5 1794 02-03: 81.0 x 77.0 1587	2450	1475 / 1460	01-02: (F) 15 x 6 (R) 15x6.5 03-05: (F) 15 x 6 (R) 16 x 7	(F) 185/55 01-02(R) 205/50 03-05(R) 215/45	3.17, 1.90, 1.39, 1.03, 0.82	3.25		2370	Detachable hardtop shall be installed (latches shall be replaced w/ positive fasteners), convertible top shall be removed.
Toyota Matrix Matrix XRS (03-08)	82.1 x 85.1 1795	2601	1519 / 1497	17 Alum	215/50	3.17, 2.05, 1.48, 1.17, 0.92, 0.72	4.5	(F) 331 Vented Disc (R) 356 Solid Disc	2905	

SSC	Bore x Stroke(mm)/ Displ. (cc)	Wheel-base (mm)	Track F & R (mm)	Wheel Size(in.)/ Mat'l.	Tire Size (stock)	Gear Ratios	Final Drive	Brakes (mm)	Weight (lbs)	Notes:
Acura Integra GS-R VTEC (3 or 4 door) (*94*-01)	81.0 x 87.2 1797	2571	1476 / 1471	15 x 6 Steel or Alloy	195/55	3.23, 1.90, 1.36, 1.03, 0.79	4.4	(F) 262 x 21 Vented Disc (R) 239 x 10 Solid Disc	*2825*	
Acura Integra LS (3 door) (95-01)	81.0 x 89.0 1835	2571	(-99): 1476 / 1476 (00-): 1475 / 1470	(-99): 14 x 5.5 Alum (00-): 15 x 6 Alum	(-99): 195/60 (00-): 195/55	3.17, 1.86, 1.26, 0.94, 0.74	4.4	(F) 262 x 21 Vented Disc (R) 239 x 10 Solid Disc	2570	The pre-2000 cars may not update to the 2000 and up, specs.
Acura RSX (02-06)	86.1 x 86.0 1988	2570	1482 / 1481	16 x 6.5 Alum	205/55	3.27, 1.88, 1.21, 0.92, 0.74	4.4	(F) 262 x 21 Vented Disc (R) 260 x 9 Solid Disc	2825	
Chevrolet Cobalt SS Coupe (06-07)	88.0 x 98.0 2384	2628	1492 / 1475	17 x 7 Alum	205/50	3.58, 2.02, 1.35, 0.98, 0.69	3.94	(F) 296 Vented Disc (R) 270 Solid Disc	3100	
Chevrolet Cobalt Sport (2008)	88.0 x 98.0 2384	2628	1492 / 1475	17 x 7 Alum	205/50	3.58, 2.02, 1.35, 0.98, 0.69	3.84	(F) 296 Vented Disc (R) 270 Solid Disc	3100	
Chrysler Neon ACR SOHC (4 door) (01-02)	87.5 x 83.0 1995	2667	1474 / 1476	15 x 6 Alum	185/60	3.50, 1.96, 1.36, 0.97, 0.81	3.94	(F) 257 x 22 Vented Disc (R) 270 x 9 Solid Disc	2650	
Ford Focus ZX-3 (00-03)	84.0 x 88.0 1988	2616	1494 / 1486	15 x 5.5 16 x 6 Alum	195/60	3.67, 2.14, 1.45, 1.03, 0.77	3.82	(F) 259 x 23 Vented Disc (R) 203 x 31 Drum	2464	
Ford Escort ZX-2 SR (98-00)	84.0 x 88.0 1988	2499		15 Alloy	205/55				2630	Ford Motorsports performance package P/N M-5300-ZX2 is permitted.

SSC	Bore x Stroke(mm)/ Displ. (cc)	Wheel-base (mm)	Track F & R (mm)	Wheel Size(in.)/ Mat'l.	Tire Size (stock)	Gear Ratios	Final Drive	Brakes (mm)	Weight (lbs)	Notes:
Ford Escort ZX-2 (98-03)	84.0 x 88.0 1988	2499	1435 / 1435	15 x 5.5	185/60		4.1		2630	Ford Motorsports performance package P/N M-5300-ZX2 is permitted. Wheels: Enkei p/n ZXWM-132-146-49SM (14 x 6" w/35mm offset), Camber bolt kits: KMAC p/n 120116. ABS optional. Enkei Syle 135 and 227 are allowed alternate wheels to the ZXWM wheel.
Ford Focus SVT (02.5-04)	84.0 x 88.0 2000	2616	1494 / 1486	17 x 7 Alum	215/45	(overall) 12.7, 7.7, 5.7, 4.6, 3.8, 3.1	2.88 & 4.25	(F) 300 Vented Disc (R) 280 Solid Disc	2930	
Ford Focus ZX4 ST (05-06)	87.38 X 93.98 2300	2614	1496 / 1491	16 x 6	205/60	3.42, 2.14, 1.45, 1.03, 0.77	3.82	(F) 278 Vented Disc (R) 251 Solid Disc	2750	
Honda Accord LX & EX (03-05)	87.0 x 99.0 2354	2670	1552/ 1554	16 x 6.5	205/60	3.27, 1.77, 1.15, 0.87, 0.66	4.39	(F)282 Vent-ed Disc (R)259 Solid Disc	2985	LX model must use rear drum brakes.
Honda Accord LX & EX (06-07)	87.0 x 99.0 2354	2670	1553/ 1554	16 x 6.5	205/60	3.27, 1.77, 1.15, 0.87, 0.66	4.39	(F)282 Vent-ed Disc (R)259 Solid Disc	3030	LX model must use rear drum brakes.
Honda Accord LX-S/EX/EX-L (08-09)	87.0 x 99.0 2354	2741	1580 / 1580	17 x 7.5	225/50	3.27, 1.78, 1.15, 0.87, 0.65	4.39	(F) 282 Vented Disc (R) 282 Solid Disc	3300	
Honda Civic Coupe (96-00)	75.0 x 90.0 1590	2621	1476 / 1476	14 x 4.5	185/65	3.25, 1.90, 1.25, 0.91, 0.70	4.25	(F) 262 Vented Disc (R) 201 Drum	2500	Honda Motorsports performance package (#17D50-S02-C1) permitted. Performance kit includes: Shocks (F): Koni #8042-1001, Shocks (R): Koni #8042-1002, Springs (F): Eibach Kit #9328.140, 350# rate, Springs (R): Eibach Kit #9328.140, 500# rate, Swaybar (R): Neuspeed #H43.22.72, 22mm, Camber: +/- 2° from service manual specs, Wheels: Enkei #ENK13214649SM, 14 x 6".

SSC	Bore x Stroke(mm)/ Displ. (cc)	Wheel-base (mm)	Track F & R (mm)	Wheel Size(in.)/ Mat'l.	Tire Size (stock)	Gear Ratios	Final Drive	Brakes (mm)	Weight (lbs)	Notes:
Honda Civic Coupe Si (99-00)	81.0 x 77.4 1595	2621	1476 / 1476	15 x 6	195/55	3.23, 2.11, 1.46, 1.11, 0.85	4.4	(F) 262 x 20 Disc (R) 239 x 8 Disc	2730	Camber: +/- 2° from service manual specs. Honda Motorsports rear sway bar kit P/N 29-3910, effective 09/01/00 the referenced parts must be replaced in their entirety. If sway bar kit (P/N 29-3910) is delivered with more than one (1) hole en each end of the sway bar, the center hole shall be used.
Honda Civic SI (02-03)	86.0 x 86.0 1998	2570	1468 / 1469	*15* x 6.5 Alum	195/60	3.06, 1.77, 1.21, 0.92, 0.74	4.50	(F) 262 (R) 260	2700	
Hyundai Tiburon V-6 (03-*08*)	86.7 x 75.0 2657	2530	1490 / 1490	17 x 7 Alum	215/45	3.15, 1.94, 1.33, 1.06, 0.86, 0.70	4.43	(F) 280 x26.2 Vented Disc (R) 257x10.0 Solid	3290	
Kia Forte Koup and Sedan LX/ EX (2010-)	*86.0 x 86.0 1998*	*2649*	*1560/ 1565*	*17 x 6 Alloy*	*205/55*	*3.31, 1.97, 1.19, 0.90, 0.70*	*4.19*	*(F) 280 Vented (R) 262 Solid*	*2790*	
Kia Forte Koup and Sedan SX (2010-)	*88.0 x 97.0 2359*	*2649*	*1560/ 1565*	*17 x 7 Alloy*	*215/45*	*3.27,1.93, 1.64, 1.22, 1.03, 0.83*	*4.06 (1, 2) 2.96 (3, 4, 5, 6)*	*(F) 300 Vented (R) 262 Solid*	*3170*	
Mazda3 s (04-09)	87.5 x 94.0 2260	2639	1529 / 1514	16x6.5 or 17x6.5	205/50 or 205/55	3.31, 1.84, 1.31, 0.97, 0.76	4.1	(F) 300 Vented DIsc (R) 280 Solid Disc	2850	ABS option allowed. Miata speedometer gear #M527-17-400A permitted.
Mazda3 s (2010)	89.0 x 100.0 2489	2640	1530 / 1514	17 x 7	205/50	3.45, 2.06, 1.39, 1.03, 0.84, 0.72	4.11	(F)300 Vent-ed Disc (R)280 Solid Disc	3115	

SSC	Bore x Stroke(mm)/ Displ. (cc)	Wheel-base (mm)	Track F & R (mm)	Wheel Size(in.)/ Mat'l.	Tire Size (stock)	Gear Ratios	Final Drive	Brakes (mm)	Weight (lbs)	Notes:
Mazda Protégé LX (01-03)	83.0 x 92.0 1991	2610		15 x 6 Alum		3.31, 1.84, 1.31, 0.97, 0.76	4.11	(F) 259 x 23 Vented Disc (R) 201 x 36 Drum	2730	LX may update to the ES brakes. May update to MP3 specs.
Mazda Protégé ES (99-00)	83.0 x 85.0 1839	2611	1471 / 1471	15	195/55	3.42, 1.84, 1.29, 1.03, 0.78	4.11	(F) 260 Vented Disc (R) 201 Drum	2630	Mazda Performance Package P/N K-PRO-99-SSC (Includes: Bilstein strut cartridges front and rear (p/n P30-0032), Eibach 2.5" diameter ERS springs front (325lbs, 7" free length) and rear (600lbs, 8" free length), front negative camber –2 degrees.) ABS brakes permitted.
Mazda Protégé ES (01-03)	83.0 x 92.0 1991	2610		16 x 6 Alum		3.31, 1.84, 1.31, 0.97, 0.76	4.11	(F) 259 x 23 Vented Disc (R) 259 x 23 Vented Disc	2730	May update to MP3 specs.
Mazda Protégé MP3 (2001)	83.0 x 92.0 1991	2610	1455 / 1460	17 x 7 Alum	205/45	3.31, 1.84, 1.31, 0.97, 0.76	4.11	(F) 10.2 x .9 Vented Disc (R) 10.3 x .9 Solid Disc	2780	
Mazda Protégé 5 (02-03)	83.0 x 92.0 1991	2610	1465 / 1470	16 x 6 Alum	195/50	3.31, 1.84, 1.31, 0.97, 0.76	4.11	(F) 10.2 x .9 Vented Disc (R) 10.3 x .4 Solid Disc	2745	
Mini Cooper (02-03)	77.0 x 85.8 1598	2467	1458 / 1466	15 x 5.5 16 x 6.5 Alum	175/65 or 205/55 (max) (F&R)	3.42, 1.95, 1.33, 1.05, 0.85	4.0	(F) 276 x 22 Vented Disc (R) 239 x 10 Solid Disc	2655	228 "Sport" suspension package permitted. This max. tire size supersedes SSCS section 9.1.7.E.7.
Mini Cooper (04-07)	77.0 x 85.8 1598	2467	1458 / 1466	15 x 5.5 16 x 6.5 Alum	175/65 or 205/55 (max) (F&R)	overall: 14.4, 8.33, 5.48, 4.11, 3.51	N/A	(F) 276 x 22 Vented Disc (R) 239 x 10 Solid Disc	2555	This max. tire size supersedes SSCS section 9.1.7.E.7. Limited slip and convertible not allowed.
Mitsubishi Lancer GTS (2009)	88.0 x 97.0 2360	2635	1530 / 1530	18 x 7 Alum	215/45	3.54, 1.91, 1.33, 0.97, 0.78	4.24	(F) 294 Vented Disc (R) 302 Solid Disc	3150	

SSC	Bore x Stroke(mm)/ Displ. (cc)	Wheel-base (mm)	Track F & R (mm)	Wheel Size(in.)/ Mat'l.	Tire Size (stock)	Gear Ratios	Final Drive	Brakes (mm)	Weight (lbs)	Notes:
Nissan Sentra SER (02-03)	89.0 x 100.0 2488	2535	1476 / 1455	16 x 6	195/55	3.15, 1.84, 1.26, 0.95, 0.77	4.133	(F) 280 x 22 Vented Disc (R) 258 x 9 Solid Disc	2860	
Nissan Sentra SER Spec-V (02-04)	89.0 x 100.0 2488	2535	1466 / 1446	17 x 7 Alum	215/45	3.15, 1.94, 1.39, 1.06, 0.81, 0.63	4.13	*(F) 280 x 22 Vented Disc (R) 232 x 7 Solid Disc*	3100	
Nissan Sentra SER Spec-V (05-06)	89.0 x 100.0 2488	2535	1466 / 1446	17 x 7 Alum	215/45	3.15, 1.94, 1.39, 1.06, 0.81, 0.63	4.13	(F) 305 Vented Disc (R) 278 Solid Disc	3150	Factory Brembo brakes allowed.
Pontiac Sunfire GT (2002)	90.2 x 94.0 2400	2645	1464 / 1438	16 Alum	205/55	3.27, 1.88, 1.21, 0.92, 0.74		(F) 259 x 22 Vented Disc (R) 201 x 53 Drum	2900	
Pontiac G5 GT (2007)	88.0 x 98.0 2385	2628	1492 / 1475	17 x 7 Alum	205/50	3.58, 2.02, 1.35, 0.98, 0.69	3.94	(F) 296 Vented Disc (R) 270 Solid Disc	3100	
Pontiac G5 GT (2008)	88.0 x 98.0 2384	2628	1492 / 1475	17 x 7 Alum	205/50	3.58, 2.02, 1.35, 0.98, 0.69	3.84	(F) 296 Vented Disc (R) 270 Solid Disc	3100	
Saturn SC2 Coupe (97-00)	82.0 x 90.0 1901	2601	1443 / 1422	15	195/60	3.25, 2.06, 1.42, 1.03, 0.73	4.06	(F) 251 Disc (R) 245 Disc (R) 200 x 30 Drum	2475	Saturn SSC performance package (SPS # PKG-SSC-9798). Performance kit includes: Shocks (F): Carerra #54165/31552B4, Shocks (R): Carerra #54166/32642B4, Springs (F): H&R #54341F, Springs (R): H&R #54341R, Swaybar (R): Sway-Away #19516, Camber: -2.5 Degrees max. (F&R), Wheels: .250" max. wheel spacer per wheel. ABS brakes permitted.
Saturn SC2 Coupe (01-03)	82.0 x 90.0 1901	2601	1443 / 1422	15	195/60	3.25, 2.06, 1.42, 1.03, 0.73	4.06	(F) 251 Disc (R) 245 Disc (R) 200 x 30 Drum	2300	ABS brakes permitted.

SSC	Bore x Stroke(mm)/ Displ. (cc)	Wheel-base (mm)	Track F & R (mm)	Wheel Size(in.)/ Mat'l.	Tire Size (stock)	Gear Ratios	Final Drive	Brakes (mm)	Weight (lbs)	Notes:
Saturn SL2 (97-00)	82.0 x 90.0 1901	2601	1443 / 1422	15	185/65 205/50 (max)	3.25, 2.06, 1.42, 1.03, 0.73	4.06	(F) 251 Disc (R) 245 Disc (R) 200 x 30 Drum	2560	Saturn SSC performance package (SPS # PKG-SSC-9798). Performance kit includes: Shocks (F): Carerra #54165/31552B4, Shocks (R): Carerra #54166/32642B4, Springs (F): H&R #54341F, Springs (R): H&R #54341R, Swaybar (R): Sway-Away #19516, Camber: -2.5 Degrees max. (F&R), Wheels: .250" max. wheel spacer per wheel. ABS brakes permitted. A max. tire size of 205/50 is permitted based on availability of performance tires; this max. size supersedes SS tire rule in SSCS section 9.1.7.E.7.
Saturn SL2 (01-03)	82.0 x 90.0 1901	2601	1443 / 1422	15	185/65	3.25, 2.06, 1.42, 1.03, 0.73	4.06	(F) 251 Disc (R) 245 Disc (R) 200 x 30 Drum	2560	ABS brakes permitted.
Scion tC (03-07)	88.5 x 96.0 2326	2700	1506 / 1506	17 x 7 Alum	215/45	3.54, 2.05, 1.33, 0.97, 0.78	4.24	(F) 275 Vented Disc (R) 269 Solid Disc	2900	
Subaru Impreza (non-turbo) (04-06)	99.5 x 79.0 2457	2524.8	1485.9 1480.9	16 x 6.5 (F&R)	205/55 (F&R)	3.45, 2.06, 1.45, 1.09, 0.78	4.11	(F) 274.3 Vented Disc (R) 261.6 Solid Disc	3135	
Toyota Celica GT (00-05)	79.0 x 91.5 1794		1489 / 1479	15 Alum	195/60			(F) 254 Vented Disc (R) 192 Drum	2530	
Toyota Celica GTS (00-05)	82.0 x 85.0 1796	2598	1488 / 1478	16 x 6.5 Alloy	205/50	3.17, 2.05, 1.48, 1.17, 0.92, 0.73	4.53	(F) 272 Disc (R) 267 Disc	*3010*	ABS brake option allowed. *Canton Accusump #24-026*, sandwich #24-700, valve #24-260, and related hoses and brackets. are permitted.
Toyota Corolla XRS (2005)	82.0 x 85.0 1796	2601	1480.8 1460.5	16 x 6 (F&R)	195/55 or 225/50 (max) (F&R)	3.17, 2.05, 1.48, 1.17, 0.92, 0.73	4.53	(F) 275.1 Vented Disc (R) 269.24 Vented DIsc	2750	This max. tire size supersedes SSCS section 9.1.7.E.7. Canton Accusump #24-026, install sandwich #24-700, valve #24-260, and related hoses and bracket allowed.
Toyota Matrix Base and XR (03-08)	79.0 x 91.5 1794	2601	1519 / 1497	16 Steel	205/55	3.17, 1.90, 1.31, 0.88, 0.72	3.9	(F) 331 Vented Disc (R) 229 Drum	2830	

SSC	Bore x Stroke(mm)/ Displ. (cc)	Wheel-base (mm)	Track F & R (mm)	Wheel Size(in.)/ Mat'l.	Tire Size (stock)	Gear Ratios	Final Drive	Brakes (mm)	Weight (lbs)	Notes:
Volkswagen Beetle (98-05)	82.5 x 92.8 1984	2513	1516 / 1494	16 x 6.5	205/55	3.78, 2.12, 1.36, 1.03, 0.84	4.24	(F) 280 Vented Disc (R) 232 Solid Disc	2975	Detachable hardtop shall be installed (latches shall be replaced with positive fasteners) convertible top shall be removed.
Volkswagen Jetta TDI (2009)	81.0 x 95.0 1968	2578.1	1540 / 1519	16 x 6.5 17 x 7	205/55 or 225/45	3.78, 2.12, 1.36, .96, .77, .76 or 4.04, 2.37, 1.56, 1.16, .85		(F) 288 x 25 Vented Disc (R) 260 x 12 Solid Disc	3200	28mm Turbo Inlet restrictor required. Must use diesel fuel in accordance with 9.3.26.A.
Volskwagen Rabbit 2.5 (06-07)	82.55 x 92.71 2481	2578.1	1540 / 1519	15 x 6 16 x 6.5 17 x 7 Alum	195/65 or 225/45/15 or 195/40 (max)	3.78, 2.12, 1.36, 1.03, 0.77	3.65	(F) 228 Vented Disc (R) 260 Solid Disc	2975	This max. tire size supersedes SSCS section 9.1.7.E.7.
Volskwagen Rabbit 2.5 (08-09)	82.55 x 92.71 2481	2578.1	1540 / 1519	15 x 6 16 x 6.5 17 x 7 Alum	195/65 or 195/40 (max)	3.78, 2.12, 1.36, 1.03, 0.77	3.65	(F) 228 Vented Disc (R) 260 Solid Disc	3200	This max. tire size supersedes SSCS section 9.1.7.E.7.

Notes:

www.racelabz.com

A LIPPERINI COMPANY

Racing · Prep · Fabrication · Sales

SPEC MIATA RACECARS & PARTS

For years **RaceLabz** has been building Spec Miatas and fabricating rollcages. Now we are making these services available directly to racers. From complete turn-key racecars and custom rollcage installations to Spec Miata roll cage kits and trackside support, **RaceLabz** is your source for championship winning performance.

$10,999

➤ Custom Rollcage Installation
- *Complete custom installation for $2,250*
- *Custom seat location & fitted door bars*

➤ Spec Miata Racecars
- *Turnkey racecars starting at $10,999*
- *New build, New safety equipment*

➤ Track Support & Rentals
- *Track suspension setup & support*
- *Arrive & Drive racecar rentals*

➤ Driver Coaching
- *Championship winning driver coaching*
- *Test Day ride along, Data, Analysis*

➤ Spec Miata Rollcage Kits
- *Complete ready to weld kit for $1,250*
- *Completely fitted, welded in jig & marked*

$1,250

	RaceLabz Rollcage Kit	Competitor A	Competitor B
Fully Bent Tubing Kit	✓	✓	✓
Ready to Weld	✓		
All Tubing Notched	✓		
Floor Plates Included	✓	✓	
All Tubing Cut to Length	✓		
All Tubing Included	✓		
All Tubing Fitted in Jig	✓		
Pre-Welded & Marked	✓		

➤ Used & New Miata Parts
- *Warehouse of Used & New Miata Parts*
- *New performance Miata parts*
  - > High Hp Air Filters
  - > Custom Front Splitters
- Miata Brake Pads & Rotors

Racing Brake Pad Special!

Hawk BLUE or DTC 60 pads + 2 Champion Brake Rotors (The same type rotors that won the 2009 SCCA Runoffs)

$159 Front or Rear sets You Choose!

For most 90-05 Miatas call or email for details

Contact us today at: 570-655-7272 · info@RaceLabz.com

Located in Pennsylvania, all prices listed are subject to change based on market fluctuations, steel & vehicle prices, other options available, all prices starting at, call for details

9.1.8. SPEC MIATA CLASS

These specifications are part of the SCCA GCR and all automobiles shall conform to GCR Section 9.

A. PURPOSE AND INTENT

The Spec Miata (SM) class is intended to provide the membership with the opportunity to compete in low cost, production-based cars with limited modifications, suitable for racing competition.

The rules are intentionally designed to be more open than the Showroom Stock class but more restricted than the Improved Touring class.

The vehicle identification number (VIN) shall correspond with the model-year automobile classified. VIN plates or stampings shall remain in place. There must be a minimum of two (2) VIN plates or stampings that correspond with the model year automobile classified.

B. CLASSIFIED CARS AND WEIGHTS

Classified cars and weights are listed on the Spec Miata Specification Table.

Cars are to be weighed with the driver and required ballast. See GCR Section 9.3 Ballast.

C. AUTHORIZED MODIFICATIONS

The following items represent the only modifications and safety items permitted and/or required on Spec Miata automobiles other than safety items as required in Section 9. Permitted components or modifications must not perform a prohibited function. Updating or backdating is not allowed for any car, model, specification, or component, except as specifically authorized in these rules.

A Mazda factory shop manual for the specific make, model, and year of automobile is required to be in the possession of each entrant. The manual may be in the form of printed material, microfiche, CDs, DVDs, and/or Internet access to manufacturer sponsored web-based databases. The manual is intended to aid scrutineers in identifying parts and the configuration of the automobile.

All engines and internal components used in rebuilding or refurbishment must have been offered for sale by Mazda in the US for the correct year and VIN of car, except as otherwise provided for in these rules. This rule prevents use of aftermarket parts or Mazda parts of incorrect specification or application.

Assembly, rebuild, and refurbishment procedures, and all associated dimensions must adhere to the published factory service procedures, except as otherwise stated in these rules. No components may be added or omitted from those specified by the published factory service procedures. All components must be standard dimensions.

Any water pump, timing belt, or alternator of original equipment manufacturer design, dimensions, and specification may be used.

The use of any painting, coating, plating, or impregnating substance (e.g., anti-friction, thermal barrier, oil shedding coatings, chrome, anodizing, etc.) to any internal engine surface, internal transmission or differential surface, internal or external surfaces of the exhaust manifold or down tube is prohibited.

If the factory manual or these rules provide only a partial specification or no specification at all, the Mazda parts may not be modified beyond what

is allowed in these rules. Compliance of such parts will be determined by comparison to new parts delivered by Mazda. Other approved parts with only a partial specification or no specification available in these rules may not be modified. Compliance of such parts will be determined by comparison to new parts from the supplier.

1. Engine Modifications

a. General

1. No modifications to this engine are allowed, except where specifically authorized within these rules. This includes, but is not limited to, all fuel injection and engine management components, as well as electrical, cooling, and lubrication systems. All systems are subject to test procedures and must conform to OEM specifications as stated in the Mazda factory service manual.

2. Permitted engine maintenance includes the replacement, but not modification, of external engine and engine systems parts. No balancing, blue printing, lightening, polishing, or other modification of moving parts of the engine is permitted. All parts in the engine must be stock Mazda OEM parts unless specified in this rule set. For all Mazda part numbers in these specifications, superseding part numbers are considered equivalent.

b. Block

1. The engine block may be decked/milled to achieve the factory specified compression ratio for the correct model year as listed. Honing of cylinders is permitted to a maximum diameter as shown in the following table:

Model Year	Maximum Diameter (inches)
90-93	3.076
94-05	3.273

2. Cast iron cylinder liners (sleeves) may be installed to restore damaged or worn cylinder bores to the original dimension. Re-boring to over size is prohibited.

c. Crankshaft

1. The stock Mazda Miata crankshaft must be used with no modifications allowed, as shown in the following table, which also displays minimum weights (not including pilot bearing or hardware):

Model Year	Part Number	Minimum Weight (lbs)
90-93 (short nose)	B617-11-300	26.5
90-93 (long nose)	B6S7-11-300A	26.5
94-05	BP06-11-300D	35.6

2. Main and rod bearings must not be modified in any way. OEM bearings must be used from within the standard ranges as allowed in the Mazda factory service manual. The crank triggers must not be altered or modified in any way. The crank pulley/balancer must not be altered or modified in any way.

d. Connecting Rods

1. Mazda part number B6S7-11-210E must be used. Minimum connecting rod weight with cap and bolts is 537 grams.

e. Pistons

1. Mazda OEM standard size pistons must be used. Minimum weights less wrist pin and hardware and minimum weights of wrist pins are shown in the following table:

Model Year	Part Number	Minimum Weight (w/o wrist pin and hardware (grams)	Minimum Weight Wrist Pin (grams)
90-93	B6Z2-11-SA0C	271.5	86.0
94-97	BPY11-11-SA0A	291.5	80.0
99-00	BPZ0-11-SA0	*288.0*	*78.0*
01-05	BPZ3-11-SA0	*288.0*	*78.0*

2. The use of oversize pistons is not permitted. No modification of the piston is permitted. Modification of the piston ring end gap width is allowed.

f. Cylinder Head

1. The gasket face of the cylinder head may be resurfaced provided the maximum compression ratio is not exceeded and the minimum height of the cylinder heads are maintained. The minimum heights of the cylinder heads as measured in the factory service manual allowed are shown in the following table:

Model Year	Minimum Height (inches)
90-93 (1.6L)	5.245
94-05 (1.8L)	5.245

2. The cylinder head must not be ported, polished, or machined. The original casting must not be modified in any way or polished unless specified below.
3. The throat area of the port consists of the 90 degree angle at the very bottom of the cast steel valve seat as it transitions to the aluminum casting below. It is permitted to plunge cut the throats in order to correct for core shift

that is commonly found in many cylinder heads. This cut cannot extend further than the specified number below from the bottom of the ferrous valve seat. There can be no tooling or machine marks in the head below this point. The area under the seat where the plunge cut ends and the casting resumes cannot be blended by hand, machined, or chemically processed to create a smooth transition. The 90 degree bend at the bottom of the valve seat and the aluminum directly below it will be measured with a gauge and must conform to the maximum diameters and depths listed below.

4. No aluminum in the bowl area (other than that specified for the plunge cut) or the ports may be removed, added, or manipulated for any reason. It is understood that heads may look slightly different from bowl to bowl due to casting irregularities. No material may be removed or added from the short turn radius in the port.

Engine	Maximum Intake Throat Diameter (inches)	Maximum Exhaust Throat Diameter (inches)	Maximum Throat Depth (from bottom of ferrous valve seat (millimeters)
1.6L	1.095	0.948	12
1.8L	1.178	1.020	9

5. Unshrouding of valves is explicitly limited as follows: there must be a sharp edge where the valve relief cut meets the chamber. That edge must be present and unmodified. This area is not to be blended by hand, machined, or chemically processed to create a smooth transition. The maximum dimensions are listed below, measuring guide centerline to chamber edge:

Engine	**Maximum Intake Valve Relief Cut radius (inches)**	**Maximum Exhaust Valve Relief Cut radius (inches)**
1.6L	0.687 Radial	0.600 Radial
1.8L	0.760 Radial	0.675 Radial

g. Camshaft

1. Camshafts must comply with the official camshaft specifications as supplied by the SCCA Club Racing Tech Department. The camshaft and crankshaft sprockets must be as supplied by Mazda. Cam timing must not be altered; the belt must be installed as specified in the Mazda factory service manual.

h. Valves

1. OEM valves must be as supplied by Mazda. Valve location or angle must not be moved. Reshaping of the valves is strictly prohibited. Valve guides may be replaced provided the position of the valve is not changed and the replacement guides are Mazda OEM parts. Valve stem installed height must be per the Mazda factory service manual: Valve stem seals must be Mazda OEM parts. Valve seats may be cut provided the valve seat angles are stock Mazda three angle cut, as defined below.

2. A valve job will consist of only three flat angles; radius cuts are not allowed. A 45 degree seat angle must be used, which may vary in width from .030 inch to .050 inch. To narrow or correctly position the face angle, a bottom angle of 70 degrees must be used. To narrow or correctly position the face angle, a top cut of 30 degrees may be used. All angles must stay on the cast steel block portion of the seat. The angles must not extend off the seat into the aluminum casting at the top or bottom of the seat.

i. Valve Springs

1. Valve springs are Mazda OEM as specified in the Mazda factory service manual. Valve spring shims are not permitted except the one standard shim that is used under every valve spring. Only the Mazda shim may be used and the OEM dimensions must be maintained.

j. Compression Ratio

1. Maximum allowed compression ratios are shown in the following table:

Model Years	Compression Ratio (without carbon)
90-93	9.4:1
94-97	9.0:1
99-00	9.5:1
01-05	10.0:1

k. Intake Manifold

1. The intake manifold must be stock Mazda parts, without any material added or removed. No coating is permitted on the exterior or interior of the manifold. Injectors must be stock Mazda OEM parts, correct for the model year of the car. All air entering the intake tract shall pass through the fuel injection air inlet.

   a. 1.6L cars may replace the stock air box with a cone style air filter assembly. The air filter element is unrestricted. No ducting or baffling of air to the air filter is permitted.

   b. 1.6L cars may open and adjust, but not modify, the

OEM airflow meter. For 1.6L cars, the position of the air flow meter may be moved provided it remains attached to the unmodified factory intake tube.

c. 1.8L cars must use the stock air box, but the air filter element is unrestricted. Mass air flow sensors may not be modified, adjusted or opened.

d. 1.8L cars must use an air restrictor plate. The restrictor plate must be placed between the throttle body and plenum. All intake air must pass through the restrictor plate. Restrictor plates must be the proper size as listed in the specification table, must be from Mazdaspeed Motorsports Development or from SCCA Enterprises, and must not be modified.

l. Fuel system

1. The fuel pump and fuel pressure regulator must be Mazda OEM parts and unaltered*, but the regulator may be adjusted freely. Any adjustable mechanical fuel regulator may be used, but it may not be adjusted from the cockpit.* Unleaded fuel filler trap door and restrictor plate in filler neck may be removed. Refer to GCR Section 9.3.26 for permitted fuel specifications and for the required fuel sample acquisition port.

m. Exhaust system

1. The exhaust manifold must be Mazda OEM, without any material added or removed. No coatings are permitted on the exterior or interior of the manifold. Heat wraps may not be used.

2. The 1999-05 Miatas with California emissions equipment may substitute the Federal OEM exhaust manifold and ECU for the OEM CA exhaust manifold and catalytic converter.

3. The post catalytic converter oxygen sensor may be disabled, replaced, relocated, or removed; the resulting hole (if present) may be plugged. Original exhaust system heat shields may be removed.

4. The factory exhaust system beyond the OEM front down pipe may be replaced, provided the following are true:

   a. The replacement system retains the original configuration (i.e., single tube design) and the tubing is a maximum of 2.25 inches outside diameter.

   b. The pipe may end anywhere after the rear subframe. Forward of the rear subframe, the pipe must follow the original path of the OEM exhaust system.

   c. No expansion chambers. A single muffler may be added.

   d. The system meets all event specific sound requirements.

   e. A catalytic converter may be gutted, removed, or replaced with a catalytic converter replacement pipe. The replacement pipe must not exceed 17.5 inches in length and have an outside diameter no greater than 2.375 inches.

   f. No portion of the exhaust may be wrapped with any type of insulating tape, nor shall any portion of the exhaust, internal or external, be coated with any thermal coatings.

n. Lubrication System

1. The oil pan must be as supplied by Mazda. No modifications are permitted. The windage tray must be used and must not be modified in any way.

o. Cooling System

1. The water pump must be a Mazda or an OEM equivalent part. The water pump pulley must be the stock Mazda part. No modifications are permitted.
2. Any radiator may be used, provided it is mounted in the original location, maintains the same plane as the original core, and requires no body or structure modifications to install. Any openings created by fitting an alternate radiator must be blocked to prevent air from entering the engine compartment. At least one functional stock OEM cooling fan must be maintained and mounted in the stock location.
3. Thermostats may be modified, removed, or replaced.
4. All cars may install the upper radiator seal, p/n NA75-50-OK7A.
5. A radiator screen of 1/4 inch minimum mesh may be added in front of the radiator and contained within the bodywork.

p. Electrical Equipment

1. The ECU and engine electrical harness must be as supplied by Mazda. No modifications are permitted. The ECU maps and inputs must not be modified. *Chips may not be replaced. The OBDII diagnostic port must be operational in all 1996-2005 cars.*
2. Ignition coils must be stock Mazda parts. No modifications are permitted.
3. All sensors related to engine operating parameters must be used and must be stock Mazda parts. These sensors and their locations and mounts, and their wiring harness leads may not be altered *except as allowed in subsection 6 below*. Any sensors required for analog type gauges must be in addition to the Mazda sensors. Data acquisition sensors may be added. Relocating the oil pressure sending in order to install an oil pressure gauge is permitted.
4. The alternator may be OEM equivalent. The alternator drive pulley must be stock. The alternator must not be disabled in any way. Spark plugs and spark plug wires may be substituted. Ignition timing is unrestricted within stock adjustment capability.
5. Batteries may be replaced with those of an alternate manufacturer, provided they are of similar amp-hour capacity, size, and weight, and are fitted in the standard location. Additional battery hold-down devices may be used and are strongly recommended.
6. *For 1999-2005 model years only, it is permitted to alter the ignition timing by elongating the mounting holes of the crankshaft position sensor trigger wheel.*
7. *It is permitted to remove all components of the cruise*

control system.

8. It is permitted to remove the horn.

q. Flywheel

1. The stock Mazda flywheel must be used. No modifications are permitted except for normal resurfacing for clutch wear. The following table provides minimum weights with pilot bearing:

Model Years	Minimum Weight (lbs)
90-93	17.6
94-05	17.0

2. The 94 model year may use the flywheel from the 95-05 model years. If the 1994 flywheel is used, it must weigh a minimum of 18.5 lbs.

r. Clutch

1. All cars must use either the stock OEM pressure plate or the ACT pressure plate (Mazdaspeed p/n: 0000-0205401-SS – 1.6L cars or 0000-0205404-AC – 1.8L cars). The unmodified pressure plate must be bolted directly to the stock, unmodified flywheel. Any clutch disk may be used. Alternate clutch lines are permitted, must serve no other purpose.

s. Miscellaneous

1. The use of the following non-standard replacement parts is permitted provided the use does not result in any unauthorized modification of any other component.

   a. Fasteners – nuts, bolts, screws, washers, studs, etc. (Head bolts, rod bolts, flywheel bolts, and crank pulley bolt must be used as provided by Mazda.)

   b. Gaskets and seals, except those specified in the above rules

   c. Mechanical tachometer and analog gauges

   d. Oil and lubricants

2. Cooling System

a. The water pump must be a Mazda or an OEM equivalent part. The water pump pulley must be the stock Mazda part. No modifications are permitted.

b. Any radiator may be used, provided it is mounted in the original location, maintains the same plane as the original core and requires no body or structure modifications to install. Any openings created by fittng an alternate radiator shall be blocked to prevent air from entering the engine compartment. The stock cooling fan(s) must be maintained. At least one functional stock OEM cooling fan must be mounted in one of the stock locations.

c. Thermostats may be modified, removed, or replaced.

d. All cars may install the Upper Radiator Seal, p/n NA75-50-OK7A

e. A radiator screen of one-fourth (1/4) inch minimum mesh may be added in front of the radiator and contained within the bodywork.

f. The factory air conditioning systems may be removed. Items that serve a dual purpose, such as the alternator/air conditioning compressor bracket, may not be substituted.

g. Engine coolant fluid, coolant/heater hoses and clamps may be substituted. Heater core may be bypassed. It may not be modified or removed. Heater water control valve(s) may be added or substituted.

3. Transmission/Final Drive

a. Transmission and final drive ratios must remain stock for the year of car. *Any 1990-2005 Miata transmission and required items for conversion may be used.* 1999-up cars shall only use the 5 speed transmission and the 4.3 differential ratio. All cars may use the stock unmodified OEM open differential or one of the approved alternates listed below.

b. 1990 to 1993 Miatas may use the stock, unmodified viscous limited slip differential or the MAZDASPEED Motorsports Development limited slip differential, part number #QN10-64-A00 (previously TOY1-27-200 & 0000-02- 5501).

c. 1994 and newer cars may use the stock limited slip (Torsen) differentials from 94-05 models. Stock gear ratios must be retained.

d. The 90-93 Miatas may convert to the 94-05 differential assembly and must retain the 4.3 differential gear ratio from the 99-05 model years. This conversion includes the driveshaft and half-shafts. The original 90-93 model rear suspension uprights must be retained.

e. Lubricants may be substituted with any lubricant.

4. Chassis

Suspension modifications are limited to the addition of the MAZDASPEED Motorsports Development "Spec Miata kit" and those modifications detailed in this area.

a. MAZDASPEED Motorsports Development Spec Miata kit

1990-93	1.6 DOHC	K-SPEC-M5-SUSP
1994-97	1.8 DOHC	K-SPEC-M5-SUS8
1999-up	1.8 DOHC	K-SPEC-M5-SUS9

The following is a breakdown of components supplied within these kits. All parts numbers are MAZDASPEED Motorsports Development parts numbers. No substitution of parts is allowed. The kits must be used in their entirety*, except as specified.*

1. Shocks
   Front MAZDASPEED part #: 0000-04-5225-BL
   Bilstein part # stamped on front shock: B46-1488
   Rear MAZDASPEED part #: 0000-04-5226-BL
   Bilstein part # stamped on rear shock: B46-1489

2. Springs
   Front Eibach ERS 700 lbs/6" 0000-04-9700-06

Rear Eibach ERS 325 lbs/7" 0000-04-9325-07

3. Coil-Over kit
   Front/Rear 0000-04-5402AW*: The sleeves and perches may be replaced with parts of the same material and dimensions.*

4. Anti-Roll Bars
   K-SPEC-M5-SUSP
   Eibach kit - front / rear bars 0000-04-5302-EB
   Front 24mm Adjustable
   Rear 15mm Adjustable
   K-SPEC-M5-SUS8 *or may use adjustable 24 mm front bar from Eibach kit 0000-04-5302-EB.*
   Eibach kit - front / rear bars 0000-04-5303-EB
   Front 27mm non-Adjustable
   Rear 15mm Adjustable
   K-SPEC-M5-SUS9
   Eibach kit – front / rear bars 000-04-5304-EB
   Front 27mm non-Adjustable
   Rear 15mm Adjustable

b. All cars may use the Fat Cat Motorsports bump stop kit (p/n FCM-MT-KIT-SM) or the unmodified Mazdaspeed bump stop (p/n 0000-04-5993AW) in conjunction with the 1999-up stock upper mount assembly consisting of the upper mount (p/n: NC10-28-340C), the upper mount bushing (p/n: NC10-28-776) and the upper mount washer (p/n: NC10-28-774), and shock body spacer over the shock shaft (p/n 1234-56-789-AW). All other OEM upper mounting hardware shall be discarded. Non-OEM equivalents may be used in place of the upper mount, upper mount bushing, and upper mount washer only. No other modifications are allowed.

A metal or delrin plastic spacer as shown below may be added between the Mazdaspeed bump stop and the 1999 shock hat. The 0.31 inch measurement is +/- 0.01 in. All other measurements are non-critical and are shown for clarification purposes only.
In addition, a 3/8 inch steel hardware washer may be installed between the shock shaft and the bump stop. The washer shall be a maximum of 1/8 inch thick.

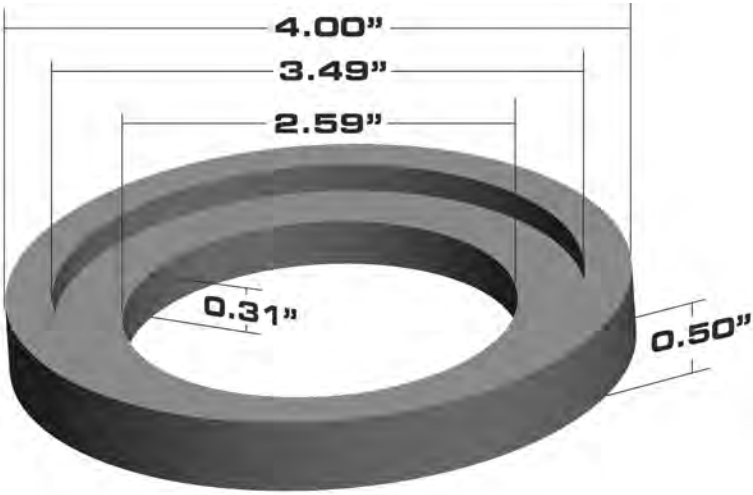

+/- 0.05" TOLERANCE

c. Subframe braces may be updated to stock 1997 configuration utilizing the MAZDASPEED Motorsports Development Spec Miata kit.

d. Anti-roll bar links may be replaced and may be adjustable, but the attachment points must remain stock. The control arms and specified anti-roll bar may not be modified. One end of the sway bar(s) may be disconnected as a suspension tuning aid. The bar must remain in place and be solidly attached to the suspension on one end. *A locating ring for the rear anti-roll bar may be added; it must serve no other purpose.*

e. Suspension alignments (camber, caster, toe) are unrestricted within the limits of the unmodified factory adjustments. Minimum ride height is unrestricted.

f. No relocation or reinforcement of any suspension component or mounting points is permitted.

g. Hardware items (nuts & bolts) may be replaced by similar items performing the same fastening function(s).

h. Manual or power steering racks may be used. Power steering racks may be converted to manual by removing all power steering components.

i. Towing eyes per GCR Section 9.3 Towing Eyes are required. Stock towing eyes may be modified, replaced, or removed but may serve no other purpose.

j. Hubcaps and wheel trim shall be removed.

k. All chassis/structural/electrical repairs, if performed, shall be in concurrence with factory procedures, specifications, and dimensions. Unless specifically authorized by the manufacturer for repair or allowed by these rules, no reinforcement, i.e., seam welding, material addition, etc., is permitted.

l. The front shock tower connector/brace is not permitted on the

1999 and newer cars.

m. The Mazdaspeed motor mount, part NAY1-39-040 is allowed.

n. All cars 1990-1997 are permitted to use the "R" model tie rod ends part # N021-32-280A

5. Brakes

a. Backing plates and dirt shields may be ventilated or removed.

b. Brake lines may be replaced with steel lines or Teflon lined metal braided hose.

c. Cars with antilock braking systems must have the system disabled as specified in GCR 9.3 Brakes.

d. Parking brake mechanisms, and actuating components may be removed.

e. Brake pads and brake fluid are unrestricted

f. 2001 and newer cars must use the 255mm(F) and 252mm(R) brakes. The larger brakes 269.5mm(F) and 267.9mm(R) are not permitted.

6. Wheels/Tires

Any wheel/tire may be used within the following limitations:

a. Required rim diameter is fifteen (15) inches. Maximum rim width is seven (7) inches. Minimum weight of wheel shall be 13 lbs without spacers. All four wheels must be the same dimension including offset.

b. All wheels must be one-piece metal castings (not multi-piece wheels, bolted, riveted or welded together).

c. Tires:

1. National Competition
All cars shall use the Toyo Proxes RA1 (205/50R15). In addition, the Toyo R888 will be allowed through the second national race weekend in each division. Starting with the third national race weekend in each division, all cars shall use the Toyo Proxes RA1 only. The only modifications allowed to tires are having treads "shaved" or "trued."

2. Regional Competition
Tires must conform to 9.3.45. Individual regions may require spec tires for regional races. Supplemental regulations for specific events should be checked.

d. The front track shall not exceed 1450 mm. *The rear track shall not exceed 1475 mm.* Aftermarket wheel studs, lug nuts, and wheel spacers are permitted. If spacers are used they shall be no greater than 13mm and equal per axle.

e. Tire tread (that portion of the tire that contacts the ground under static conditions) shall not protrude beyond the fender opening when viewed from the top perpendicular to the ground. To determine compliance, the vehicle should be rolled through a powdered substance, as raced with driver, in order to indicate the tire tread contact patch under static conditions.

7. Body/Structure

a. Fenders and wheel openings shall remain unmodified. It is permitted to roll under or flatten any interior lip on the wheel

opening for tire clearance. Non metallic inner fender liners may be removed.

b. Body repair shall be performed using every reasonable effort to maintain stock body contours, lips, etc. Any body repair modification having as its purpose increased clearance is prohibited.

c. The "R" package Miata chin spoiler is allowed on 1990-1997 cars provided it is mounted in the OEM location. 1999-up cars may use the OEM chin spoiler for these cars (99-00 p/n: NC10-V4-900F or 01-05 p/n: NO67-V4-900G).

Rear spoilers and rocker panel moldings including OEM design are prohibited.

d. Windshield Clips/Rear Window Straps per GCR Section 9.3 Windshield Clips/Rear Window Straps, are permitted and recommended.

e. Convertible tops and attaching hardware shall be completely removed. Cars may compete with the Mazda factory detachable hard top in place (latches shall be replaced with positive fasteners), but it is not mandatory. When no top is used, driver shall wear arm restraints, and the cage will meet the helmet clearance rule. *It is allowed to attach the hard top to the upper windshield bar of the roll cage.*

f. Body side moldings and wheel opening trim pieces may be removed.

g. The plastic trim on the hood may be removed.

h. Hood and trunk clips are permitted. Stock hood and trunk latches may be disabled or removed.

i. Ducting may be added to provide fresh air to the driver compartment. This ducting shall be located in the driver and/or passenger vent window area by means of a transparent/alternate vent window material and duct with no modifications to the bodywork.

To improve driver exit through the window area, the driver vent window and vent window supporting frame may be removed as a pair. If removed, ducting may be in the passenger side vent window only.

j. Radio antennas may be removed. Antennas for two-way radios may be added.

8. Driver/Passenger Compartment - Trunk

a. The driver's seat shall be replaced with a one-piece bucket-type race seat. All seat mountings shall be reinforced. Factory seat tracks/brackets may be modified, reinforced, and/or removed to facilitate replacement mountings provided they perform no other function. The passenger seat must be removed. The transmission tunnel may be modified for the purpose of installing a competition driver seat. The floor pan must remain in its original position.

b. Any steering wheel, except wood rimmed types, and its required mounting modifications may be used. Any shift knob may be used.

c. Gauges and instruments may be added, replaced, or removed. They may be installed in the original instrument(s) location

using a mounting plate(s), or any other location using a secure method of attachment. Other than modifications made to mount instruments and provide for roll cage installation, the remainder of the dash "board" or panel shall remain intact.

d. OEM exterior mirrors shall be retained. Mirror mounting position may be changed, but must remain within 6" of the original location on the exterior of the door. The OEM interior mirrors may be removed, relocated or replaced by a mirror of any design. Additional mirrors may be added, both interior and exterior.

e. Carpets, center consoles, cargo bins, seat belts, floor mat, firewall insulation/blanket, radio system, headliners, dome lights, grab handles, sun visors and their insulating and attaching materials may be removed. Other than to provide for the installation of required safety equipment or other authorized modifications, no other driver/passenger compartment alterations or gutting are permitted.

f. Two way radios may be used.

g. Spare wheels and tires, jacks and tools shall be removed from the cargo/trunk area. Spare tire covers and trunk mats and/or trunk carpeting shall be removed. The trunk trim plate that is used to mount the factory jack handle may be removed.

h. Modifications may be made to the foot pedals to improve the comfort and accessibility to the driver. Dead pedal/foot rest and heel stop may be added.

i. If ballast is required to meet the required weight it shall be added as follows:

   1. All ballast shall be securely mounted on the passenger floor.

   2. Each segment of ballast shall be fastened with a minimum of two (2) one-half (1/2) inch bolts and positive lock nuts of SAE Grade 5 or better and shall utilize large diameter, load distributing washers.

   3. Holes may be drilled in the passenger floorpan for the purposes of mounting the ballast and the floorpan may be reinforced for that purpose only.

j. All cars shall run with both front door windows fully open (down).

9. Safety

a. An electrical master ("kill") switch is required. See GCR Section 9.3 Master Switch.

b. Installation of a fire extinguisher or fire system is required. See GCR 9.3 Fire System.

c. Air bag systems shall be disarmed and may be removed.

d. In any automobile where allowed removal of upholstery, seat belts, etc., creates an opening between the driver/passenger compartment and an exposed gas tank, or part thereof, including the filler tube, a metal bulkhead which completely fills such opening shall be installed. See GCR 9.3.27

Notes:

SM	Bore x Stroke(mm) / Displ. (cc)	Valves IN & EX (mm)	Restrictor Size (mm)	Comp. Ratio	Wheelbase (mm)	Gear Ratios	Final Drive	Brakes (mm)	Weight (lbs)	Notes
Mazda MX-5 / Miata (90-93)	78.0 x 83.6 1597	31.1 (I) 26.3 (E)	N/A	9.4	2266	3.14, 1.89, 1.33, 1.00, 0.81	4.3	(F) 235 Vented Disc (R) 232 Solid Disc	*2275*	
Mazda MX-5 / Miata (94-97)	83.0 x 85.0 1839	33.1 (I) 28.2 (E)	*47mm*	9.0	2266	3.14, 1.89, 1.33, 1.00, 0.81	4.3 See Notes	(F) 255 Vented Disc (R) 252 Solid Disc	*2365*	Must update to the 4.30:1 rear axle ratio as found in the 99+ cars.
Mazda MX-5 / Miata (99-00)	83.0 x 85.0 1839	33.1 (I) 28.2 (E)	41mm	9.5	2266	3.14, 1.89, 1.33, 1.00, 0.81	4.3	(F) 255 Vented Disc (R) 252 Solid Disc	2450	Maximum L dimension of 1.815" is permitted.
Mazda MX-5 / Miata (01-05)	83.0 x 85.0 1839	33.1 (I) 28.2 (E)	43mm	10.0	2266	3.14, 1.89, 1.33, 1.00, 0.81	4.3	(F) 255 Vented Disc (R) 252 Solid Disc	2450	

Notes:

9.1.9. SPORTS RACING CATEGORY

These specifications are part of the SCCA GCR and all automobiles shall conform with GCR Section 9.

A. SCCA SPORTS RACING CATEGORY PREPARATION RULES

The SCCA Sports Racing Category shall be for automobiles which are designed and constructed for road racing competition, offering provisions for driver and a passenger, or driver alone (single-seater). They shall conform to the following requirements.

New chassis of non-metallic composite construction shall be proven to meet FIA specifications for non-metallic composite chassis prior to being submitted to the SCCA for homologation. Contact the SCCA national office for a list of the relevant FIA specifications/SCCA requirements.

Effective 1/1/97, those cars formerly known as Sports Renault and/or Spec Racers or any variants of this chassis/drive train/bodywork combination will not be allowed to compete in ASR in any SCCA sanctioned event.

Single-seat Formula car chassis (Ex.: FA, FC, FF, FV) fitted with enclosed bodies (as specified in these rules) may run in the Sports Racing Class (ASR, CSR, DSR) appropriate for their engine displacement and GCR Section 9. This means that all Formula Atlantic, Formula Continental, Formula F, and Formula Vees running in Sports Racing categories shall have bodywork which complies with Section A.1 or A.2, of the Sports Racing Specifications. The ex-Formula car chassis need not have any former engine(s) fitted. Converted cars will maintain their former SCCA registration vehicle numbers. Each converted car shall be Homologated and have a new Vehicle Logbook (with new pictures); however, the former Logbook will be securely attached to the new Logbook. This procedure will enable Race Officials and Scrutineers to identify a single-seat Sports Racer as formerly having been a bona fide Formula car. New Single seat Sports Racers may be of new construction. (Design plans/pictures shall be submitted to Club Racing Technical Services for homologation before competing.)

Where Weber or other approved carburetors are specified and used, they shall retain their standard configurations of fuel distribution. This is to prohibit annular discharge carburetors.

It is the intention of the Club Racing Board to never classify or replica or derivative of a mass produced road car body in the sports racing classes. These classes are intended for open and/or closed sports racer/sports prototype bodywork

Sports racing cars shall be classified according to engine displacement and divided into classes as follows:

- A Sports Racing (ASR) - Regional Status Only (Former Can-Am and F-5000 allowed if registered prior to 01/01/2003)
- C Sports Racing (CSR)
- D Sports Racing (DSR)
- Sports 2000 (S2)
- Spec Racer Ford (SRF)

A.1. ASR CLASSIFICATION - (REGIONAL ONLY CLASS)

a. Definition

A class for purpose built (i.e., road racing prototype, Can-Am, SR2,

etc.), highly modified single or two-seat, closed-wheel, open or closed cockpit racing cars which meet the general regulations of Section 9 of the GCR for Sports Racing Category cars, yet are unique in concept and liberal in specifications so as to provide innovative design latitude. Homologation is required on all ASR cars, except

1. Former Formula A (F-5000) cars registered as ASR cars before January 1, 2003.
2. Cars conforming to the 1978-1984 Can-Am specifications, with aerodynamic skirts removed, registered as ASR cars before January 1, 2003.
3. ASR cars registered prior to January 1, 2003 which meet the provisions of 9.1.9.A.1.n. These cars may be updated to Section A.1.b-m specifications but they then shall meet all requirements of Section A.1.b without exception, including homologation.

Exceptions:
Exceptions to the ASR specifications must be requested with the homologation application and will be listed on the homologation certificate.

b. Chassis/Frame

Chassis/frame construction is unrestricted within the following limitations:

1. Chassis of non-metallic composite construction shall be proven to meet FIA specifications for non-metallic composite chassis prior to being submitted to the SCCA for homologation. Single seat sports racers, up to 1300 lbs., shall meet the requirements listed in FIA article 258A or 275. All sports racers over 1300 lbs. shall meet the requirements of FIA article 258A only. There are no exceptions. Contact SCCA National Office for a list of the relevant FIA specifications/SCCA requirements.
2. Chassis of metallic tube and/or metallic monocoque construction shall be manufactured to be consistent with the safety requirements outlined within these rules and the GCR.

c. Engines

Any engine(s) may be used within the following limitations:

1. Piston or rotary internal combustion, gasoline-fueled engines only. No turbines. Turbo and/or supercharging is permitted.

d. Fuel System

Fuel system is unrestricted within the following limitations:

1. Fuel per GCR Section 9.3 Fuel.
2. Fuel Cell Vents: Fuel tank air vents shall be located at least 25cm (9.843 inches) to the rear of the cockpit.

e. Electrical System

Electrical system is unrestricted within the following limitations:

1. Self Starter: Cars shall be equipped with on-board self-starter and on-board power supply controlled by the driver while in a normal driving position.
2. Lights – Brake and Tail per GCR Section 9.3 Lights.

f. Transmission / Final Drive

Transmission / final drive system is unrestricted within the following

limitations:

1. Power shall not be applied to more than two (2) wheels.

g. Bodywork and Airfoils

Bodywork and airfoils are unrestricted within the following limitations:

1. Firewall and floor per GCR Section 9.3 Firewall and Floor.
2. Bodywork shall provide comfort and safety for driver and a passenger or for a driver only. All elements of the bodywork shall be completely and neatly designed and finished, with no temporary or makeshift elements.
   a. The bodywork as viewed from the side and above shall cover all mechanical components except that the intake, exhaust, and radiators may be exposed. The bodywork shall extend over the full width of the tires for at least one third (1/3) of their circumference as viewed from the side. Ventilation slots are permitted. The tires shall not be seen as viewed from above, although the rear tires may be exposed as viewed from the rear. Cycle-type fenders (which only cover the tire and are not continuous with the rest of the body) are prohibited. Fenders shall be firmly attached to the bodywork with no gap between body and fender.
   b. Width – The maximum width shall not exceed 221cm (87 inches) including all aerodynamic devices. However, no portion shall extend more than 10cm (3.9 inches) beyond a plane tangent to the outer face of the front and rear wheels with tires. The minimum body width between the front and rear wheels shall not extend inwards beyond a vertical plane connecting the centerlines of the front and rear tires.
   c. Visibility – Bodywork shall provide visibility for the driver forward and to both sides adequate for racing conditions.
   d. Windscreens are optional.
3. Cockpit Opening
   a. Closed-cockpit cars – Two functional doors, one on each side, are required and shall be capable of being opened from inside and outside of the car. Doors shall be hinged on the leading or top edges only. The driver's seat shall be capable of being entered from either side without the removal or manipulation of any part or panel (except for doors, removable steering wheel and removable cockpit padding).
   b. Open-cockpit cars – The driver's seat shall be capable of being entered without the removal or manipulation of any part or panel (except for a removable steering wheel and removable cockpit padding).

      The cockpit opening of metallic chassis shall have the following minimal dimensions:
      Length: 60cm (23.622 inches)
      Width: 45cm (17.717 inches)

      This width extends over a length of 30cm (11.811 inches) minimum. This minimal rectangular opening may exist anywhere forward of the bracing, and required padding

will not be considered in these dimensions.

The cockpit opening of non-metallic chassis shall be designed to meet the FIA homologation requirements (article 258A or 275 for cars up to 1300 lbs; Article 258A, only, for cars above 1300 lbs.).

4. Aerodynamic Devices
   a. The mounting apparatus of any part having an aerodynamic influence (i.e. bodywork, floor, sidepods, wings, spoilers, etc.), shall be rigidly secured to the entirely sprung part of the car (chassis/monocoque), shall have no degree of freedom in relation to the entirely sprung part of the car (chassis/monocoque), and shall remain immobile in relation to the chassis/monocoque at all times. This allows for actively adjusted aerodynamic elements (e.g., wings, diffusers, etc.).

   b. No Aerodynamic skirts per GCR Section 9.3 Aerodynamic Skirts. Within the preceding restrictions, only wearable material (fiberglass, Kevlar, carbon fiber, high density polyethylene, polypropylene, Teflon, Lexan, or wood) may be attached to the side panels as a rubbing strip. Ceramics, brittle plastics (e.g., Plexiglas), and other materials which shatter or break-up causing hazardous track conditions are prohibited.

   c. Ground effects are permitted, but may not be attained by "sealing" or bridging the gap between the bodywork and the road surface. Any means adopted to circumvent this intention shall automatically be regarded as a breach of these regulations.

   d. Leading Edges of Airfoils: The leading edge of any airfoil fixed to the front of the car shall not be sharp. Minimum radius: 0.5cm (0.2 inches).

5. Exposed glass headlight lenses and bulbs on the front of the car are prohibited.

h. Suspension

Suspension is unrestricted within the following limitations:

1. All cars shall be equipped with a full suspension system (e.g., springs, torsion bars, etc.) front and rear. Rigid mounted suspensions are prohibited. Monoshock/monospring systems are permitted.

i. Steering

Unrestricted provided that it is of a safe/secure design and acts upon at least two wheels at one end of the vehicle.

j. Wheels and Tires

Wheels and tires are unrestricted within the following limitations:

1. Tires shall have a minimum speed rating of 120 mph or better. Tires shall be the same size and design (e.g., radial, bias-ply, etc.) for the right and left sides of the front axle(s), and same size and design (e.g., radial, bias-ply, etc.) for the right and left sides of the rear axle(s).

2. Wheels – Minimum diameter 10", minimum width 6". Wheels shall be identical for the right and left sides of the front axle(s), and identical for the right and left sides of the rear axle(s).

Wheel material shall be metal. Cars shall be equipped with a minimum of four (4) wheels. Wire wheels are prohibited.

k. Brakes

Brakes are unrestricted within the following limitations:

1. Cars shall have a braking system that acts upon all wheels of the vehicle. Chain/belt driven cars may have a single brake caliper that acts upon the differential, thereby applying braking force to the two (2) drive wheels.
2. Cars shall be equipped with a dual braking system operated by a single control. In case of failure or leak at any point in the system, effective braking power shall be maintained on at least two wheels.

l. Weight (without driver)

1. The minimum weight of the vehicle as raced, without driver, shall be 750 lbs. Cars of composite (e.g., fiberglass, carbon fiber, Kevlar, etc.) chassis construction shall not exceed a maximum weight, as raced without driver, of 1500 lbs. Cars of conventional tubular space-frame or metallic monocoque chassis construction that are in excess of 1800 lbs, as raced without driver, require specific approval by the Club Racing Board and the Club Racing Technical Manager for homologation and competition eligibility.

m. Safety Equipment

Note: All ASR cars shall meet all applicable portions of GCR Section 9.

1. Mirrors per GCR Section 9.3 Mirrors. Additionally, there shall be at least two (2) mirrors, each with a minimum 100cm² (15.5 in²) of reflective surface.
2. Towing Eyes per GCR Section 9.3 Towing Eyes. Additionally, if the rollbar is faired-in, the fairing shall have rollbar access hole(s) to allow for quick retrieval.
3. Side Intrusion Protection
   For metallic chassis, the area between the upper and lower main frame tubes from the front roll hoop bulkhead to the rear roll hoop bulkhead shall be protected by one of the following methods to prevent the intrusion of objects into the cockpit.
   a. Panel(s), minimum of either .060” heat-treated aluminum (6061-T6 or equivalent) or eighteen (18) gauge steel, attached outside of the main frame tubes.
   b. Reinforced body – at minimum, consisting of a double layer, five (5) oz., bi-directional, laminated Kevlar material incorporated into the body which shall be securely fastened to the frame.
   c. For either method, the material used for the chassis braces in this area shall be at least equivalent to the roll hoop brace material.

      Non-metallic chassis are covered under the FIA chassis homologation.
4. Crushable Structure
   For metallic chassis, there shall be a crushable structure, securely attached to the front bulkhead, with a minimum cross section of 200 cm² (31 in²), 40cm (15.75”) forward

of the clutch and brake pedals (not depressed) constructed of a minimum of eighteen (18) gauge 6061-T4 or equivalent aluminum.

a. Radiators may be incorporated in this structure.

Non-metallic chassis are covered under the FIA chassis homologation.

5. Driver's Feet Position
For metallic chassis, the frame shall incorporate forward-facing braces to protect the driver's legs and feet. The braces shall extend from the front roll hoop to the front bulkhead. (The front bulkhead is defined as the furthest forward transverse section of the main frame.) The soles of the driver's feet shall not extend beyond the front edge of the wheel rims (in normal position; i.e., pedals not depressed) and shall remain behind the front bulkhead. The lower main frame rails shall be a minimum of twenty-five (25) centimeters (9.84") apart (inside dimension) from the front bulkhead to the rear roll hoop.

Non-metallic chassis are covered under the FIA chassis homologation.

n. ASR Cars Registered Prior to January 1, 2003

Turbocharging/supercharging is prohibited. Cars shall be classified according to engine displacement as follows:

Engine Type	Displ. (cc)	Induction	Weight (lbs)
Rotary Piston	2292 max.	Unrestricted	1326
Racing	1300-2000	Unrestricted	1200
Racing	2001-3000	Unrestricted	1250
Stock block & cyl. head	3001-4000	Fuel injection or one Holley 4150 1-11/16	1602
Stock block & cyl. head	4001-5000	Fuel injection or one Holley 4150 1-11/16	1811

1. Engine, Rotary Piston
   a. Changing the capacity of the working chamber(s) is prohibited.

   b. The eccentric shaft may be replaced with another of the same basic material, but no changes in eccentricity of journal dimensions are permitted.

   c. The rotor is unrestricted providing the number of lobes remains unchanged.

   d. Alternate rotor housing is allowed only when submitted by the manufacturer and recognized by the Club Racing Board. No changes are allowed in the epitrocoidal curve in alternate housing.

   e. Rotary engine cars shall be equipped with a suitable muffler.

A.2. CSR AND DSR CLASSIFICATION

CSR engine and weight restrictions are given in A.2.a. DSR engine and weight restrictions are given in A.2.b. The remainder of A.2 applies to both CSR and DSR unless otherwise stated.

a. CSR Engine and Weight Restrictions

Shelby CAN AM Racer in CSR see 9.1.9.D
Oldsmobile Quad 4 Engine in CSR see 9.1.9.E
Enterprises Sports Racer in CSR see 9.1.9.F
Elan DP02 Sports Racer in CSR see 9.1.9.H

For the above engines and cars, specifications that are more restrictive in those sections take precedence over the general specifications in section A.2.a.

Generally applicable information for CSR engines and automobile weights are given in the following paragraphs. The table that follows provides general specification of engine types, displacement limits, head designs, intake restrictions and automobile weights allowed in CSR. Specific engines approved for use in CSR (along with any applicable restrictions) are also given in the table. All specified minimum weights are with driver (GCR section 9.3 Weight).

1. Unless otherwise specified, minimum weight is 1200 lbs.
2. Minimum weight for cars using four valve engines over 1300cc is 1300 lbs.
3. Minimum weight for cars using Rotary engines is 1300 lbs.
4. Cars are permitted to use the Pro FF2000 Spec Zetec motor at a minimum weight of 1300 lbs.
5. Fuel injection is allowed on all engines up to 1615cc, up to 4-valves per cylinder unless otherwise specified. Fuel injected engines shall use the same size venturis or restrictors as the specified carburetors.
6. Where a carburetor or fuel injection restriction is specified, either a venturi or other restrictor is required through which all intake air for each cylinder or the entire fuel-air mixture, if prepared before this point, shall pass.

   Where intake restrictors are specified, the restrictors shall be round orifices (unless otherwise specified) and located within four (4) inches of the throttle butterfly. Restrictors shall be a minimum of 0.060” thickness and of the specified diameter. *SIR location is unrestricted so long as all SIR criteria are met.*
7. Intake manifolds: individual runner, no plenum or balance pipes permitted unless using an SIR or otherwise noted on the engine spec line. Cars using an SIR may use any manifold type.
8. Where carburetors only are specified, the following carburetors are approved: Weber, Solex, SK, Mikuni and Del Orto
9. All non-motorcycle engines over 1300cc shall be derived from cars listed as eligible for the SCCA Production or GT Category, unless specifically allowed.
10. Engines over 1300cc may be modified as provided for in the current GT 2, 3, and Lite rules, except that the bore, crankshaft stroke, and flywheel are unrestricted, providing the appropriate specified displacement limit is not exceeded. Any alternate pulleys (all) allowed. A crankshaft dampener is allowed.
11. Enterprises Sport Racer cars are eligible to compete in the C Sports Racer class and must be prepared to all of the Enter-

prises specifications. Other variations of this chassis and/or engine must receive separate homologation and/or approval in these rules in order to be approved for competition.

12. Two-seat sports racers using up to 2.0 liter 4 cylinder, 4 cycle engines are eligible to compete in the C Sports Racer class subject to the following restrictions.

    Chassis shall be constructed to either of the following specifications:

    FIA Technical Regulations for Production Sports Cars – Group CN, Appendix J, Article 259, and the requirements of GCR 9.4.5.A, 9.4.5.B and 9.4.5.C., except that undertrays are unrestricted.

    The C Sports Racer class specification.

    Engines shall meet the requirements of line J in the engine table.

13. Subject to the restrictions in line K and L below, 4-cylinder, 4-cycle, production based automotive engines are allowed. No additional individual engine homologations of 4-cylinder, 4-cycle engines over 1600cc will be made.

Spec Line	Engine Series	Max. Displ. (cc)	Max. Valves / Cyl.	Notes	Req'd Restrictor	Min. Weight (lbs)
A	Turbocharged or Supercharged	765	NA	SIR shall be located upstream of the compressor inlet.	36mm venturis or 33mm SIR	1200
B	2 cycle	1200	NA	Maximum 4 cylinders	Unrestricted	1100
C	2 cycle	1350	NA		Unrestricted	1200
D	4 cycle Motorcycle-based	1355	NA		Unrestricted	1075
E	4 cycle Motorcycle-based	1455	NA		Unrestricted	1125
F	4 cycle Motorcycle-based	1615	NA		Unrestricted	1175
G	4 cycle	1615	2		Unrestricted	1100
H	4 cycle	2135	2		Unrestricted	1200
I	4 cycle	1615	4		Unrestricted	1300
J	4 cycle, 4 cyl.	2000	4	2 seat cars only per 9.1.9.A.2.a.12.	Unrestricted	1350

9.1.9. Sports Racing Category Specifications

Spec Line	Engine Series	Max. Displ. (cc)	Max. Valves / Cyl.	Notes	Req'd Restrictor	Min. Weight (lbs)
K	4 cycle, 4 cyl.	2500	2	over 1615 cc up to 2000 cc: 1300 lbs; over 2000 cc up to 2500 cc: 1350 lbs.	Under 2000cc, unrestricted; under 2500cc, 33mm SIR required, except less than 9:1 CR, unrestricted.	See Notes
L	4 cycle, 4 cyl.	2500	4	*over 1615 cc up to 2000 cc: 1300 lbs; over 2000 cc up to 2500 cc: 1350 lbs*	*Under 2000cc, 33 mm SIR required except under 10:1 CR, unrestricted; under 2500cc, 31mm SIR required except under 9:1 CR, unrestricted*	See Notes
M	Mazda 12A Rotary	NA	NA	Non-peripheral, non-bridge port	Unrestricted	1300
N	Mazda 12A Rotary	NA	NA	Bridgeport	One IDA 48mm w/ 38mm venturis or FI w/ 38mm restrictors per port	1300
O	Mazda 13B Rotary	NA	NA	Non-peripheral, non-bridge port	One 2 bbl auto-type carb w/ 46mm choke(s) or one 2bbl F.I. w/ 46mm restrictors	1300
P	Mazda 13B Rotary	NA	NA	Peripheral Port	38mm SIR	1300
Q	Mazda Renesis Rotary	NA	NA	Porting not permitted. Unmodified OEM lower intake manifold required, upper manifold unrestricted. Balance tube not permitted. Apex seals unrestricted. Fuel injection only.	70mm Throttle Body	1300

Spec Line	Engine Series	Max. Displ. (cc)	Max. Valves / Cyl.	Notes	Req'd Restrictor	Min. Weight (lbs)
R	Olds Quad 4	2300	4	Engine must conform to the specifications in 9.1.9.E.	See notes	1300

b. DSR Engine and Weight Restrictions

Type	Max. Displ. (cc)
2 cycle	900
4 cycle	1005
Rotary piston	450
4 cycle, 2 valves / cyl. max.	1025
Auto-based 4 cycle, 2 valves / cyl. max.	1305
Auto-based 4 cycle, 4 valves / cyl. max.	Any GTL engine prepared to GTL engine specifications, with individual runner restrictors or SIR, if required

Minimum weight of all chain and belt-drive cars is 900 lbs., with driver. All other cars are 1000 lbs., with driver.

No engines used in DSR shall have more than four cylinders.

DSR Induction:
Carburetion and fuel injection are unrestricted. Turbocharging and supercharging are restricted to engines less than 670cc with four valves or fewer per cylinder.

Rotary Piston Engines:
Cars with rotary piston engines by the NSU-Wankel patents shall be classified on the basis of a piston displacement equivalent of twice the volume determined by the difference between the maximum and minimum capacity of the working chamber.

Other Designs:
Turbine and steam-powered engines are prohibited.

c. Safety Equipment:

Shall comply with GCR Section 9. In addition:

1. Glass headlight lenses and bulbs on the front of the car are prohibited.
2. All cars shall provide protection for lower torso and legs of the driver by means of tubing and/or monocoque structure.

d. Bodywork (See GCR Section 9.)

Bodywork shall provide comfort and safety for driver and a passenger or for a driver only. All elements of the bodywork shall be completely and neatly designed and finished, with no temporary or makeshift elements.

1. The bodywork as viewed from the side and above shall cover all mechanical components except that the intake, exhaust, and radiators may be exposed. The bodywork shall extend over the full width of the tires for at least one-third (1/3) of their circumference as viewed from the side. Ventilation slots are permitted. The tires shall not be seen as viewed from directly above (i.e., along a line perpendicular to the axle intersecting the center of the top of the tire), although the rear tires may be exposed as viewed from the rear. Cycle-type fenders (which only cover the tire and are not continuous with the rest of the

body) are prohibited. Fenders shall be firmly attached to the bodywork with no gap between body and fender. Aerodynamic skirts are prohibited. See next Section for definition.

2. It is the intent of these rules to minimize the use of "ground effects" to achieve aerodynamic downforce on the vehicle.

   a. For the full width of the DSR body the floor pan will be a minimum of 45% of the wheelbase; the lower surface (surface licked by the air stream) shall not exceed 2.54 cm (1 inch) deviation in any longitudinal section through the plane forming the bottom of the tub or chassis floor. The 45% minimum (of the wheelbase) dimension is measured from the point that the surface meets the full width of the body (behind the front wheel or in front of the rear wheel). (This is not to be interpreted as requiring a floor pan beneath the motor, transaxle, transmission, or final drive housing.)

   b. No aerodynamic devices (e.g. "skirts," body sides, etc.) may extend more than 1cm (0.394 inches) below this lower surface anywhere on the car to the rear of the front axle. Seat bucket or other protrusions shall not circumvent this rule. Aerodynamic devices shall be securely mounted on the entirely sprung part of the car and not be movable when the car is in motion. It is not permitted to duct air through any part of the bodywork for the purpose of providing aerodynamic downforce on the car.

   c. All ducted air that exits through the top of the bodywork behind the rear of the front tires, excluding the cockpit opening, fender louvers, or slots, louvers, grills and similar devices for allowing heat to escape the engine bay, shall pass through a heat exchanger.

Figure 1 – Location of the Controlled Area

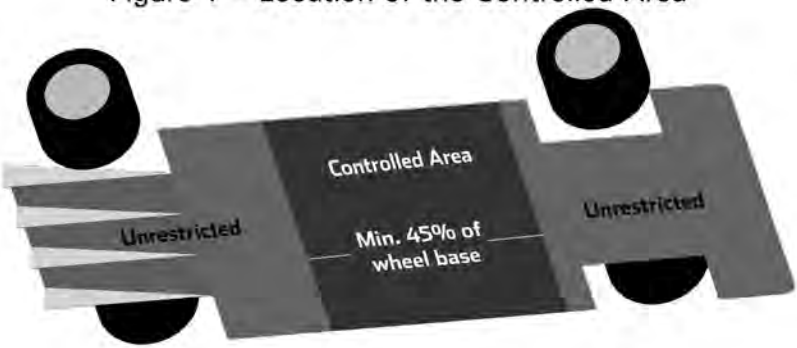

Figure 2 – Example Longitudinal Sections

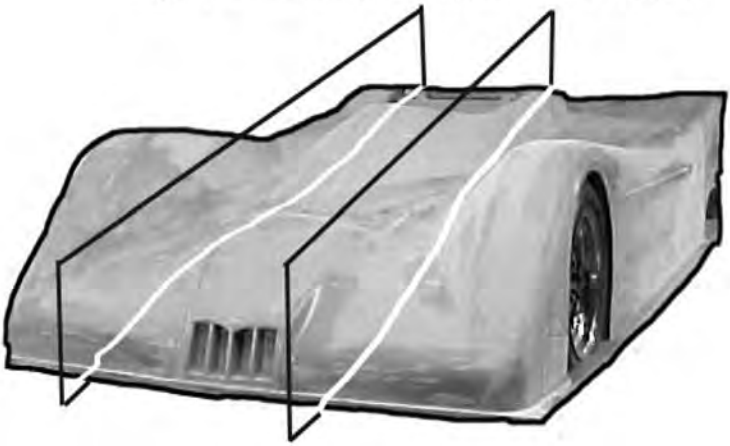

Figure 3 – Example Longitudinal Section Through Floor Pan in Controlled Area (Maximum Deviation 1 inch)

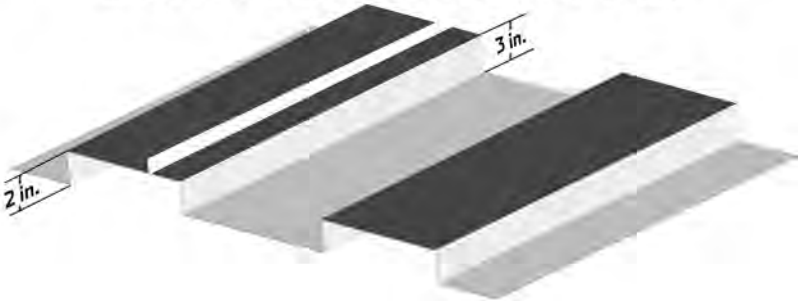

3. Dimensions
   a. Height: No part of the vehicle having special or significant aerodynamic function shall exceed a height of 115cm (45.25 in) above the ground with car in normal racing trim, driver aboard. Neither the safety roll bar nor the engine induction intake shall provide an aerodynamic downforce.

   b. Width: The maximum width shall not exceed 221cm (87 inches) including all aerodynamic devices. However, no portion shall extend more than 10cm (3.9 inches) beyond a plane tangent to the outer face of the front and rear wheels with tires. The minimum body width between the front and rear wheels shall not extend inwards beyond a vertical plane connecting the centerlines of the front and rear tires.

   c. Length: The maximum overall length shall be 485.3cm (191 inches).

   d. Cockpit: The driver's seat shall be capable of being entered without the removal or manipulation of any part or panel except for a removable steering wheel and/or cockpit padding (except for those closed cockpit cars which are specifically allowed by the SCCA). The cockpit opening shall comply with the following minimum dimensions for

both single and two seater sports racers: Cockpit length: 60cm (23.662 inches) Cockpit width for each seat: 45cm (17.717 inches) maintained over 30cm (11.811 inches) from the most rearward point of the seat backrest toward the front. Forward-facing roll bar and roll cage bracing and required padding are not considered part of the dimensions above. The cockpit openings of a non-metallic chassis shall be designed to meet FIA F3 homologation requirements (Article 275).

4. Visibility: Bodywork shall provide visibility for the driver forward and to both sides adequate for racing conditions. Rear view mirror(s) shall provide the driver with visibility to the rear of both sides of the car.

5. Windscreens are optional.

6. Bodywork shall provide comfort and safety for both driver and a passenger. There shall be seats of equal dimension and comfort for the driver and a passenger equally disposed on each side of the longitudinal axis of the car.

   Seats shall be firmly attached in the car, but may provide adjustment for the size of the occupant. The body surrounding the driver and passenger compartment shall be symmetrical about the longitudinal axis of the car. The passenger's space and seat shall remain usable throughout the competition and shall not be encroached upon by an element of the car or equipment except as provided in these Rules.

   Note: Paragraph 6 does not apply to single seat sports racers.

e. Wheels and Tires

There shall be no restriction on the size of wheels except for a minimum diameter of ten (10) inches, provided they are identical for the right and left front axles, and identical for the right and left rear axles. Left and right front tires will be the same size; left and right rear tires will be the same size.

f. Self Starter

Cars shall be equipped with an automatic self starter and on-board power supply operated by the driver.

g. Brakes

These cars shall be equipped with a dual braking system operated by a single control. In case of leak or failure at any point in the system, effective braking power shall be maintained on at least two (2) wheels. A separate hand brake (emergency brake) is not required.

h. Bulkheads and Tanks

Fuel tanks shall be isolated by means of bulkheads and vented so that in case of spillage, leakage, or failure of a tank, fuel and fumes will not pass into the driver or engine compartment or around any part of the exhaust system. No part of any oil or water tanks shall be exposed to any part of the driver or passenger compartment. Safety fuel cells (per GCR Section 9.3 Fuel Cell Specifications) are required for all cars.

i. Transmissions

All gear changes shall be initiated by the driver. Mechanical gear shifters, direct-acting electric solenoid shifters, air-shifters and similar devices are permitted. Electronically controlled differentials and devices that allow pre-selected gear changes are prohibited.

B. SPORTS 2000 PREPARATION RULES

B.1. Definition
Open cockpit two (2) seater rear engine sports racing car using a standard Ford 2000cc single overhead camshaft "NE" series engine with a two-venturi carburetor.

Sports 2000 is a Restricted class. Therefore any allowable modifications, changes, or additions are as stated herein. There are no exceptions. IF IN DOUBT, DON'T. Homologation is required for all cars registered after January 1, 1983.

B.2. Safety Requirements
All safety equipment shall comply with Section 9. of the GCR.

B.3. Chassis

a. Unrestricted except that the use of carbon fiber composite structural materials is prohibited. No engine oil or water tubes are permitted within the cockpit. The engine will be mounted upright and aligned fore and aft in the chassis.

   New chassis of non-metallic composite construction shall be proven to meet FIA specifications for non-metallic composite chassis prior to being submitted to the SCCA for homologation. Contact the SCCA national office for a list of the relevant FIA specifications/ SCCA requirements.

b. Swift DB-2 and DB-5 vehicles shall have a properly installed crush box fixed to the foremost bulkhead to protect the driver's feet. The box shall meet the following requirements:

   1. It shall enclose a volume of at least 864 cubic inches (.5 cubic feet).
   2. It shall extend at least 10 inches forward of the front bulkhead.
   3. It shall be constructed of aluminum at least .040 inches thick, carbon fiber or kevlar.
   4. The box may have access holes not exceeding 90 square inches in total.

c. All cars must have a longitudinal barrier in the left leg area forward of the dash substantially strong enough to prevent the left foot from moving more than 3 inches to the left of the vehicle centerline in the event of a side impact.

d. It is the intent of these rules to minimize the use of "ground effects" to achieve aerodynamic downforce on the vehicle. Thus, the chassis and body surfaces which comprise the underside of the car shall not deviate from a flat plane by more than 2.5cm (one (l) inch). This deviation may not be used to create an aerodynamic device. For this purpose the underside is defined as being within the rectangular area along the length between the front edge of the front wheels and the rear edge of the rear wheels and across the outside of the front and rear rims. No aerodynamic devices (e.g. "skirts," body sides, etc.) shall extend below this surface anywhere on the car to the rear of the front wheels.

B.4. Bodywork Including Airfoils

a. The body shall provide a cockpit for two (2) seats and cover all mechanical components including wheels and suspension members except for the exhaust pipe, induction system, and camshaft cover

which may protrude through the engine cover.

b. Between the front and rear axle lines the body shall:

1. Maintain over a minimum of 70% of the length of the wheelbase and over a depth of 20cm (7.9 inches) a minimum body width exceeding the greatest overall width across the tires less 15cm (5.9 inches).

2. Exceed in height the top of the tires over a width of 50cm (19.7 inches) excepting only cockpit and engine openings. There shall be no gap between the main body and the mudguards. The mudguards shall cover the full width of the tires around an arc of 120 degrees, which shall extend forward ahead of the axle centerline on the front and rear wheels and behind the rear wheels to at least 7.5cm (2.95 inches) above the axle centerline.

c. Maximum vehicle length forward of the front axle centerline: thirty-three (33) inches. Maximum vehicle length rear of the axle centerline: thirty-seven (37) inches.

d. The body above chassis level in the region of the cockpit shall not be reinforced in any way which would complicate or hinder the rescue of the driver. The cockpit opening seen in plan view shall be symmetrical about the longitudinal axis of the car and shall be large enough for a horizontal rectangle of 80cm (31.5 inches) by 40cm (15.75 inches) to be passed through with its minor axis aligned with the vehicle's longitudinal axis.

e. Space for two (2) seats shall be provided, each of at least 40cm (15.75 inches) width, and shall be positioned symmetrically about the vehicle's longitudinal axis. There shall be at least 25cm (9.9 inches) wide foot space for both driver and passenger measured at the pedals. The passenger space should provide as much seat space, elbow room, foot, and leg room in terms of length, width, and height as that of the driver. Battery boxes and fire systems are permitted in the passenger seat area.

f. Maximum height with driver on board, excluding safety roll-over bar and mirrors, shall not exceed at any time 90cm (35.4 inches) measured from the ground.

g. Airfoils and/or spoilers mounted at the front of the vehicle are permitted. These airfoils and/or spoilers may only be adjusted in a horizontal plane.

h. Adjustable airfoils and/or spoilers mounted at the rear of the vehicle shall be in the form of a flat plane and may only be adjusted within +/- 20 degrees of vertical.

i. There shall be no gap between these surfaces, or other airfoil, and the main bodywork.

j. All ducted air for heat exchangers (water/oil) shall pass through those heat exchangers.

B.5. Engine

The only permitted engine is the Ford 2 liter single overhead camshaft "NE" series engine or the 1971-74 Pinto/Capri 2 liter single overhead camshaft engine with nominal bore 90.84mm and stroke 76.95mm (Note: All blocks shall contain casting number HM6015BA, HM6015AA, HM6015BB, HM6015AB, HM6015DA, or HM6015AD. Dashes in the casting number are not relevant.). Production tolerances are permitted providing the total swept volume does not exceed 2000cc.

a. The rockers shall remain entirely unmodified. Alternate manufacturers may be used as long as the original materials and dimensions are the same. Camshafts must be from Ford Motor Company, or Crower part #E-5753 FF2000, or any camshaft that is a replica of the original camshaft and of the same material may be used. Camshaft geometry shall be stock. An alternate optional camshaft, Elgin part number 2000FC, may be used only in the original iron head. Regrinding camshaft lobes is permitted as long as the camshaft lobe center is 112° ± 2°. Offset keys are permitted. Tuftriding or Parkerizing is permitted. Maximum valve lift at determined points by camshaft rotation will be established. The use of a low rate substitute valve spring is permitted. Load characteristics of special checking spring: twelve (12) pounds at 1.417 inches, thirty (30) pounds at 1.000 inches. An adjustable camshaft sprocket which retains the same number of teeth and pitch as the stock sprocket may be used.

b. A standard crankshaft shall be used or any crankshaft that is a replica of the original crankshaft and of the same material may be used Spot machining to achieve balance is permitted. Tuftriding, Parkerizing, shot peening, shot blasting, and polishing are permitted. Minimum weight: twenty-seven point five (27.5) pounds.

c. The flywheel shall be a standard component or the approved alternate: Elite-001. The minimum weight is 14.4 pounds with ring gear. The flywheel may be machined to achieve minimum weight. Spot machining to achieve balance is permitted. Flywheel bolts are free and locating dowels are permitted. A 1600 GT starter ring may be fitted. The use of any single plate clutch is permitted provided no modification is made to the flywheel other than changing the points of attachment of the clutch to the flywheel. Carbon fiber clutches are not permitted.

d. Maximum compression ratio will be controlled as follows:
   1. Minimum Cylinder Head combustion chamber volume 49cc (not including head gasket). Polishing and/or tooling of the cylinder head to achieve only the required combustion chamber volume is permitted.
   2. Standard Ford gasket, Fel-Pro #8361PT, or Ferrea part number G50100 may be used. Gaskets will have a minimum thickness of .9mm, and a minimum diameter of cylinder aperture 92mm.
   3. Pistons shall not protrude above cylinder block surface at TDC.

e. It is permissible to reshape inlet and exhaust port by removal of metal within limits. Addition of material in any form is prohibited. Maximum diameter of inlet port at manifold head face 39.5mm. Maximum dimensions of exhaust port at manifold face 35.5mm x 27mm. The distance between the valve centers and the angles of the valves shall not be altered.

f. Pistons shall be standard Ford Mahle, AE Hepolite, CP, or J&E. Pistons must be unmodified in any way except for balancing and as detailed herein.

   The following combinations are permitted:

   1. Mahle piston P/N 80HM6102LA with rings, pin, connecting rod (with bolts), but without bearings:Minimum permitted weight = 1332.5 grams.
   2. Mahle piston P/N 85HM6102DA with rings, pin, connecting rod (with bolts), but without bearings: Minimum permitted

weight = 1240 grams.

NOTE: This piston may have either casting #90V108 or #90V118.

3. AE Hepolite piston P/N 21426, casting P/N 21426 (AE Hepolite) with rings, pin, connecting rod (with bolts), but without bearings: Minimum permitted weight = 1240 grams.

4. CP Pistons P/N IV 2.0 LTR with rings, pin, connecting rod (with bolts), but without bearings: Minimum permitted weight = 1240grams. Part number and Ivey logo stamped on wrist pins bosses.

5. J&E piston P/N M-6102-B200 with rings, pin, connecting rod (with bolts), but without bearings: Minimum permitted weight = 1240 grams.

NOTE: M-6102-B200 piston assembly is now made by JE and is visually different. I.D. Marks: M-6102-B200, Ford racing logo. All marks pin stamped on wrist pin bosses.

Piston rings are unrestricted provided that:

1. One oil control and two compression rings are used.

2. No modification is made to the piston for the installation of rings.

Localized machining of the gudgeon pin bosses to achieve balance and weight by simple machining; all external surfaces, dimensions, and profiles shall remain standard with the exception of the top surface of the piston crown which may have simple machining to achieve balance, and as required in Section 9.1.9.B.5.d.3.

g. Valves may be of Ford manufacture or Ferrea part numbers VSOIN200 and VSOEX2000. Valves shall remain standard; no reprofiling or polishing is permitted.

The original forty-five (45) degree seat angle shall be maintained.

Maximum face diameter inlet 42.2mm.

Maximum face diameter exhaust 36.2mm.

Maximum valve stem diameter 8.4mm.

h. Full connecting rods may be standard Ford, Cosworth, Oliver, or Crower. The approved Crower part numbers are SP93230B-4 or SP93230PF-4. Any rod bolts may be used. Floating piston pins may be used. Standard rod length must be 5.00 inches (+.005” -.010”). Machining is permitted to remove metal from the balancing bosses to achieve balance only. Tuftriding, Parkerizing, shot peening, shot blasting, polishing, etc., are permitted.

i. Maximum valve lift against cam angle with zero tappet clearance: (Lift measured in mm)

	Inlet		Exhaust	
Angle	**Opening**	**Closing**	**Opening**	**Closing**
0	10.442	10.442	10.442	10.442
5	10.36	10.36	10.36	10.36
10	10.11	10.11	10.11	10.11
15	9.69	9.69	9.69	9.69
20	9.11	9.11	9.11	9.11
25	8.37	8.37	8.37	8.37

30	7.45	7.45	7.45	7.45
35	6.38	6.38	6.38	6.38
40	5.17	5.17	5.17	5.17
45	3.86	3.86	3.86	3.86
50	2.59	2.58	2.58	2.59
55	1.5	1.47	1.47	1.5
60	0.86	0.81	0.81	0.86
65	0.65	0.56	0.56	0.65
70	0.54	0.43	0.43	0.54
75	0.46	0.33	0.33	0.8
80	0.37	0.19	0.19	0.37
85	0.26	0.08	0.08	0.26
90	0.2	0.01	0.01	0.2

j. Engines will be mounted upright, and aligned fore and aft in the chassis.

k. A single carburetor only will be used on a standard inlet manifold. The carburetor will be a Weber 32/36 DGV 26/27mm venturi, its origin being from a 1600 GT "Kent" or 2000 SOHC NE engine. The Holly 5200 32/36 carburetor also may be used; carburetor with the swaged fuel inlet fitting shall be replaced by drilling and tapping the carburetor body for a threaded fitting. The air cleaner may be removed and a trumpet fitted, and jets may be changed, both throttles may open together, cold start devices and diffused bar may be removed, internal and external antisurge pipes may be fitted, and seals on emission control carburetors may be removed. The bottom of the lower column portion of the auxiliary venturi may be machined for purposes of high speed enrichment. No other modifications are permitted. Chokes (venturi) shall remain standard and no polishing or profiling is permitted.

l. The addition of material by any means to any component is prohibited.

m. It is permitted, as a means of repair, to replace damaged valve seats and cylinder bores by replacement cast iron valve seat inserts and cast iron cylinder liners; valve guides may be replaced with cast iron or bronze, all to standard dimensions. Repairs to the cam towers to facilitate replacement of cam bearing and/or replacements of broken or cracked towers is permissible as long as the cam bearing center line is not changed and that one original cam tower ir retained. Line boring of cam bearing caps is permitted.

n. Balancing of reciprocating and rotating parts is permitted only by removal of metal from locations so provided by the manufacturer.

o. Non-standard rocker covers are permitted providing they in no way improve the performance of the engine.

p. Standard valve spring retainers shall be used, and single valve springs only are permitted. Shims are permitted, and valve springs are otherwise free.

q. Exhaust system and manifold are unrestricted, within SCCA safety regulations.

r. Lubrication system is unrestricted; dry sump is permitted. Localized machining of the cylinder block is permitted to allow fitting of the oil pump.

s. Oil coolers are unrestricted.

t. Cooling system unrestricted. The radiator, if housed in or incorpo-

rating a cowl air-scoop deflector, shall comply with body regulations.

u. Fuel Pump: Unrestricted.

v. Distributors are unrestricted providing they retain the original drive and location. The distributor is defined as the component which triggers the L.T. current and distributes the H.T. current.

The Ignition Timing may only be varied by vacuum and/or mechanical means.

It is prohibited to use any other method or component to trigger, distribute, or time the ignition.

w. Only the standard inlet manifold shall be used. The ports may be reshaped by the removal of metal as long as the following dimensions are maintained: maximum size at head face = 1.437" (36.5mm), maximum size at carburetor flange = 3.405" (86.5mm) x 1.595" (40.5mm). The carburetor seat face may be machined to horizontal in the fore to aft plane. The diameter of the ports may exceed the above listed dimensions if the casting bore is untouched and in its original state. The water passages in the inlet manifold may be plugged. Holes in the inlet manifold resulting from the removal of emission/vacuum lines shall be plugged.

x. Gaskets and seals are unrestricted except for cylinder head gasket, that has the requirements listed in B.5.d.2. and the intake gasket. The intake gasket thickness must not exceed 1.1mm. Intake gasket is not to be construed as a spacer.

y. Pump, fan, and generator drive pulleys are unrestricted.

z. The crankcase breather may be altered or removed, but all breathers shall discharge into a catch tank.

aa. Mechanical tachometer drives may be fitted.

bb. Generators are optional.

cc. Standard oversize and undersize bearings are permitted. This does not allow reducing the bearing surface area by reducing the width of standard bearings.

dd. The use of non-standard replacement fasteners (nuts, bolts, screws, studs, and washers) which are not connected with or which do not support the intake manifold or any moving parts of the engine is permitted.

ee. Only modifications or additions specifically covered by these regulations are permitted. All engine components not covered by these regulations shall remain completely standard and unmodified. When a system is specified to be "unrestricted" (e.g. paragraphs r and t), the restrictions of this paragraph do not apply.

ff. The use of the Fast Forward aluminum cylinder head is permitted. The following dimensions must be maintained.

Intake port maximum volume	70.0 cc.
Exhaust port maximum volume	52.0 cc.

Intake port surface to exhaust port surface 5.580 +/- 0.020 inches

Intake valve center line to (adjacent) intake valve center line 4.015 +/- 0.015 inches

Exhaust valve center line to (adjacent) exhaust valve center line 4.015 +/- 0.015 inches

The machine tool marks in the intake and exhaust ports must remain untouched for 0.750 inches from the respective gasket surfaces.

B.6 Suspension
All parts shall be of steel or ferrous material, with the exception of hubs, hub adapters, bell cranks, pivot blocks, and bushes. Front and rear hub carrier material shall be steel or aluminum alloy. Titanium prohibited. Springs: steel only. (Rear hub carrier material on car manufactured before January 1, 1983 is unrestricted, but replacement parts shall be steel or aluminum alloy.)

B.7. Brakes

a. Only the following ferrous calipers are permitted: AP LD19, AP LD20, AP LD65, ICP-20L/R, ICP-65R, ICP-14F, Girling 12SP and Girling 14F.

b. Aluminum alloy calipers of two-piece construction (split into two halves that are fastened together by bolts) having no more than 4 pistons and 2 brake pads are permitted. Spacers placed between caliper halves to adjust for rotor width are permitted. Maximum one caliper per wheel.

c. Brake rotors must be ferrous. Rotor hats / bells must be ferrous or aluminum alloy.

d. Brake system otherwise unrestricted.

B.8. Shock Absorbers
Design: Unrestricted. Case material: steel or aluminum alloy.

B.9. Steering
Unrestricted.

B.10. Wheels and Tires
Thirteen (13) inch diameter wheels with maximum front rim width of six (6) inches and rear eight (8) inches are the only wheel sizes permitted. Material is unrestricted providing it is metal.

B.11. Transmission

a. The gearbox shall include an operable reverse gear, capable of being engaged by the driver while normally seated, and contain not more than *five* forward gears. *Five forward gears are permitted with a 25 lb. weight penalty.* The ratios are unrestricted.

b. Rear wheel drive only is permitted.

c. Final drive ratio is unrestricted.

d. The differential cannot be modified in any way to limit its normal function. Torque biasing, limited slip, and *locking / locked* differentials are prohibited. Excessive shimming of the differential is prohibited.

e. The use of automatic *shifting* gearboxes is prohibited. *Sequentially shifted gearboxes are permitted.*

f. *Electro-mechanical, electronic, hydraulic, pneumatic, and/or similarly operated gear change mechanisms and differentials are not permitted. Gear changes must be made through direct mechanical linkage, e.g. by rod or cable. Devices that in any way automate engine speed matching, interrupt ignition, and/or interrupt fuel for the purpose of assisting a gear change are not permitted.*

g. Gearboxes with shafts that are transverse to the longitudinal axis of the chassis are not allowed. The sole exception is the gearbox final drive (crownwheel) shaft axis and final drive shafts (half shafts). All change gears must be located in the case aft of the final drive.

B.12. Fuel Capacity
41 lit. (10.8 gal) maximum.

B.13. Weight
1310 lbs., minimum.
1335 lbs., minimum with aluminum cylinder head.
1335 lbs., minimum with alternate camshaft.

B.14. Windscreens are optional

B.15. Bulkheads and Cells
Fuel cells shall be isolated by means of bulkheads and so vented in case of spillage, leakage, or a failure of the cell that fuel and fumes will not pass into the driver or engine compartment or around any part of the exhaust system. No part of any oil or water tank shall be exposed to any part of the driver and passenger compartment. Safety fuel cells, as listed in Section 9.3 Fuel Cell Specifications, are required for cars registered after January 1, 1983. There shall be a liquid tight and fireproof bulkhead separating the fuel tank(s) from the cockpit.

C. SPEC RACER FORD

C.1. Definition
One design, fixed specifications, open cockpit, single seat sports racer with Roush/Ford 1.9 L engine. Cars are packaged and sold by SCCA Enterprises, Inc. All replacement parts are supplied through SCCA Enterprises, Inc., and shall be official Spec Racer Ford parts except where noted in C.3., also Motorcraft or Roush parts as noted. Cars must be assembled per SCCA Enterprises' Assembly Manual and Roush Ford Spec Racer Installation Instructions.

C.2. Safety Requirements
Car will be delivered from the manufacturer with approved safety equipment. Replaced items shall be supplied through Enterprises, except safety harnesses and on-board fire systems may be replaced by any other that conforms to GCR Section 9.

C.3. Maintenance and Repairs
It is permitted to perform routine maintenance and repairs as long as existing parts are in no way modified and replacement parts are official Spec Racer Ford parts. If any official Enterprises' or Roush seal is broken, by accident or intent, the procedures outlined under C.20., shall be followed. Parts with an Enterprises part number having the prefix "R10" are considered to be unrestricted, providing their dimensions are comparable. No other parts are to be considered "unrestricted" except where specified.

C.4. Chassis
NO MODIFICATIONS ALLOWED except as noted in these rules.

a. Chassis rub block. It is authorized to install up to eight (8) pads of any material to the underside of the frame to eliminate damage due to bottoming out. The pads shall be no larger than 1-1/2" wide x 2" long x 1" thick. If steel plates are used, they can be no larger than 1-1/2" wide x 8" long x 1/8" thick and fastened in at least two (2) places. They shall serve no other purpose. Carriage bolts may be

used to fasten rub rails to the chassis.

A steel plate of 1-1/2" wide x 1/8" thick x 14" long may be welded to the bottom of the frame below the rear shock mounting bracket.

b. Seat Mounts. It is required that a metal strap be installed on the right side of the seat between the bolt heads and the fiberglass side panel; this strap shall be 1" wide x 14" long and 1/8" minimum thickness. A flat washer of at least one (1) inch diameter shall be used under any other seat attachment point. The aluminum side bracket, P/N 1380927, is required. Alternate seat belt mounting points may be installed in accordance with Enterprises' drawing 1390022.

c. Steering Shaft Bracket. It is authorized to cleanly and smoothly cut off the unused portions of the steering shaft bracket and/or pad the remaining portion to prevent injury as long as this serves no other purpose.

d. Painting/Plating. The chassis may be painted any color(s). Aluminum parts may be polished, anodized, coated or painted.

Surface finishes such as plating or coating may be applied for corrosion protection. Any piece that is a closed assembly (i.e., upper control arm) shall have a 1/8" DIA hole drilled in a noncritical location to allow flushing of any entrapped plating fluids.

Post plating bakeout of four (4) hours at a temperature of 375 degrees F is recommended to prevent hydrogen embrittlement. Any chassis part may be plated except for: Suspension springs, front and rear sway bars.

e. A 16 gauge steel plate measuring 10" x 28" may be added under the fuel cell bladder above vehicle floor.

C.5. Bodywork

NO MODIFICATIONS ALLOWED (except as specified)

a. Bodywork crash-damage may be repaired, but exterior dimensions, shapes, thicknesses, and profiles shall remain unaltered. The addition of material to increase rigidity and/or the weight is prohibited. Sections shall meet the following weight requirements:

	Minimum	Maximum
Front	35 lbs.	65 lbs.
Center	25 lbs.	N/A
Rear	30 lbs.	N/A

b. At-track repair of crash-damage may be completed, but the minimum and/or maximum weight requirements may not be exceeded.

c. A spring-type fastener may be used to replace the 1/4 turn fastener located to the rear of the front wheel.

d. The car may be painted any color(s), except primer.

e. The forward braces shall be padded per GCR Section 9.4., using any padding that conforms to the GCR, or Enterprises P/N 1380786.

f. Ballast plates may be manufactured or purchased providing:
   1. Ballast plates may be no more than 20 inches long, 10 inches wide or ½ inch thick.
   2. They shall be mounted in the same manner as the Enterprises' part.
   3. They shall be mounted only in approved locations.

4. They shall be fastened securely with nuts on both ends.

g. Rub Rails - P/N 1380557 LH; P/N 1380558 RH, may be fabricated from .060" thick aluminum. Dimensions shall be 2-1/2" high x 3" wide x 72" long. Additional fasteners may be used.

h. Nose Pans - P/N 1380448 may be fabricated from .040" - .060" thick aluminum. Such nose pans must be dimensionally and functionally the same as to the original nose pan furnished by Enterprises and shall perform no other function.

i. Floor Pans - P/N 1380434, may be fabricated from .060" thick aluminum. Such floor pans shall be dimensionally and functionally the same as to the original floor pans furnished by Enterprises and shall perform no other function.

j. Optional Bodywork Modification:
Viewing the tail section of the car from behind, draw a vertical line at the left and right ends of the outer vents from the bottom edge of the bodywork up to a point two (2) inches below the crease at the lower edge of the vented panel. Make a vertical cut at each line. The horizontal cut is to be one (1) inch below the crease at the base of the vented panel. Leave a one (1) inch radius at each corner. Air Scoop (P/N F0190000) must be installed in conjunction with rear cutout per Enterprises installation instructions.

An alternate dash panel has been approved for use in Spec Racer Fords. The dash will be furnished by Enterprises only. P/N 180100 or 180101

k. Required Bodywork Modification:
A 22.5" diameter wheel arch shall be cut in each side of the tail section. Viewing the tail section from the side, draw a vertical line at the drive axle centerline. Locate the top of the wheel arch at a point measured from the bottom edge of the tail section 9.25" vertically along the centerline. The 22.5" diameter circle intersects the bottom edge of the tail section 11.1" either side of the centerline. The tail section may be reinforced in the forward and aft portions of the wheel arch. Dimension tolerance is +/- 0.75".

C.6. Engine and Drivetrain

a. Engine

NO MODIFICATIONS ARE ALLOWED EXCEPT WHERE SPECIFICALLY AUTHORIZED WITHIN THESE RULES. This includes all fuel injection and engine management components, including exhaust, cooling, electrical and lubrication systems. All systems are subject to test procedures and must conform to OEM/Roush specifications. All fluids, except fuel, are unrestricted.

Ford recommends SAE 5W-30 or 10W-30 engine oils and Dexron II transmission fluid.

Roush and Enterprises, Inc., seals on the engine, gearbox, and other components shall remain in place at all times.

Engine maintenance which is permitted includes the replacement, but not modification of external engine and engine systems parts.

All hose and harness routing and attachment is per ROUSH/FORD SPEC RACER INSTALLATION INSTRUCTIONS (RFSRII).

All rubber oil lines may be replaced with braided metal-covered (Aeroquip type/size eight) lines that utilize Aeroquip type/size 8 AN fittings. Hose clamps may be installed on the rubber oil lines.

A one-fourth (1/4) inch pipe thread hole may be placed in the top of the thermostat housing for installation of an air relief valve to facilitate filling of the cooling system.

b. Transmission

THE TRANSMISSION IS A SEALED UNIT. NO MODIFICATIONS ARE ALLOWED.

Transaxle/drivetrain work which is permitted includes replacement, but not modification, of axles, CV joints, clutch disc, pressure plate, flywheel, throw-out or pilot bearing, or transaxle assembly.

Any tampering or counterfeiting of the seals will render the transmission illegal for competition. Neither Enterprises, Inc., nor Roush Industries will be under any obligation to return the transmission to legal condition. No machining allowed.

C.7. Suspension

NO MODIFICATIONS ALLOWED. Adjustments are permitted within the limits of the suspension components. (See specifications - Section J.) No modification to the components is allowed, with the exception that a Zirk fitting may be installed on the upper rocker arms to lubricate the pivots.

Left rear lower control arm must be per RFSRII, and may be used on right side.

C.8. Brakes

NO MODIFICATIONS ALLOWED. Required front air ducts shall be installed. An extension may be welded to the side of the throttle pedal to improve heel-and-toe braking. Original rubber brake lines may be replaced with braided metal-covered (Aeroquip-type/size 3) brake lines. Replacement lines shall attach to all braking components with no modifications. Brake pad “anti-rattle” clips may be removed.

C.9. Shock Absorbers and Springs

NO MODIFICATIONS ALLOWED. Bump stop shall remain on shock but may be slit vertically to ease removal for shock adjustment. The same brand of shock absorbers must be used in all shock absorber positions on the car.

All shock absorbers must be sealed by Enterprises. Prior to sealing, the shock absorbers will be rebuilt by Enterprises or its authorized rebuilder. Effective1/1/2001.

C.10. Steering

NO MODIFICATIONS ALLOWED. The steering rack may be shimmed with any combination of standard shims P/N 1380286 or P/N 1380287 to eliminate bump steer.

a. Steering wheel is unrestricted. A removable steering wheel is allowed. The steering wheel center web, flange, and rim shall be of a one piece construction. “Butterfly” steering wheels are not allowed.

b. Upper steering shaft may be modified to accept an alternate steering wheel and/or hub (if applicable).

C.11. Wheels (Only wheels supplied by Enterprises)

NO MODIFICATIONS or MACHINING ALLOWED except to mount valve stems. Wheels may be painted any color(s). Plating is allowed. All wheel bearings shall be run with grease (not oil), no special coating of the bearings is allowed, and the bearing grease seal shall be intact (unmodified). Only ferrous bearing housing and balls or rollers are permitted. Wheel spacers are not allowed.

C.12. Fuel System
All changes from the Renault SR system are listed in the RFSRII and must be installed as directed therein, with no modifications.

a. All rubber fuel lines may be replaced with braided metal-covered (Aeroquip type/size six) lines that utilize Aeroquip type/size 6 AN fittings.

b. The fuel filter located in the fuel cell may be removed and replaced with an in-line filter, P/N FLIPR-ANG.

c. A "tee" fitting may be installed in the Aeroquip line between the fuel cell and the fuel pump to facilitate draining of the fuel cell.

C.13. Electrical System
NO MODIFICATIONS ALLOWED.

Wiring harnesses routing and attachments as per RFSRII.

The electrical system and ignition system is subject to testing procedures and must conform to OEM Roush specifications.

The EEC module is a sealed part and any tampering with the part or tampering and/or counterfeiting of the seals will render the part illegal for competition. Tampering and/or counterfeiting will also subject the driver to penalties under headings C.21.1., C.21.2., C.21.3., and C.21.4..

At any time during an SCCA sanctioned event it is possible that technical or scrutineering personnel will randomly remove and replace EEC modules or other components with other competitor's components or components which the technical or scrutineering personnel will provide.

C.14. Weight
The car shall weigh 1670 lbs. minimum, including the driver.

C.15. Battery
May be replaced with any battery of group No. U1. It shall remain in the same location.

C.16. Vehicle Configuration
All Spec Racer Ford cars shall comply to GCR Section 9., with the following exceptions: Section 9.3 Accumulators.

C.17. Updates
Provisions will be made for updates on all safety and mechanical improvements. Such updates will be effective when authorized by Enterprises, announced by the National Office, and published in FasTrack.

C.18. Vehicle Logbook
The Vehicle Logbook for each Spec Racer Ford remains the property of SCCA and will contain not only the record of technical inspections, but also the major maintenance performed and all transfers of ownership. The Vehicle Logbook number will be the same as the factory chassis number that is stamped on the right rear body mount plate. When the vehicle is sold, traded, or scrapped, the logbook shall be sent to SCCA Enterprises, Inc., 14550 E Easter Ave. Suite 400, Centennial, Colorado 80112. The logbook will be reissued to the new owner. When the logbook has been filled, a new one shall be requested from SCCA Enterprises, Inc., in Centennial.

A FEE OF $200 WILL BE CHARGED FOR LOST LOGBOOKS.

The logbook shall be presented at scrutineering for each event entered. All Spec Racer Fords are subject to normal safety inspection. Each entrant is required to have in his possession at every race, a RFSRII book to aid scrutineers in identifying parts and correct configurations for each car.

Additionally, scrutineers will check each official seal. A competitor may not be barred from competing at a specific event if a seal is broken, or damaged, but the part may be considered suspect and will be treated as such and will be noted in the logbook by the Scrutineer. If engine cam cover or oil pan seals are broken, damaged, or missing, the engine shall be removed and sent to Enterprises for testing and resealing at the competitor's cost prior to the next event.

C.19. Seals

Enterprises' seals and Roush seals on engine are required for all races. Any competitor who runs an event without all proper engine seals in the required locations shall have his engine removed and shipped to Enterprises for testing and sealing after that event. The competitor will be responsible for all cost incurred by this procedure regardless of the findings, and subject to penalty by the SOM if engine is found to be not as specified.

Enterprises, Inc., and Roush seals are required on all SPEC RACER FORD engines.

Any counterfeit engine seal found by an authorized representative of SCCA, Inc., or SCCA Enterprises, Inc., shall immediately render that engine illegal for further use, without need of dyno testing or inspection. SCCA Enterprises, Inc., and Roush Industries will not be under any obligation to bring an illegally sealed engine back to legal condition. Penalties shall include all of the following: C.20.1., C.20.2., C.20.3., and C.20.4.

C.20. Penalties (Specific to Spec Racer Fords)

If a competitor refuses to give his engine and/or transaxle units for testing per a request of the Chief Steward (GCR 5.12.2.C.), the following penalties will automatically be imposed:

a. Vehicle logbook will be impounded.

b. Disqualification from the event.

c. Suspension of SCCA competition privileges for thirty (30) days.

d. The car and drivetrain are suspended from competition until the unit(s) specified by the Chief Steward are replaced.

In a case where a competitor does comply with the Chief Steward's request to have an engine and/or transaxle tested and the impounded unit(s) are found legal, the SCCA will stand all the costs incurred for the testing, including shipping. Should the impounded unit(s) be found illegal, the following penalties will be imposed:

1. Disqualification from the event.

2. A fine of $250.00

3. Competition privileges will be suspended immediately, and the suspension will continue for a minimum of thirty (30) days after the date when all fines and costs are paid in full and the license is received by the Chairman SOM or the SCCA Topeka Office.

4. For a second illegal drivetrain offense, the competitor will be permanently disqualified from further Spec Racer Ford competition.

C.21. Spec Racer Ford Drivetrain Protest

a. Protests shall be filed per the GCR.

b. Protestor will specify the drivetrain item suspected (i.e., transmission or engine). The teardown bond to remove the motor and transmission is in three (3) parts:

1. Remove and replace motor and transmission - $400.00
2. Ship motor to Enterprises and test - $500.00
3. Protest Fee: Regional - $25.00, National - $50.00 Item 1 will be done by the CSR or other shop that is equipped for this type of work and will be paid directly.

c. Enterprises will inspect the motor, (item 2), and will notify the Chairman SOM as soon as possible as to the results.

d. Enterprises shall retain the evidence, and the SCCA shall retain the fee, (item 3), until the period for appeal has passed.

e. The Chairman SOM is required to inform Enterprises of the protest using the SR/SRF Protest Information Form.

If the protest proves to be valid and any appeal fails, the protest fee, (item 3), will be returned to the protestor. Also, the protestee will be required to reimburse the protestor the remaining fees ($900). The protestee will not be allowed to compete again until all costs are paid. If found legal, protestor forfeits fee (items 1 and 2) above.

f. If found illegal, competition privileges will be suspended immediately, and the suspension will continue for thirty (30) days after all costs are paid in full.

g. For a second illegal drivetrain offense, the competitor will be permanently disqualified from competing in Spec Racer Ford competition.

C.22. Accessory Items

a. Mirrors. The cars may be upgraded to the new mirrors, P/N 1390007, and may use mirror extension, P/N 1390023. The original mirrors furnished with the kits may be used.

b. Seat modifications, including cutting, re-shaping and padding, are permitted to enhance the comfort and safety of the driver. Moving the location of the seat is not permitted. Foaming of the seat is permitted. Taller drivers are encouraged to use this option to gain greater roll bar clearance. Additionally, the seat may be cut or slit to allow the seal belt to cross the driver's body and remain in proper alignment per the GCR, Section 9.. Any cuts in the seat should be reinforced to prevent splintering. The seat may be widened, but installation and location shall remain the same (See j. below).

c. Use of cool suits by drivers is authorized providing the water tank is securely mounted and approved through Tech. The car shall weigh 1670 lbs., with driver, but without the water tank.

d. Headrest pad may be reduced in thickness for driver's comfort to a minimum of one (1) inch.

e. Two-way radios may be installed in the car. All components shall be securely attached and approved by Tech inspection.

f. Racers tape may be used to repair crash damage, or as a precautionary means of securing the body retaining latches. Crash-damage is defined as having occurred during the current event, and the tape should be of an appropriate color if possible. Tape cannot close body seams.

g. Electronic memory tachometers from Auto Meter or Stack are allowed. NO MODIFICATION of the vehicle wiring harness is allowed. The power lead (+12V DC) shall be connected to the battery side of the ignition switch (not master switch).

h. A throttle return spring may be added at the foot pedal.

i. The addition of a metal floor pan in the area of the foot pedals/ driver's feet, size shall be 27.87" x 21.56" x 1.25" made from sixteen (16) gauge metal.

j. Aluminum Racing Products (ARP) seat may be installed. If installed the bracket kit furnished with the seat shall be utilized and unmodified. Butler seat P/N 180268 may be installed.

k. Radiator - P/N 1380466, may be replaced with Modine P/N 1R698 or equivalent OEM manufacturer justified by one cross reference chart. The capacity, core thickness, etc., cannot be changed event if allowed under the above. The competitor is responsible for providing this documentation.

l. The center pedal divider may be removed in its entirety.

m. All gauges may be replaced with those of alternate manufacture. Replacement gauges shall fit in the existing dash and attach to the spec harness. Additional gauges may be added and shall fit in the existing dash, with all wiring inside the body, easily traceable, and separate from the existing harness. Gage fittings may be added.

n. Rod ends may be replaced with rod ends having specifications equal to or greater than the OEM supplied rod ends. Replacement rod ends shall be capable of being installed with no modifications to any original components.

o. Original rubber clutch lines may be replaced with braided metal-covered (Aeroquip-type) size three (3) lines. Replacement lines shall be the same length as the originals as supplied by Enterprises.

p. Master cylinder caps are free.

q. The exhaust system may be thermal-coated and/or wrapped.

r. Spark plug wires may be fire sleeved.

s. Chassis/Engine data gathering systems may be installed. The data gathering system must have a separate wiring harness with visible wire tracing ability.

t. It is forbidden to regroove tires.

u. Anti-roll bars (swaybars) may be disconnected, but not removed.

v. At the option of the owner a brake bias adjuster is permitted to be permanently installed and may be connected for all on-track activity. The control knob shall be installed in the cockpit in a position that is easily accessible to the driver. The Spec Racer Brake Bias Adjuster Kit, PN R0880914, will be available through Enterprises and shall be the only approved adjuster. The kit must be installed per the instructions that accompany the kit.

w. At the option of the owner, PN F0390522 Enterprises Muffler Kit may be installed per instructions that accompany the kit.

x. It is permitted to insulate engine compartment fluid hoses using heat sleeve or wrap.

y. Spark Plug wire looms are allowed.

z. Exhaust gasket, Ford part number FOFZ 9448 A is allowed.

aa. It is permitted to remove the gear from the end of the transmission

speed sensor/dipstick or replace that part with an appropriate metal plug.

bb. It is permitted to remove wiring harness plugs which are not used in the Ford conversion.

cc. Alternate thermostat allowed is Standt P/N 3582/BT382180. Installation of this thermostat requires replacing the rubber sealing gasket and housing to head gasket, both available at Ford dealers or aftermarket suppliers.

dd. It is recommended to use a 5.5 to 6 foot length of hose to run between the cam cover and air box, routing the hose forward and up along the roll bar support from the cam cover, before looping the vent hose back down to the air box. This is to keep oil from running directly from the engine's cam cover vent to the air filter.

ee. Alternate (recommended) location of the water temp gauge sender is as follows: In the "piccolo tube" where PN 1817 is previously installed, use a "tee" fitting with 3/8" NPT male threads on one end and 3/8" female threads on the other two ends. Install PN 1817 in one end of the tee and route the hoses to the expansion bottle as before. In the other port of the tee, install a 1/8" female to 3/8" NPT male adapter. Install the temp sender into the adapter.

ff. Aluminum coolant recovery bottle, as supplied by Enterprises. P/N 462800

gg. It is allowed to louver the right rear sidepod cover, or use oil cooler exhaust panel P/N 480505.

hh. Butler Head Restraint, Enterprises Part # 180267, may be used.

C.23. Mandatory Items

a. Radiator screen mesh with a one-fourth (1/4) inch minimum opening shall be fitted to serve the single function of protecting the radiator from rock and stone damage and shall be a minimum of one (1) inch from the radiator core.

b. Radiator baffle of aluminum, P/N 1380891, to close the gap between the body and the radiator shall be installed.

c. Front brake ducts are required. Four (4) inch diameter clothes dryer or similar ducting, extending from the openings in the side baffles to the brake area shall be used. The material shall be securely fastened to the upper or lower pan area with adequate ties or safety wire sufficient to secure it.

d. Battery post covers are per GCR Section 9.

e. Body opening modifications are absolutely forbidden.

f. Tallman Kit, #1380905, is required on all cars.

g. All engine mounts, brackets, hoses, harnesses, and systems (see RFSRII) must be installed as per the RFSRII.

h. The NACA duct must be installed in the location specified and perform no other function than it's designed purpose.

i. The heat shield (P/N 1610) must be the original, unmodified Roush part and be installed per the RFSRII.

j. The shifter assembly and all linkages must be installed as per the RFSRII. It is permissible to alter the length of the shift lever handle above it's upper pivot to tailor to driver preference. It is permissible to use the appropriate Torrington or Apex joint in place of the

original Borgeson joint at the specified installation location in the shift linkage.

k. Upper control arm reinforcement straps, PN R0208087, or updated replacement arms are required on all Spec Racers by 1/1/95.

l. A rain / brake light comprised of a single standard trailer oval lamp, 2-1/4 inches x 6-1/2 inches, with incandescent or LED illumination is required in the original roll hoop mounting location. No changes may be made to the original 3-pin connector on the wiring harness. The secondary filament of the brake light assembly shall be connected to a switch enabling use as a rain light.

m. Plastic surge tank shall be replaced with aluminum tank (Enterprises p/n 462800). Radiator cap (16 lbs., lever-operated relief) shall be added to aluminum surge tank. Aluminum catch can (Enterprises p/n 462801) required. A bleed tube from the thermostat housing to the surge tank shall be added. The water temperature sensor may be relocated to the surge tank." NOTE: These modifications are allowed, but not required, upon publication, but will be required 1/1/2002.

n. Alternator pulley (Enterprises p/n 902130) required.

o. It is required that all cars display the official sponsors of SCCA Enterprises decals and locations as specified by Enterprises.

NO MODIFICATIONS to any component are allowed except as authorized above.

SPEC RACER FORD SPECIFICATIONS
CHASSIS

A. Vehicle Weight: 1670 lbs., minimum with driver.

B. Front Springs: 262-279 lbs./in Enterprises P/N 280387 or previous Enterprises supplied part (ex. RO28037).

C. Rear Springs: 412-429 lbs./in Enterprises P/N 280390 or previous Enterprises supplied part (ex. RO280388 or RO280389).

D. Anti-roll bar diameter: .56 inches.

E. Wheels: Front: 5.5 x 13 inches; Rear: 7.0 x 13 inches.

F. Tires: Dry: Goodyear Eagle "Spec Racer Ford"; size 22" x 7" x 13", Model D2525. Wet: Goodyear Eagle "Spec Racer Ford"; size 22" x 7" x 13", Model D2524.

G. Brakes: Hawk Blue 9012 pads, Minimum Rotor Thickness 10.50 mm (0.4130 in.). Rubber caliper bushings may be replaced with bronze bushings P/N 1196185. Original caliper pistons may be replaced with vented caliper piston P/N 1196186

H. Shock Absorbers: Standard Koni shock, P/N 82X-2255-SPA1 with standard oil or Penske P/N 280396. The bump rubber provided with the shock shall be used in unmodified, stock condition. No Koni or alternate bump stop is permitted to be used with the Penske shock. Shortening the Penske shock bump rubber is allowed. All shock absorbers must be sealed by Enterprises. Prior to sealing, the shock absorbers will be rebuilt by Enterprises or its authorized rebuilder.

I. Ground Clearance: Minimum is 2.75 inches measured at the frame on the front and rear axle lines without driver.

J. Suspension linkage adjustments: No more than 9/16 inches of the threads showing on any spherical rod ends. This is a mandatory

requirement to ensure sufficient engagement of the threads in the adjustable linkages. It is not permissible to remove any jam nut on suspension links.

K. Negative camber shall not exceed 5 degrees front and rear.

ENGINES

A. Enterprises, Inc., and Roush Industries seals shall be intact in all locations. Two (2) each on cam cover, two (2) on the oil pan.

B. Cam timing: Marks shall line up.

C. Ports: No porting, polishing, etc..

D. EEC module is a Roush Spec Racer Ford specific part, sealed, P/N F0992012

E. Flywheel: Ford part #FOCZ-6375-A min. weight: 16lbs, 2oz
Clutch disc: Ford part #FICZ-7550-A
Pressure plate: Ford part #FOCZ-7563-A min. weight: 8 lbs.
Pulley: Ford part #FOCZ-6316-A

F. Spark plugs: ONLY Motorcraft AGSF 24 C or AGSF 34 C

G. Oil filter: ONLY Motorcraft FL-400 Series

H. Air Filter: ONLY Motorcraft #FA-1031

I. PCV Valve: Motorcraft #EV-147 or as supplied by Enterprises.

TRANSMISSION

A. Seals: Seals intact, Enterprises and Roush.

B. Gear Ratios:

	STD
1st	3.42 : 1
2nd	1.84 : 1
3rd	1.29 : 1
4th	.97 : 1
5th	.73 or .77: 1

Final Drive Ratio: 3.62 : 1 No limited Slip

BODYWORK

NOSE-ON CAR

Length at center: 62" +/- 1/2"
Width at front axle centerline: 64-1/2" +/- 1/2"

NOSE-OFF CAR

Height at axle centerline: Minimum 21-1/4" (measured with rigid straightedge across tops of fenders)

CENTER-ON CAR

Height from side pod floor to top of leading edge behind center of front tire: 19" +/- 1/4"

Cockpit opening length from firewall center behind seat to center top of opening lip: 37-3/4" +/- 1/4"

TAIL-ON CAR

Width at rear axle center: 66" +/- 1/2"
Length at center: 43-1/4" +/- 1/4"

TAIL-OFF CAR

Height to top of rear lip: 16 1/8" +/- 1/2"
Openings on rear panel:
Outer: 9-7/8" Maximum x 1" Maximum
Inner: 18-1/2" x 1" Maximum

D. SHELBY CAN-AM RACER CLASSED IN CSR

1. Definition
One design, fixed specifications, open cockpit, single seat sports racer.

2. Safety Requirements
Per GCR and SRCS minimums

3. Maintenance and Repairs
It is permitted to perform routine maintenance and repairs.

4. Chassis
NO MODIFICATIONS ALLOWED except as noted herein.

Painting/Plating. The chassis may be painted any color(s). Aluminum parts may be polished or anodized. Surface finishes such as plating may be applied for corrosion protection. Any chassis piece that is a closed assembly shall have a l/8" DIA hole drilled in a noncritical location to allow flushing of any entrapped plating fluids. Post plating bakeout of four (4) hours at a temperature of 375 degrees F., is recommended to prevent hydrogen embrittlement. A flat sheet metal panel may be stitch-welded to the frame beneath the seat and feet area. The maximum thickness allowed is eighteen (18) gauge (.049"). The width of the panel may not exceed the width of the frame. Each panel must have three (3) 1/4" inspection holes.

5. Bodywork
NO MODIFICATIONS ALLOWED

a. Bodywork crash-damage may be repaired, but exterior dimensions, shapes, thicknesses, and profiles shall remain unaltered. The addition of material to increase rigidity and/or the weight is prohibited. Body sections (complete) shall meet the following weight requirements.

Section	Minimum	Maximum
Front	33 lbs.	50 lbs.
Center	55 lbs.	96 lbs.
Rear	45 lbs.	64 lbs.

b. At-track repair of crash-damage that does not conform to the above specifications will be allowed if replacement parts are not immediately available. This waiver will be noted in the vehicle logbook and will be good for that ONE EVENT ONLY.

c. The car may be painted any color(s).

d. It will be required that all cars display the following:
   1. The SCCA field logo on the front and each side of the car.
   2. Class designation, CSR, per GCR Section 9.3 Identification Markings.
   3. Additional seven (7) inch high numbers are required on the outside of the wing end plates.

e. The forward roll bar braces shall be padded per GCR Section 9.4.

f. The rear lower corners of the fiberglass tail section may be cut off on an angle. The maximum that may be removed is four (4) inches high by sixteen (16) inches forward, measured from the rear corner. A reinforcing lip shall be installed on the inside of the panel.

6. Engine and Drivetrain

a. Engine

NO MODIFICATIONS ALLOWED except as noted herein.

This includes the fuel injection, induction, exhaust, cooling, electrical, and lubrication systems. All fluids are unrestricted. Engine maintenance which is permitted includes the replacement, but not modification, of external engine parts such as: spark plugs, oil filter, ignition parts, fuel pump, water pump, dry sump system, alternator/ water pump belt, hoses, valve cover, and oil pan gaskets. Exhaust system may be painted or plated. Oil filters may be replaced with an OEM equivalent. An alternate push-pull throttle cable, and necessary brackets are allowed.

b. Cooling

All coolers may be blocked off a maximum of fifty (50) percent to reach operating temperature.

c. Transmission

NO MODIFICATIONS ARE ALLOWED

Maintenance involving machine work of any type is not allowed, with the exception that welding repairs to broken cases are approved as long as the welding serves no other purpose. Internal transaxle work is strictly prohibited. This includes, but is not limited to, the replacement, modification, assembly, or disassembly, of internal transmission parts such as bearings, synchronizers, shifter mechanisms, etc.

Transaxle/drivetrain work which is permitted includes replacement, but not modification, of axles, CV joints, clutch disc, pressure plate, flywheel, throwout or pilot bearing, gear sets, or transaxle assembly.

7. Suspension

NO MODIFICATIONS ALLOWED except as noted herein.

a. Adjustments are permitted within the limits of the suspension components. (See Specifications)

b. Painting/Plating. Suspension parts may be painted any color(s). Aluminum parts may be polished or anodized. Surface finishes such as plating may be applied for corrosion protection. Any suspension piece that is a closed assembly shall have a l/8” DIA hole drilled in a noncritical location to allow flushing of any entrapped plating fluids. Post plating bakeout of four (4) hours at a temperature of 375 degrees F is recommended to prevent hydrogen embrittlement.

c. The uprights may be sleeved with a bushing in the ball post area for repair.

d. Anti-roll bar (swaybar) may be disconnected, but not removed.

e. Rod ends on lower rear control arms may be upgraded to a half (1/2) inch shanked rod end (P/N CS 1691). The rod end attaching bolt hole diameter must remain 7/16”.

8. Brakes

NO MODIFICATIONS ALLOWED except as noted herein.

9. Springs

NO MODIFICATIONS ALLOWED

Factory authorized parts only. (See specifications) Helper springs beneath the normal springs are allowed, but must compress completely when the car sits on its wheels without driver.

10. Steering

NO MODIFICATIONS ALLOWED

Steering arms may be reinforced and made out of steel or aluminum, providing the geometry remains the same as original.

11. Wheels
NO MODIFICATIONS ALLOWED

12. Fuel System
NO MODIFICATIONS ALLOWED except as noted herein.

A returnless fuel system may be used as an alternate. The following modifications must be made when using returnless system:

a. Fuel return line must be removed.

b. Fuel rail regulator must be removed and plugged.

c. Vacuum line to fuel rail regulator must be removed, and plugged at source.

d. Electrical connectors may be changed.

13. Electrical System
NO MODIFICATIONS ALLOWED

Battery shall remain in the same location. A battery of any size may be used.

14. Weight
The car shall weigh 1980 lbs., minimum, including the driver.

15. Vehicle Configuration
All Shelby CAN AM cars shall comply to GCR Section 9., with the following exceptions: 9.3 Accumulators.

16. Updates
Provisions will be made for updates on all safety and mechanical improvements. Such updates will be effective when announced by the SCCA National Office and published in FasTrack.

17. Vehicle Logbook
Per Section 9.2 of the GCR (Can-Am Logbooks are no longer valid and shall be replaced with SCCA Club Racing Logbooks)

18. Accessory Items

a. Use of cool suits by drivers is authorized providing the water tank is securely mounted and approved by Tech. The car shall meet minimum weight with driver, but without the water tank.

b. Two-way radios and video cameras may be installed in the car. All components shall be securely attached and approved by Tech inspection.

c. The seam between the splitter and the nose bodywork may be taped completely using duct tape. Duct tape may be used to repair crash damage, or as a precautionary means of securing the body retaining latches. Crash-damage is defined as having occurred during the current event, and the tape should be of an appropriate color if possible.

d. Recording tachometers are allowed.

e. Anti-skid material may be added to pedal surfaces and floor of car.

f. Alternate diameter steering wheel and/or quick disconnect steering wheel system is allowed as long as no other changes are made to facilitate installation.

g. Chassis run blocks: Size = 5” x 1-1/2” x 1/4”, material unre-

stricted, quantity eight (8) maximum.

h. Mirrors and their attachment/mounting position are unrestricted.

i. Seat modifications (for comfort and/or size) are allowed.

j. Fasteners (including body) are unrestricted except for size.

k. An oil pressure warning light may be installed.

l. Additional oil filter(s) are allowed, any brand, any location, except that only a screen type filter may be installed in the suction lines.

m. Additional body supports, such as a pad underneath the front corner on top of the crush box or a bracket on the side of the crush box is allowed.

n. A stone shield behind the front wheels may be added, and must be mounted vertically against the bodywork, behind the wheel. A stone shield may be added behind the radiator tank and on the bottom of the radiator at the fiberglass duct. (May not serve any other purposes.)

o. An extension on the floor pan of 6” x 40” as a stone guard/ belt protector may be added.

p. The dead pedal and throttle pedal brackets may be modified for driver comfort.

q. Additional gauges may be added.

r. The use of data acquisition systems is permitted.

s. A bleed fitting may be added to the thermostat housing.

t. Additional belt guards may be added. Additional fences on the pulleys are allowed. The only machining allowed to the pulley is for mounting the fences. Alternate pulley diameters, bearings, or other modifications are not allowed.

u. The plexiglass windscreen may be removed, but not modified.

v. A transmission filter may be added.

w. Liquid lines (oil, fuel, water) may be changed to metal braided lines.

x. Bosch fuel pump P/N GFP216 may be used in addition to or in place of the original fuel pump.

Shelby CAN AM Specifications

CHASSIS

A. Vehicle Weight: 1980 lbs., minimum with driver.

B. Springs: I.D.: 2.55, Free Length: 8.00

EIBACH P/N	WIRE DIA.
800-250-0400	11.50mm
800-250-0450	12.00mm
800-250-0500	12.25mm
800-250-0550	12.75mm
800-250-0600	13.00mm
800-250-0650	13.25mm
800-250-0700	13.50mm
800-250-0800	14.00mm
800-250-0900	14.50mm
800-250-1000	15.00mm

C. Anti-roll bar diameter: 1-1/4 x 0.065, 1-1/4 x 0.083, 1-1/4 x

0.095, 1-1/4 x 0.120

D. Wheels: Front: 11 x 16, Rear: 12 x 16

E. Tires: Shelby Can-Am cars may run any suitable tire that fits the specified wheels.

F. Brakes:
   1. Brake Pads: Unrestricted
   2. Rotors: 12.18 x 1.25 vented
   3. Calipers: 1.75 x 4 piston (JFZ or Wilwood)

G. Shock Absorbers: Unrestricted

H. Suspension Linkage Adjustments: No more than 9/16 inches of the threads showing on any spherical rod ends and all suspension fasteners. This is a mandatory requirement to ensure sufficient engagement of the threads in the adjustable linkages.

I. Master Cylinders: Brakes: 7/8" or 1"
   Clutch: 5/8"

ENGINES

A. Cam Specs: Checking Lift - .006"
   Maximum Valve Lift - .500"
   Lobe centerline - 104°
   Duration - 284°
   Int open - 38° BTDC
   Int close - 66° ABDC
   Exhaust open - 66° BBDC
   Exhaust closed - 38° ATDC

B. Cam Sprocket: Sprocket keyway and key in original configuration.

C. Ports: Intake manifold and/or cylinder head - shall meet templates and volume.

D. Flywheel: Minimum weight: 18 lbs, including ring gear, no machining.

E. Pressure Plate: Minimum weight is 10 lbs., no machining. Manufactured by LUK.

F. Clutch Disc: Minimum weight is 2.50 lbs. Manufactured by LUK.

G. Spark Plugs: Unrestricted

H. Fuel Pressure: (Idle)
   Return System: Minimum 42 PSI, Maximum 51 PSI
   (with vacuum disconnected)
   Returnless System: Minimum 45 PSI, Maximum 50 PSI

TRANSMISSION

A. Gear Ratios: 2.38:1, 2.08:1, 1.57:1, 1.29:1, 1.22:1, 1.15:1, 1.00:1
   Final Drive Ratio: 3.22:1, 3.05:1
   Bevel Gear Ratio : 1.16:1

E. OLDSMOBILE QUAD 4 CLASSED IN CSR

The only permitted engine is the Oldsmobile 2.3 liter Quad 4. The modifications or additions covered by these specifications establish limitations on engine preparation. Engine components not covered or addressed in these specifications may be freely modified or replaced.

1. A cast iron Oldsmobile Quad 4 2.3 liter production cylinder block shall be used.

2. The maximum piston diameter is 3.631" (.010" over standard).

3. Camshafts and direct acting lifter assemblies shall not be modified. Re-drilling of the dowel hole in the camshaft sprockets to attain the required camshaft timing is allowed. It is also allowed to add an offset bushing to this re-drilled hole to attain desired camshaft timing. Camshafts shall be one of the following:

   a. As manufactured and ground by Oldsmobile or by an after market cam manufacturer to Oldsmobile factory specifications for Vin.A (W41) or Mantapart #OP 1149.

Duration:	219 degrees @.050"
Intake Center Line:	101° to 104° ATDC
Exhaust Center Line:	112° to 115° BTDC
Max Intake Cam Lift:	.410"
Max Exhaust Cam Lift:	.410"
Intake and Exhaust Base Circle:	1.420"

   b. As manufactured and ground by Oldsmobile or by an after market cam manufacturer to Oldsmobile factory profile Vin. D or Mantapart #OP 1148.

Intake Center Line:	101° to 104° ATDC
Exhaust Center Line:	112° to 115° BTDC
Intake Cam Lift:	.375"
Exhaust Cam Lift:	.375"
Intake and Exhaust Base Circle:	1.420"

4. A standard, unmodified Oldsmobile Quad 4 2.3 liter crankshaft shall be used. Only machining necessary for balancing is permitted. Tuftriding, Parkerizing, shot peening, shot blasting, and polishing are permitted. Minimum weight is 41.0 lbs. (18.57 kg). An unmodified LGO crankshaft damper, Oldsmobile P/N 22545438, shall be used. The damper retaining bolt may be modified or replaced for an oil pump drive.

5. No carbon clutches are allowed. Clutches are otherwise unrestricted.

6. The maximum allowed compression ratio is 10.0:1.

7. Light machining of the head for purposes of clean up and casting flash removal is permitted. Reshaping of inlet or exhaust ports is prohibited. Addition of material in any form is prohibited. The maximum intake port volume is 128.0 cc. The maximum exhaust port volume is 83.5 cc. The distance between the valve centers and the angles of the valves shall not be altered.

8. Piston, pin and retainer assemblies shall weigh a minimum of 500 grams each.

9. Valves shall be of the following specifications:

Intake Valve Face Diameter:	36.37 - 36.63 mm
Exhaust Valve Face Diameter:	31.37 - 31.63 mm
Intake Valve Stem Diameter:	6.972 - 6.990 mm
Exhaust Valve Stem Diameter:	6.959 - 6.977 mm
Intake Valve Minimum Weight:	68 grams
Exhaust Valve Minimum Weight:	56 grams

10. Connecting rod assemblies shall weigh a minimum of 680 grams

each (including caps, nuts and bolts).

11. The only allowable intake manifold is the Oldsmobile Rocket manifold, part number 22551677. No modifications are permitted internally or externally. All unused vacuum ports shall be plugged with pipe plugs and a suitable sealer.

12. The throttle body may be bored to 60mm. The throttle body shall have vacuum ports plugged by removing pipes and installing pressed fit plugs with a suitable sealer. No un-metered air or fuel to the engine is allowed.

13. Balancing of reciprocating and rotating parts is permitted only by removal of metal.

F. ENTERPRISES SPORTS RACER PREPARATION RULES

1. Definition

One design, fixed specifications, open cockpit, single seat Sports Racer with Mazda 2.3 engine. Cars are packaged and sold by SCCA Enterprises, Inc. All replacement parts are supplied through SCCA Enterprises, Inc., and shall be official Enterprises Sports Racer parts except where noted in G.4.

2. Safety Requirements

Car will be delivered from the manufacturer with approved safety equipment. Replaced items shall be supplied through Enterprises, except safety harnesses may be replaced by any other that conforms to GCR Section 9.

3. Vehicle Configuration

All Enterprises Sports Racers shall comply to GCR section 9 with the following exceptions: Section 9.3 Accumulators.

4. Maintenance and Repairs

It is permitted to perform routine maintenance and repairs as long as existing parts are in no way modified and replacement parts are official Enterprises Sports Racer parts. If any official Enterprises' seal is broken, lost by accident or intent, the procedures outlined under G.18., shall be followed. Parts and materials with an Enterprises part number having the prefix "WM10" are considered to be unrestricted, providing their dimensions and materials are comparable. No other parts are to be considered "unrestricted" except where specified.

5. Chassis

NO MODIFICATIONS ALLOWED except as noted in these rules.

a. All cars shall use the stock, as delivered by Enterprises, wood floor of 6mm, with an allowable deviation of 3 mm across the surface for wear.

b. Seats are free. Panels inside the cockpit may be attached to the frame as long as the points of attachment are no closer than 6 inches apart. No welding or gluing of the seat to the structure of the car is allowed.

   Definition of cockpit is: area between the front roll hoop and rear roll hoop.

c. Painting or powder coating of the chassis is allowed.

d. Enterprises foot drop box part # WM180020 may be installed.

6. Bodywork

NO MODIFICATIONS ALLOWED (except as specified). If any seal, label, stamp is missing the parts must be returned to Enterprises for resealing.

a. Bodywork shall remain unmodified with the exception of holes for a slave or jumper battery plug, trackside beacon receiver, and tow hooks. All repair work must match original body dimensions and contours.

b. Bodywork fasteners are free.

c. The car may be painted any color(s), except primer.

d. It is required that all cars display the official sponsors of Enterprises decals and locations as specified by Enterprises.

e. Radiator screens are allowed and recommended.

f. All aerodynamic devices shall be used as delivered: i.e. wings, body winglets. No modification to mounting location or holes.

g. The rear wing and its related mounting components are to be used and mounted as delivered. Any modifications are strictly prohibited. The wing element may only be adjusted within the parameter of the wing adjusters as provided from Enterprises. No additional holes may be added. Different wing endplates may be used as long as the fit within the dimensions of 10 ¾ in wide and 11 in tall. A gurney flap or wicker may be use and may be no taller than ½ in

h. The stock headrest may be modified or replaced with any headrest meeting GCR section 9.4. The stock lateral bolsters may be modified or removed.

i. Enterprises windscreen P/N: WM137000 is allowed.

7. Engine and Drivetrain

a. Engine

1. NO MODIFICATIONS ARE ALLOWED EXCEPT WHERE SPECIFICALLY AUTHORIZED WITHIN THESE RULES. This includes all fuel injection and engine management components, including exhaust, cooling, electrical and lubrication systems. All systems are subject to test procedures and must conform to OEM specifications as stated and supplied by Enterprises. All fluids, except fuel, are unrestricted.

2. Enterprises, Inc., seals on the engine, and other components shall remain in place at all times. All engines shall be rebuilt, checked on an engine dynamometer, and sealed through Enterprises.

3. Engine maintenance, which is permitted, includes the replacement, but not modification of external engine and engine systems parts.

4. There are six (6) seals on the engine. Two (2) on the timing cover, two (2) on the top of the valve cover, and two (2) on the oil sump. They may not be removed or tampered with.

5. All rubber oil lines may be replaced with braided metal-covered (Aeroquip type) lines. Hose clamps may be installed on the rubber oil lines.

6. Intake manifold: No modifications are allowed. Absolutely no porting or the addition of material is allowed. No coating is allowed on the exterior or interior of the manifold.

7. Engine Control Unit (ECU): Manufactured by MBE and sealed

by Enterprises. Tampering of the ECU, ECU program, seal, wiring or sensors is prohibited.

8. The flywheel weight is a minimum of 2.6 lbs for the Enterprises supplied flywheel. No modifications to the flywheel with the exception of normal resurfacing for clutch wear are allowed.

9. No modification to the crankshaft dampener is allowed.

The following parts must be used:

10. Clutch: Enterprises supplied clutch and flywheel contained in kit #WM701000A, Piston # WM701004A, Throw out bearing # WM701006A, Small O-ring # WM1010405, Large o-ring #WM1010406, Flexplate and Ring Gear # WM1101053.

11. Spark Plugs, Part # NGK PTR5F-11, NGK ITR5F-13, or Motorcraft # AGSF32FEC.

12. Fuel Injectors: Part # WM591929

13. Throttle Body: Part # WM591930

14. Fuel Filter: Any 10 micron fuel filter may be used as long as it performs no other purpose than to filter fuel.

15. Air Filter: Part # WM301020

16. Exhaust systems may be thermal coated or wrapped.

17. A heat shield between the engine block and the exhaust system is recommended for the purpose of protecting hoses, shifter cable, and wiring from the heat of the exhaust.

18. An Enterprises muffler kit part # WM301046 is required. The muffler may not extend beyond the back of the transmission. An additional muffler may be added to accompany the stock muffler as needed to meet sound requirements.

19. An optional air to oil cooler is allowed. The maximum core size is 13 inches wide by 6.5 inches high. No water to oil heat exchanger is allowed.

20. An optional Enterprises alternator kit is allowed, Part # WM1100101.

b. Transmission

1. The 5 speed sequential transaxle supplied by Enterprises is the only permitted gearbox. The casting has to remain original. No internal or external modification (including lightening) other than normal racing repair.

2. The servicing, replacement and modification of internal components is permitted by the competitor. With the following exceptions:

   a. All components must be ferrous metal, except for bearing retainers and bearing cages.

   b. Components manufactured by alternate manufacturers are permitted. Replacement components must be direct replacements to the original components. Absolute minimum weights are listed below.

3. The rear cover plate may manufactured or remanufactured using aluminum.

4. Only the following gear ratios are permitted:

1st gear combination 12:29 Ratio number 2.41
2nd gear combination 15:28 1.86
3rd gear combination 16:24 1.50
4th gear combination 18:22 1.22
5th gear combination 24:26 1.08

5. Differential – Only final drive ratio allowed is 2.75. The differential must remain an open differential. No limited slip mechanism is allowed. Differential must work as supplied (no tightening of the differential to limit slip) Must be able to use existing components.

6. Polishing, shot peening, REM© Isotropic treatment, heat and cold treatments are allowed. No coatings or plating is allowed.

7. Shift cable is free, but shifting must remain cable operated.

8. Throttle cable is free, but must remain cable operated.

9. The shift actuator assembly must operate as supplied by Enterprises. It can be polished, shot peened, or have REM treatment, heat and cold treatments.

MINIMUM WEIGHTS OF THE FOLLOWING PARTS
Differential Housing (both parts including bearings) 7.4 lbs
Ring Gear 3.6 lbs
Pinion Shaft 4.0 lbs
1st gear 2.7 lbs
2nd gear 1.2 lbs
3rd gear 1.1 lbs
4th gear 1.1 lbs
5th gear 1.0 lbs

8. Suspension

a. NO MODIFICATIONS ALLOWED. Adjustments are permitted within the limits of the suspension and steering components. All rod ends shall be engaged at least 1.5 times the diameter of the end.

b. Front Springs: 600 lbs. ±25 lbs. Part # WM203008. Wire size shall measure .360" ±.005".

Rear Springs: 1000 lbs. ±25 lbs. Part # WM203009. Wire size shall measure .410" ± .005".

c. Competitors may use the entire travel of all suspension adjusted components as delivered. Alternate parts are not allowed.

d. All suspension parts shall have the SCCA code embedded (a label/ or an Enterprises stamp) in the part. If they do not it is required to return part to Enterprises for proper labeling.

e. Anti-roll bars (sway bars) may be disconnected, but not removed.
Anti roll bar sizes:
Front .875" OD ±.005"
Top Tee .750" x .135" wall, ±.005"
Top Tee Length: 7.5" maximum end to end
Rear lower stalk .615" Dia. ±.005"
Upper stalk .765" ±.005"
Arm length 5.470" shoulder to shoulder

Optional Front Sway Bar: Rotating blade style with or without cockpit adjustment. Minimum blade thickness 0.155" ±.005" Main Shaft diameter 0.590" ±.005", Length 6.006" ±.010". Cockpit adjustable full bar kit PN: WM1121008. Bar kit only (with set screw lock) PN: WM1121007

9. Shocks

a. NO MODIFICATIONS ALLOWED. 4 Bilstein Shocks, Part # WM203001 or 4 Penske shocks, Part # WM1180090. Same type on all 4 corners.

b. Only shims provided on the shocks are legal (no bump rubbers, packers or modification to shims)

c. Adjustments for the Bilstein will be at the perch and with pressure (if rebuilt). Adjustments for the Penske rebound or at the perch.

d. Bilstein shocks may be used in the original configuration or may be rebuilt. Both shock types can only be rebuilt by Enterprises or its authorized rebuilder.

e. All shock absorbers must be sealed by Enterprises or its authorized rebuilder.

10. Steering

NO MODIFICATIONS ALLOWED, except as described within these rules

a. An alternate steering wheel may be used. “Butterfly” style steering wheels are not allowed.

b. Upper steering shaft may be modified to accept an alternate steering wheel and/or hub (if applicable). It may also be modified to accommodate a larger driver.

11. Brakes

NO MODIFICATIONS ALLOWED, except as described within these rules. Only the AP 4 PISTON CALIPER BRAKE SYSTEM AS SUPPLIED WITH VENTED ROTORS as supplied by Enterprises shall be used

a. Brake pads as labeled and supplied from Enterprises.

b. Brake rotors are used as delivered, no drilling or lightening is allowed. Minimum Diameter is 10.450”. Part # WM801002x Left, Part # WM801003x Right. Min width is .600”

c. Master cylinders must be the Girling type.

Front master cylinder is.700” piston diameter, Part # WM802005

Rear master cylinder is .750” piston diameter, Part # WM802006

d. Calipers must be AP 4 piston. Part numbers are:
LF # WM802004 RF #WM802003
LR # WM802002 RR # WM802001

e. Brake lines are free (no plastic allowed).

f. An optional brake duct kit Part # WMxxxxxx is allowed.

12. Wheels (Only wheels supplied by Enterprises)

NO MODIFICATIONS or MACHINING ALLOWED Aluminum racing wheel supplied from Enterprises with SCCA logo. If logo is worn off, or wheels that have been painted or powder coated, wheels must be inspected by Enterprises or one of their designated Customer Service Representatives and logos replaced.

Front: 8 in X 13 in Part # WM 205001

Rear: 10 in X 13 in Part # WM205002

a. All wheel bearings shall be run with grease (not oil), no special coatings are allowed, and the bearing grease seal shall be intact. No ceramic wheel bearings are permitted.

b. Wheel spacers are not allowed.

13. Tires

Tires must run in sets of 4 as stated below:

Hoosier R45, R45A, or R45B (SCCA Labeled) Compound
Front: PN: 43270, 21.5 in X 8.0 in X13.0 in
Rear: PN: 43301, 22.0 in X10.0 in X 13.0 in

Hoosier Wet Compound
Front: PN: 44195, 21.5 in 7.5 in X 13.0 in
Rear: PN: 44217, 22.0 in 9.0 in X13.0 in

a. A competitor shall start the race on tires used in a qualifying session for the race as identified by markings made on the tires by a race official. It is the responsibility of the competitor to ensure that his or her tires are appropriately marked prior to (e.g. on the false grid), during, or immediately after (e.g. as the car leaves the track) a qualifying session.

b. For races with more than one qualifying session, a competitor shall start the race on any marked tires from any qualifying session for the race.

c. If a competitor chooses to start the race on any tires that were not used in a qualifying session for the race and not appropriately marked, the competitor shall forfeit his or her grid position and start from the back of the grid. This forfeiture of grid position shall not apply if all qualifying sessions for the race were run under rain or wet conditions.

d. A complete set of four (4) rain or wet track tires may be used at the competitor's discretion for any race. Rain tires may be in new or used condition and require no special marking if used as a complete set of four.

14. Electrical System

NO MODIFICATIONS ALLOWED, except as described within these rules.

a. Wiring harnesses must remain as delivered.

b. Battery may be replaced with a larger one as long it remains in the same location.

c. Battery wiring is free. Car must shut off when master switch is turned off.

d. Any instrumentation is allowed.

e. Data acquisition is allowed, no telemetry is allowed.

f. Any rain light and tail lights are allowed.

15. Weight

The car shall weigh 1350 lbs. minimum, including the driver.

a. Ballast must be placed between the front dash bulkhead and the front engine bulkhead. They shall be fastened securely to the floor with flat head 5/16 bolts, washers and nuts on both ends of the weight.

16. Updates

Provisions will be made for updates on all safety and mechanical improvements. Such updates will be effective when authorized by Enterprises, announced by the National Office, and published in FasTrack.

17. Vehicle Logbook

The Vehicle Logbook for each Enterprises Sports Racer remains the

property of Enterprises and will contain not only the record of technical inspections, but also the major maintenance performed and all transfers of ownership. The Vehicle Logbook number will be the same as the factory chassis number that is stamped on the name plate mounted on the fuel cell behind the driver's shoulders. When the vehicle is sold, traded, or scrapped, the logbook shall be sent to SCCA Enterprises, Inc.,. 14550 E. Easter Ave Suite 400 Centennial, Co. 80112. The logbook will them be reissued to the new owner. When the logbook has been filled, a new one shall be requested from SCCA Enterprises, Inc.

A FEE OF $200 WILL BE CHARGED FOR LOST LOGBOOKS.

The logbook shall be presented at scrutineering for each event entered. All Enterprises Sports Racers are subject to normal safety inspection. Additionally, scrutineers will check each official seal. A competitor may not be barred from competing at a specific event if a seal is broken, damaged, lost or part not properly labeled but the part may be considered suspect and will be treated as such and will be required to be sent back to Enterprises for inspection. If engine cam cover or oil pan seals are broken, damaged, or missing, the engine shall be removed and sent to Enterprises for testing and resealing. The competitor will bear all expenses at the competitor's cost prior to the next event.

18. Seals

Enterprises engine seals are required for all races. Any competitor who runs an event without all proper engine seals in the required locations shall have his engine removed and shipped to Enterprises for testing and sealing after that event. The competitor will be responsible for all cost incurred by this procedure regardless of the findings, and subject to penalty by the SOM if engine is found to be not as specified.

SCCA Enterprises, Inc., seals are required on all Sports Racer Engines.

Any counterfeit engine seal found by an authorized representative of SCCA, Inc., or SCCA Enterprises, Inc., shall immediately render that engine illegal for further use, without need of dyno testing or inspection. SCCA Enterprises, Inc., will not be under any obligation to bring an illegally sealed engine back to legal condition. Penalties shall include all of the following: 19.1., 19.2., 19.3., and 19.4.

19. Penalties (Specific to Enterprises Sports Racer)

If a competitor refuses to give his engine and/or unlabeled parts for testing per a request of the Chief Steward (GCR 5.12.2.C.), the following penalties will automatically be imposed:

a. Vehicle logbook will be impounded.

b. Disqualification from the event.

c. Suspension of SCCA competition privileges for thirty (30) days.

d. The car and drive train are suspended from competition until the unit(s) specified by the Chief Steward are replaced.

In a case where a competitor does comply with the Chief Steward's request to have an engine and/or parts inspected and the impounded unit(s) are found legal, the SCCA, will stand all the costs incurred for the testing, including shipping. Should the impounded unit(s) be found illegal, the following penalties will be imposed:

1. Disqualification from the event.

2. A fine of $250.00

3. $500.00 testing fee plus freight charges paid to Enterprises

4. Competition privileges will be suspended immediately, and the suspension will continue for a minimum of thirty (30) days after the date when all fines and costs are paid in full and the license is received by the Chairman SOM or the SCCA Topeka Office.

5. For a second illegal drive train offense, the competitor will be permanently disqualified from further Enterprises Sports Racer competition.

20. Enterprises Sports Racer Drive Train Protest

a. Protests shall be filed per the GCR.

b. Protestor will specify the drive train item suspected (i.e., transmission or engine). The teardown bond to remove the motor and transmission is in three (3) parts:

   1. Remove and replace motor and transmission - $400.00

      a. Will be done by an SCCA representative or other shop that is equipped for this type of work and will be paid directly.

   2. Ship motor to Enterprises and test - $500.00 plus freight and crating charges

      a. Enterprises will inspect the motor, (item 2), and will notify the Chairman SOM as soon as possible as to the results.

   3. Protest Fee: Regional - $25.00, National - $50.00.

c. Enterprises shall retain the evidence, and the SCCA shall retain the fee, (item 3), until the period for appeal has passed.

d. The Chairman SOM is required to inform Enterprises of the protest using the ESR Protest Information Form. A copy of the protest shall be sent to Enterprises.

   If the protest proves to be valid and any appeal fails, the protest fee, (item 3), will be returned to the protestor. Also, the protestee will be required to reimburse the protestor the remaining fees ($900).

   The protestee will not be allowed to compete again until all costs are paid. If found legal, the protester forfeits fee (items 1 and 2) above.

e. If found illegal, competition privileges will be suspended immediately, and the suspension will continue for thirty (30) days after all costs are paid in full.

f. For a second illegal drive train offense, the competitor will be permanently disqualified from competing in ESR competition.

21. Accessory Items

a. Mirrors are free.

b. Two-way radios may be installed in the car. All components shall be securely attached and approved by Tech inspection.

c. Racers tape may be used to repair crash damage, or as a precautionary means of securing the body retaining latches. Crash-damage is defined as having occurred during the current event, and the tape should be of an appropriate color if possible. Taping of body joints is not allowed

d. The spark plug wires may be fire sleeved and may be loomed, but must be original Mazda wire as supplied by Enterprises.

e. Engine compartment fluid hoses may be insulated using heat shield or wrap.

f. Front and rear tow hooks are required see GCR section 9.3 Towing Eyes.

G. ELAN VAN DIEMEN DP02 SPORTS RACER CLASSED IN CSR

1. Definition
A one design, fixed specification, open cockpit, single seat sports racer as supplied by Elan Motorsports Technologies (EMT).

2. No Modifications
No modifications are allowed to any part of the car as delivered by EMT except as permitted in these specifications. Adjustments of suspension components and air foils within the delivered range of adjustment is allowed. Maintenance, repair and painting are allowed. Instrumentation is free. Bodywork may be modified within the CSR rules (9.1.9.A.2.d).

3. Engines
The only engine allowed is the Ford 2.3 liter Duratec as supplied by Elan Power Products (EPP). No modifications are permitted. The engine must have the four (4) EPP numbered seals (cam cover, oil pan, front cover, crank angle sensor) present in their location and condition as installed by EPP.

4. Wheels and Tires
Thirteen (13) inch diameter wheels with a maximum rim width of 9 inches front and twelve (12) inches rear are the only wheel sizes permitted. Material is unrestricted providing it is metal.

5. Minimum weight
Minimum weight is 1350 lbs. The CRB may adjust the minimum weight at any time.

www.racelabz.com

SCCA CLUB RACING SPECIALISTS

Racing · Prep · Fabrication · Sales

RaceLabz has become a household name in the club racing world. From complete turn-key racecars and custom rollcage installations to suspension setup and driver coaching, **RaceLabz** is your source for championship winning performance. Stop wondering why, give us a call! Let us help you take your driving and vehicle's performance to the next level.

➤ Custom Rollcage Installation
- *Complete Custom Cage installations*
- *Custom seat location & fitted door bars*

➤ Track Support & Rentals
- *Trackside support*
- *Arrive & Drive racecar rentals*

➤ Vehicle Suspension Setup
- *4-Wheel Alignment & Corner weight*
- *Complete setup & development*
- *Dyno Services*

➤ Touring Class Racecars
- *Turnkey T1, T2 & T3 racecars*
- *New build, New safety equipment*

➤ Driver Coaching
- *Championship winning driver coaching*
- *Test Day ride along, Data, Analysis*

➤ Wholesale Cars & Parts
- *Salvage, Theft & Pre-Owned Cars*
  - *> Buy wholesale & Save $$$*
- *Wholesale OEM Factory Used Parts*
  - *> Hard to find Engines, Trans, etc*

Contact us today at: **570-655-7272 · info@RaceLabz.com**

A LIPPERINI COMPANY

INTRODUCTION TCS

These specifications are presented as an adjunct to your Factory Shop Manual. They are not meant to supersede the information that is in your manual that legitimately applies to your make, model, and year of car, with the exception of the following items. TIRE SIZES, RIM WIDTHS, SPRINGS, SWAY BAR(S), AND PERFORMANCE EQUIPMENT. In the case of the foregoing exceptions, the TCS will have priority. Voids or mistakes that may occur in the TCS do not allow you to change your vehicle to conform to the TCS.

These specifications reflect the best information available at the time of publication. Any error found in this edition will be updated when reliable specifications are available from the factory/factory distributor or other sources recognized by SCCA, Inc.

A model is defined as a unique car configuration which can be identified by means of decoding the Vehicle Identification Number.

9.1.10. TOURING CATEGORY

These Specifications are part of the SCCA General Competition Rules (GCR), and all classified automobiles shall conform with the requirements of GCR Section 9 unless this Category is specifically exempted from said requirements.

A. Purpose

Touring Category Classes are intended to provide the Membership with the opportunity to compete in commonly-available, recently-produced automobiles in as near the legal, street-driven form of those automobiles as is practically and safely possible under racing circumstances.

B. Intent

Touring Category automobiles shall, at all times, be in compliance with the specifications contained within their factory Shop/Service Manual(s) except as modified by these rules. Factory Shop/Service Manuals may come in the form of printed material, microfiche, CDs, DVDs and/or Internet access to manufacturer sponsored web-based databases. It is the responsibility of the competitor to provide the electronic device capable of accessing the data for compliance verification.

1. The competitiveness of any car in any Class shall not be guaranteed, nor shall the continued recognition of any car in any Class. Eligibility of cars may be discontinued at any time and for any reason, other than that of competitive stature.

C. Specifications

The SCCA shall publish Touring Category Specifications (TCS), containing the basic officially recognized specifications for each car eligible to compete in the Category during the calendar year.

1. To supplement those Specifications, competitors in the Touring Category shall be required to have in their possession a factory Shop/Service manual or its equivalent (See TCS section 9.1.10.B) for the specific make, model and year of the automobile entered. This manual or its equivalent will assist in determining the originality and configuration of the automobile, and shall be presented at Technical Inspection for every event and when otherwise so officially requested. If the factory Shop/Service manual is not available, then the competitor shall have a copy of the official SCCA Vehicle Technical Sheet (VTS) with them at every event and shall present it for reference when officially requested.

2. The proof of legality or illegality shall rest upon the protestor and/or protestee.

3. The Club Racing Board may classify any particular model of a car, and may permit specific factory options for that car. Such options shall be listed on the Specification Line for that vehicle. No unlisted models or factory options are eligible. If no specific model or options are listed on said line, the classified car shall be the base model with no options. Converting a car delivered with an automatic transmission to a manual transmission is allowed as long as all components which differ, including, but not limited to, radiator, springs, engine management systems, final drive ratio, etc., are converted to manual transmission specification.

   a. Only those cars listed each year are eligible to compete. Additions and/or deletions of automobiles shall be at the discretion of the SCCA.

   b. "Special Performance" specifications from the manufacturer which go beyond those listed in the Touring Specifications book will not be considered valid. Any manufacturer determined to be supplying false specifications to competitors or to the SCCA may be advised that said specifications may be withdrawn or the eligibility of the car(s) involved shall be terminated. The Club Racing Board is authorized to implement these terminations on an immediate basis without the approval of the Board of Directors.

   c. In the case of service circulars, recalls, etc., the burden of proof of validity shall be upon the competitor.

4. To maintain the stock basis of Touring, updating and/or backdating of components is only permitted within cars of the same make and model as listed on a single Touring Specification Line. Interchanging of parts between engines of varying displacements is prohibited.

   a. The Club may permit substitution/replacement of certain components or modification of some assemblies on Touring Category automobiles. To assist in equating competition potential, not all automobiles may be permitted some or all of these allowed substitutions and/or modifications. Any such permissions shall be listed on the Specification line for each vehicle.

   b. Cars will be eligible for competition from the time they are classified until the end of the tenth calendar year of competition of the latest model year listed on the specification line.

5. The Vehicle Identification Number (VIN) shall correspond with the automobile classified and the automobile presented for competition. VIN stampings and/or plates shall remain in place.

   a. A car may be entered in competition if there are a minimum of two (2) VIN stampings and/or plates that correspond with the model of automobile classified.

   b. The tenth (10) position letter of the VIN determines the model year of the car ("W" = 1998, "X" = 1999, "Y" = 2000, "1" = 2001, "2" = 2002, "3" = 2003, etc.).

6. In order to equate competition potential, the Club may specify a competition weight for the vehicle. Additionally, and to this same end, it may direct that a specific amount of ballast be mounted in the vehicle in a specific location. Refer to Section E.2. of these Rules for additional details.

7. When alternate parts are approved for competitor use, the requesting party must first provide proof that sufficient quantities of the parts are readily available through commercial channels. The kit must be submitted to SCCA Club Racing Technical Services for inspection, and the kit may be returned to the sender.

D. Modifications (Configuration)

The following items represent the only modifications and safety items permitted and/or required on Touring Category automobiles. No permitted component or authorized modification shall additionally perform a prohibited function.

1. Engine

a. Component Modification

1. Overhaul procedures which in the slightest way could increase performance beyond factory specifications shall not be utilized, e.g. porting/polishing, etc.
2. Blueprinting and balancing is allowed.
3. No engine component(s) shall be modified in any manner that is not specifically permitted or authorized by the Factory Service Manual or legitimate Factory Technical Bulletins.
4. “Special Performance” specifications from the manufacturer which go beyond those listed in the TCS book shall not be considered valid.

b. Induction System

1. Air Filter(s) elements (only) may be substituted.

c. Fuel System

1. All fuel system components, settings, and specifications shall be as specified by the manufacturer. Fuel filters may be substituted with other fuel filters of equivalent OEM specifications.
2. Only the fuel type specified by the Owner’s and/or Factory Service Manual may be used. Refer to GCR Section 9.3 Fuel, for permitted fuel specifications.
3. The stock fuel tank may be replaced with a fuel cell that is designed to mount in the OEM fuel tank location or is specifically designed to mount in the spare tire well provided that it is not necessary to modify any bodywork to accomplish the installation other than for the purposes of fastening the cell securely in place.

d. Camshaft and Valve Gear

1. All valve sizes, seat dimensions, and angles, etc., shall be in conformance with those specifications and procedures outlined in the Factory Service manual.

e. Block

1. Cylinder bore dimensions shall remain as originally specified by the Factory Service Manual. No “oversize” bores shall be permitted.

f. Oiling System

1. Engine oil may be substituted with other oil of equivalent OEM specifications. Oil additives are unrestricted.
2. Engine oil filter may be substituted with any unit meeting OEM specifications.

3. An oil catch can is permitted.

4. Any oil cooler(s) is permitted.

g. Ignition/Starter/Electrical System

1. Spark plugs may be substituted.

2. The use of resistor or non-resistor-type plugs is permitted.

3. Batteries may be replaced with those of an alternate manufacturer, provided they are of similar amp-hour capacity, size, and weight.

h. Exhaust System

1. All cars classified in Touring may replace the catalytic converter(s) with a pipe that has the same diameter inlet and outlet as the converter it is replacing. The post catalytic converter oxygen sensor may be disabled, replaced, or removed; the resulting hole (if present) may be plugged. All Touring cars may replace any part of the exhaust system beyond the catalytic converter(s), provided:

   a. Said replacement system retains the original configuration, e.g., single or dual, etc.

   b. The system exits from beneath the body in the same approximate location(s) as the original system. When a factory (OEM) single exhaust system is cosmetically split into dual outlets, it is permitted to continue as a single system provided it exits in approximately the same location as one of the originals.

   c. The system meets all appropriate event-specific sound level requirements.

i. Other Engine Components

1. Fluid hoses, their appropriate clamps, and belts (fan, alternator, etc.) may be substituted. Related clamps and hardware are unrestricted.

2. The engine management computer or ECU may be altered, but not replaced. All modifications shall be done within the original housing. The car may meet federal emission standards, but shall provide OBD II compliant data to the data link connector.

3. Cosmetic engine covers made of plastic may be removed.

4. Any power steering cooler(s) is permitted.

2. Engine, Rotary Piston

a. All permissions and restrictions in Sections D.1.a. - m. apply.

3. Cooling System

a. Radiator(s)

1. A radiator screen of one-fourth (¼) inch minimum mesh may be added in front of the radiator. If added, it shall be contained entirely within the bodywork of the vehicle.

2. Any radiator is permitted, provided it mounts in the original location, maintains the same plane as the original core, and requires no body or structural modifications to install. No new openings created by fitting an alternate radiator may be used to duct air to the engine.

b. Air Conditioners:

1. The factory and/or aftermarket air conditioning system may be removed, provided that at least the following items associated with the system are also removed: compressor, condenser, H.D. springs/sway bars, H.D. shocks, larger tires, engine and transmission coolers and cooling fans. All duct work, wiring, Freon lines, valves, evaporators, dryers, and dash controls may remain. If the air conditioning compressor is an integral part of the drive system, the compressor may be retained and disabled *or replaced with an idler pulley that serves no other purpose*.

2. Items that serve a dual purpose, such as an alternator/air conditioning compressor bracket, etc., may not be substituted.

3. The gaps around the radiator that are created by the removal of the air conditioning condenser and related items may be sealed with foam.

4. Transmission/Final Drive

a. Transmission

1. Transmission lubricant may be substituted. Transmission lubricant additives are unrestricted.

2. An oili catch can is permitted.

3. Any transmission cooler(s) is permitted.

b. Final Drive

1. Unless otherwise so noted on the Vehicle's Specification Line, the differential ratio shall be as delivered as standard equipment by the manufacturer.

2. All legitimately classified cars in Touring Class are permitted a limited-slip differential (Quaiffe, Torsen, etc.). Locked differentials are not allowed.

3. Final Drive lubricant may be substituted. Final Drive lubricant additives are unrestricted.

4. An oili catch can is permitted.

5. Suspension

a. Suspension Components

1. Adjustment is permitted with a maximum negative camber of *3 degrees*.

b. Springs, Anti-Roll bar(s), and Shock Absorbers

1. Springs and anti-roll bar(s), shall remain as manufactured unless an alternate is listed on the vehicle specification line. Cars where air conditioning units have been removed shall refer additionally to Section D.3.b.1., above, for additional spring requirements.

2. The make of shock absorber may be changed. Their number, perch location(s), system of attachment, and attachment points shall not be altered. Their type (tube vs. lever, etc.) shall not be altered. The interchange of gas and hydraulic shock absorbers is permitted.

   a. The mounting hardware utilized shall be of the original type.

   b. The use of any shock absorber bushing material is permitted. Note: the bushing attaching the end of the

strut to the body or frame on a strut-type suspension system is considered a suspension bushing, not a shock absorber bushing.

c. The placement of the spring shall remain as stock. The distance between the lower mounting bolt, or other system of attachment, to the bottom of the spring as it sits on the perch shall be the same as stock.

d. Suspension geometry and range of travel shall not be altered.

6. Brakes

a. Components

1. The make and material of brake pads and linings may be changed.

2. Brake fluid may be substituted with any brake fluid.

3. Brake rotor dust shields may be removed.

4. Flexible rubber brake lines may be replaced with Teflon lined, metal braided hoses.

5. *Any brake ducts are permitted, but they must serve no other purpose and must mount without modification to other components, but front parking light assemblies may be removed to provide an opening for the ducts. The ducting must not be visible from outside the car.*

6. Stock replacement brake rotors may be obtained from sources other than the manufacturer provided they are the exact equivalent of the stock rotors.

7. Wheels and Tires

a. Wheels

1. Any type wheel suitable for competition may be used, provided:

a. Any wheel not exceeding the specified diameter and rim width on the vehicle's specification line may be used.

b. Wheels are permitted any offset provided the tire tread (that portion of the tire that contacts the ground) does not protrude beyond the fender opening when viewed from the top perpendicular to the ground, unless specified differently on the individual spec line for that car. To determine compliance the vehicle should be rolled through a powdered substance, as raced with driver, in order to indicate the tire tread contact patch under static conditions.

c. Cars equipped with lug bolts may convert to wheel studs and lug nuts.

d. Wheel studs may be replaced with longer studs as necessary to fit optional wheels. Wheel spacers may be used for purposes of adjusting track.

2. Hub caps and wheel trim rings shall be removed from all wheels.

b. Tires

Unless otherwise so noted on a vehicle's TCS line, all cars shall run

the tire size as listed for the vehicle in the TCS or an authorized replacement size. When authorized replacement tires are used, the same size tire shall be used on each axle (front tires need not be the same size as rear tires).

Tires must conform to 9.3.45. All tires shall be offered for sale over the counter through the manufacturer's tire dealer network. The brand of tire and tire pressures are unrestricted.

All cars shall run tires with a minimum of a "U" speed rating. For size determination, the molded section shall be used. All cars are allowed a section increase or decrease of 10mm or 20mm (e.g., 195 may use 175, 185, 195, 205 or 215). All cars are allowed an aspect ratio increase or decrease of 5 or 10 (e.g., 55 may use 45, 50, 60 or 65).

8. Body/Structure

a. Configuration/Modifications

1. Component Alignment: All body components shall maintain their original relationships. Gaps or openings shall not be increased, decreased, or eliminated through realignment of components. Normally occurring gaps or seams shall not be taped over.

2. Door Glass
   a. All cars shall run with both front door windows fully open (down).

3. Spoilers (Wings)
   a. Only original equipment front spoilers, dams, and rear spoilers and wings shall be permitted unless specified on the vehicle specification line.

4. Other Body Components
   a. Sunroofs, Targa tops, and T-tops are only permitted if installed by the manufacturer of the vehicle. If installed they must be retained on the vehicle, run in the closed position, and securely bolted in place unless the operating rails adequately secure the panel. Glass panels are permitted.

      Hardtops: If a hardtop is required, it shall be the original equipment hardtop from the vehicle manufacturer unless an alternate part number or manufactrer is listed on the vehicle spec line.

   b. Hatchback "privacy covers" shall be completely removed.

b. Appearance

1. Cars may be painted any color(s). Markings and numbers may be painted.

2. Vehicles shall be neat and clean, and shall not be dirty externally or in the engine or passenger compartments. They shall not show bodywork damage, and shall not be presented for competition totally or partially in primer. Cars that do not bear the prescribed identification marks, Club Racing logos, and numbers in conformance with GCR Section 9.3 Identification Markings, shall not be approved for competition.

9. Driver (Passenger) Compartment (Trunk)

a. Seating

1. The driver's seat (only) shall be replaced with a one-piece bucket-type race seat. Factory seat tracks/brackets may be modified, reinforced, and/or removed to facilitate replacement mountings provided they perform no other function. All other seats may be removed.

2. Rear heating/air conditioning ducts which are located under the driver's seat may be removed or modified to facilitate seat installation.

b. Steering Wheel

1. Aftermarket steering wheels, and their required mounting modifications, are permitted.

c. Gauges and Accessories

1. Water temperature, oil temperature, oil pressure, and boost/vacuum gauges are permitted and shall be securely mounted, and shall perform no other function other than their primary use.

2. Interior mirror(s) may be replaced with a multi-panel type mirror, but no such mirror shall extend beyond the confines of the interior of the vehicle.

3. Two-way radios may be used.

4. Hand controls are permitted in those instances where the driver can demonstrate the physical need for them.

5. Data Acquisition Systems
   Stand alone data acquisition systems are allowed to be in use in the car during practice, qualifying and race events. These devices may be connected to the data link connector in the car to extract available data. This must be a one-way out connection and no calibrating or alteration of the PCM is to be done while the car is in motion and the system in place.

d. Interior Modifications

1. Front passenger seat, rear seat back, rear seat bottom cushion(s), sun visors, seat belts and their attaching hard¬ware and bracketry may be removed. In any automobile where allowed removal of rear seats, upholstery, etc., creates an opening between the driver/passenger compartment and an exposed gas tank, fuel cell, or part thereof, a metal bulkhead which completely fills such opening shall be installed (See GCR 9.3 Fuel Cell Specifications).

2. Carpets, carpet padding, center consoles, floor mats, headliners, sun roof liner and frame, dome lights, grab handles, and their insulating, attaching or operating mechanisms may be removed.

3. Any removable covers used to cover spare tires, tools, bins, etc., may be removed along with attaching hardware and bracketry.

4. Removal of radio and speaker components is permitted.

5. All other interior trim panels, except the dashboard, may be removed. Other than to provide for the installation of required safety equipment or other authorized modifications, no other driver/passenger compartment alterations or gutting are permitted.

6. Removal of radio and speaker components is permitted.

10. Safety

a. Steering Column (Locks)

1. Steering column locks may be removed or disabled.

b. Safety Harness

1. All cars shall be equipped with a driver's restraint system meeting the specifications of GCR Section 9.3 Driver's Restraint System.
2. All cars shall have a driver's side window safety net complying with GCR Section 9.3 Window Safety Nets shall be mounted in such a manner as to provide protection in the event the driver's door opens.
3. In those cars where a window safety net cannot be installed, arm restraints shall be used. Arm restraints are not an acceptable substitute for window nets in any other type of car.

c. Fire Systems (Extinguishers)

All cars shall have, as a minimum, a fire extinguisher meeting the specifications of GCR Section 9.3 Fire System. Touring Category automobiles may be equipped with a fire system meeting the specifications of GCR Section 9.3 Fire System.

d. Passive Restraint Systems

Passive restraint systems shall be deactivated. Air bag systems shall be deactivated and may be removed. If the car is to be used on public roads, we recommend that these items be reactivated/rearmed/replaced when not in competition.

If so equipped, the rolling door lock mechanism may be deactivated by unplugging the components.

e. Towing Eyes

Towing eyes per GCR Section 9.3 Towing Eyes, shall be fitted.

f. Electrical Master Switch

An electrical master switch may be installed.

E. Car Classification

These classifications shall be reviewed on an annual basis, and shall be effective as of January 1. Once these classifications have been officially published, no changes or additions shall be made after March 1 of the calendar year.

Touring Category Classes are as follows: T1, T2, T3, and ST.

1. Weight
   a. The weight, as listed on an automobile's Specification Line, shall be with driver and required ballast. Refer to GCR Section 9.3 Weight. If a cool suit system is utilized, it shall be weighed with the car as it came off the track.
2. Ballast
   a. Some vehicles may be required to carry specific amounts of ballast. If such ballast is specified for an automobile, in addition to the requirements of GCR Section 9.3 Ballast, the following requirements shall also be met:
      1. All specified ballast shall be securely mounted in the passenger footwell of the vehicle, aft of the firewall and any footwell angle, and forward of the passenger seat

unless otherwise so permitted on the vehicle's TC Specification Line.

2. It shall be in segments no lighter than ten (10) pounds and no heavier than fifty (50) pounds, and shall be capable of being weighed apart from the vehicle.
3. Each segment shall be fastened with a minimum of two (2) one-half (1/2) inch bolts and positive lock nuts of SAE Grade 5 or better, and shall utilize large-diameter, load-distributing washers.
4. Holes may be drilled in the passenger footwell floorpan for purposes of mounting the ballast (only), and said floorpan may be reinforced as required for the same purpose.

Notes:

T1	Bore x Stroke(mm)/ Displ. (cc)	Wheel-base (mm)	*Max Wheel Size (inch)*	Tire Size	Gear Ratios	Final Drive	Brakes (mm)	Weight (lbs)	Notes:
BMW E92 M3 (08-09) *BMW M3 GTS (2010)*	92.0 x 75.2 3999	2761	F:18x8.5 R:18x9.5	265/40	4.05, 2.40, 1.58, 1.19, 1.00, 0.87	3.85	F:360x30 R:350x24	3300	
Chevrolet Camaro SS (98-02)	99.0 x 92.0 5666	2568	17 x 9 (F & R) 16x10(F) 16x11(R)	275/40/17	2.66, 1.78, 1.30, 1.00, 0.74, 0.50	3.42	(F) 300 Vented Disc (R) 302 Vented Disc	3280	35mm front swaybar & 31mm rear sway bar is permitted. Factory optional oil cooler (P/N 52452158) and associated plumbing parts are permitted. Springs: (F) 550 lb/in (P/N TBD), (R) 130 lb/in (P/N TBD)
Chevrolet Corvette C-5 Incl. Fxd Cpe (98-04) Z06 (hardtop) (01-04)	99.0 x 92.0 5666	2655	*18x10 (F) 18x11 (R)*	*315/35/18 (max) (F&R)* Rear tires may protrude up to 1.0" with GM T1 Perf. Susp. pkg. Max. camber: (F) -3.5 (R) -2.5 with GM suspension pkg.	(C5): 2.66, 1.78, 1.30, 1.00, 0.74, 0.50 (Z06): 2.97, 2.07, 1.43, 1.00, 0.84, 0.56	3.42	(F) 325 Vented Disc (R) 305 Vented Disc; may use two-piece steel rotors with aluminum hats up to 5% larger than 325/305; any four piston caliper with 18 x10in front wheels at a 50 pound weight increase. Any brake caliper pistons are allowed; may use the Wilwood SL6R brake caliper at no penalty.	3180	GM Motorsports T1 suspension pkg. (Part # 12480062) is permitted. GM Motorsports transmission cooler kit (Part # 12480080) is permitted for transmission and differential housing. GM Motorsports Oil Cooler & Reservoir Kit (Part # 12480120) is permitted. Parts for Z06 upgrade: LS6 Engine Assy.: P/N 88894057, Engine components if using LS1 block: LS6 cylinder head: P/N 12560801, LS6 intake manifold: P/N 88890524 or 12480075, LS6 camshaft: P/N 12560950, LS6 valve springs: P/N 12565117, LS6 valve shims: P/N 12565118, Lifter valley cover: P/N 12568002, PCM: P/N 12200411, LH Exh manifold: P/N 12561255, RH Exh manifold: P/N 12561256. Factory optional oil cooler (P/N 52452158) and associated plumbing parts are permitted. C-5 exhaust system may be modified to mate to Z06 exhaust manifolds. Radiator from Doug Rippie Motorsports P/N 30-695 is permitted. Cage attachments points may be on the frame. Floor may be modified to facilitate installation of cage mounting plates. Wrapping of tie-rod ends to shield heat is permitted. This max. tire supersedes TCS 9.1.10.D.7.b. C6 calipers permitted. Alternate wheel bearings SKF Part # BAR 5049C permitted. *OEM or equivalent carbon fiber hood is allowed. The stock exhaust manifolds may be replaced with any headers that connect to the catalytic converters or to the converter replacement pipes allowed in 9.1.10.D.1.h without other modification to the exhaust system. The header may replace the catalytic converter replacement pipes. Entire parking brake assembly (including interior lever) may be removed. The A.I.R air pump system may be removed.*

T1	Bore x Stroke(mm)/ Displ. (cc)	Wheel-base (mm)	*Max Wheel Size (inch)*	Tire Size	Gear Ratios	Final Drive	Brakes (mm)	Weight (lbs)	Notes:
Chevrolet Corvette C6 Coupe/ *Grand Sport (2010)* (05-*10*)	101.68 x 92.0 5967 (LS2) 103.26 x 92.0 6162 (LS3)	2685	18 x 10 (F) 19 x 11 (R)	245/40 (F) 285/35 (R) or 315/35 max. (F&R) Rear tires may protrude up to 1.0" with GM T1 Perf. Susp. pkg. Max. cam¬ber: (F) -3.5 (R) -2.5 with GM suspension pkg.	2.66, 1.78, 1.30, 1.00, 0.74, 0.50, or 2.97, 2.07, 1.43, 1.00, 0.71, 0.57	3.42	(F) 325 / 340 Vented Disc (R) 305 / 330 Vented Disc May use two-piece steel rotors with aluminum hats up to 5% larger than Z51 rotor size; may use Grand Sport brake package. Any brake caliper pistons are allowed; may use any four piston brake caliper at a 50 pound weight increase. *Z06 brake calipers allowed.*	LS2: 3280 LS3: 3450	C6 T1 Suspension kit and Z51 option allowed. Floor may be modified to facilitate installation of cage mounting plates. This max. tire supersedes TCS 9.1.10.D.7.b. Removable roof panel shall be installed. The following parts are allowed: GM oil pan #12630477, GM power steering cooler # 15925777, GM radiator # 25999103, GM radiator baffle # 25953429 (LS3 only), GM engine oil coolers (2) #15803358, Ron Davis Radiator, part #1-16CV0500, Fan shroud Phoenix part # 1005422, Canton Accusump part # CA24006 or # CA24024, along with Electric solenoid W/ epc # CA24273, Accusump Check Valve # CA2428, and Wheel to Wheel Adapter block # 0760-50001, and related hoses and mounting brackets, GM trans. cooler part # 12480080 and B&M differential cooler part #70298, 180 degree thermostat Hypertech # 1015 Lingenfelter Performance Engineering #L310055204 thermostat (LS2 only), Earls oil cooler part # 619 Setrab (19 row), HD oil pressure shim Phoenix part # 1005421, Wrapping of tie-rod ends to shield heat is permitted. Trimming of the lower edge of the center of the air dam is allowed up to a depth of 3.9 cm. ARE dry sump system part #3021 S permitted. ARE dry sump system part numbers 3021-S. The following parts are approved: mount w/tensioner & spacer #3020YM, serpentine belt #4032S, pulley #4SERP, oil tank #7030, tank bracket #7000, breather catch can # 7100, filter adapter #4010, damper assembly #8005. The oil tank shall be installed in the current battery location and the battery must be relocated to the same location as the 08 Corvette Z06. GM battery mounting bracket and hardware must be used. Alternate wheel bearings SKF Part # BAR 5049C permitted. C6 LS2 may upgrade to the Grand Sport brakes with no weight penalty. *Entire parking brake assembly (including interior lever) may be removed.*

T1	Bore x Stroke(mm)/ Displ. (cc)	Wheel-base (mm)	*Max Wheel Size (inch)*	Tire Size	Gear Ratios	Final Drive	Brakes (mm)	Weight (lbs)	Notes:
Chevrolet Corvette Grand Sport (2010)	103.26 x 92.0 6162 (LS3)	2685	18 x 11 (F) 19 x 13 (R)	*315/35 max (F) 345/35 max (R)* Rear tires may protrude up to 1.0" with GM T1 Perf. Susp. pkg. Max. cam¬ber: (F) -3.5 (R) -2.5 with GM suspension pkg.	2.97, 2.07, 1.43, 1.00, 0.71, 0.57	3.42	(F) 355 x 32 Vented Disc (R) 340 x 26 Vented Disc May use two-piece steel rotors with aluminum hats up to 5% larger than Z51 rotor size. Add to Notes: Any brake caliper pistons are allowed; may use any four piston brake caliper at a 50 pound weight increase.	3500	C6 T1 Suspension kit and Z51 option allowed. Floor may be modified to facilitate installation of cage mounting plates. This max. tire supersedes TCS 9.1.10.D.7.b. Removable roof panel shall be installed. The following parts are allowed: GM oil pan #12630477, GM power steering cooler # 15925777, GM radiator # 25999103, GM radiator baffle # 25953429 (LS3 only), GM engine oil coolers (2) #15803358, Ron Davis Radiator, part #1-16CV0500, Fan shroud Phoenix part # 1005422, Canton Accusump part # CA24006 or # CA24024, along with Electric solenoid W/ epc # CA24273, Accusump Check Valve # CA2428, and Wheel to Wheel Adapter block # 0760-50001, and related hoses and mounting brackets, GM trans. cooler part # 12480080 and B&M differential cooler part #70298, 180 degree thermostat Hypertech # 1015 Lingenfelter Performance Engineering #L310055204 thermostat (LS2 only), Earls oil cooler part # 619 Setrab (19 row), HD oil pressure shim Phoenix part # 1005421, Wrapping of tie-rod ends to shield heat is permitted. Trimming of the lower edge of the center of the air dam is allowed up to a depth of 3.9 cm. ARE dry sump system part #3021 S permitted. ARE dry sump system part numbers 3021-S. The following parts are approved: mount w/tensioner & spacer #3020YM, serpentine belt #4032S, pulley #4SERP, oil tank #7030, tank bracket #7000, breather catch can # 7100, filter adapter #4010, damper assembly #8005. The oil tank shall be installed in the current battery location and the battery must be relocated to the same location as the 08 Corvette Z06. GM battery mounting bracket and hardware must be used. Alternate wheel bearings SKF Part # BAR 5049C permitted. *Entire parking brake assembly (including interior lever) may be removed.*
Dodge Viper RT-10/ RT-10 ACR & GT-S / GT-S ACR (96-02)	101.6 x 98.5 7990	2444	18x10 (F) 18x13 (R)	(F) 275/40 (F) 315/35 (max) (R) 335/35	2.66, 1.78, 1.30, 1.00, 0.74, 0.50	3.07	(F&R) 330 Disc	3460	Differential Cooler Kit (Part # P5007010), Alternate Oil Pan (Part # P5007009), Throttle restrictor between each each throttle body and plenum is mandatory: 0.060" flat steel plate with one 55.0mm hole. This max. tire supersedes TCS 9.1.10.D.7.b. Alternate radiator Parts Rack part #RDR1 or Roe Racing #SKU102-205 allowed. May update to 03-06 Viper brakes. *Entire parking brake assembly (including interior lever) may be removed.*

T1	Bore x Stroke(mm)/ Displ. (cc)	Wheel-base (mm)	*Max Wheel Size (inch)*	Tire Size	Gear Ratios	Final Drive	Brakes (mm)	Weight (lbs)	Notes:
Dodge Viper SRT-10 Incl. Coupe (03-06)	102.4 x 100.6 8300	2510.2	18x10 (F) 19x13 (R)	(F) 275/35 (F) 315/35 (max) (R) 345/30 Maximum camber: (F) -3.0 w/ Dodge Motorsports T1 suspension package	2.66, 1.78, 1.30, 1.00, 0.74, 0.50	3.07	(F&R) 355 Disc	3600	Detachable Autoform hardtop shall be installed on convertible model (latches shall be replaced with positive fasteners), convertible top shall be removed. Throttle restrictor between each throttle body and plenum is mandatory: .060" flat steel plate with one 45.0mm hole. A .250" thick (max) steel or aluminum spacer is permitted between the throttle body and the restrictor to provide clearance for the throttle butterfly. This spacer shall replicate the dimensions of the stock throttle body flange (i.e. throttle bore, bolt pattern, idle-air bypass port dimensions, etc.) Throttle body spacer bore(s) shall be no larger than the stock throttle body bore diameter at the gasket surface, and shall not be radiused in any way. Throttle restrictor may include idle air control and/or PCV orifice.The following parts are allowed: Dodge differential and trans. coolers, part # 4510173, Ron Davis radiator # 18VP03, Mopar performance fan delete kit #P5153260, Phoenix SRT10 electric fan kit #PPI123321, Mopar swing oil pickup kit # 4510174, Trans. mount # P4510179, Dodge Motorsports T1 suspension kit part # P5153251.This max. tire supersedes TCS 9.1.10.D.7.b. Rear parking brake calipers may be removed. Hypercoil springs #188A0750 (F) and 188A0800 (R) are allowed. B&M Shifter (PN45055) is permitted. *Oil pan part #5037735AC, oil pick up part #5038022AB, oil pick up tube part #5037312AE are allowed. Entire parking brake assembly (including interior lever) may be removed.*
Ferrari 360 Modena & Challenge (00-02)	85.0 x 79.0 3586	2600	18 Alum	(F) 235/45 (R) 315/30 (max)	3.29, 2.16, 1.61, 1.27, 1.03, 0.95	4.44	(stock) (F&R) 330 Vented Disc (Challenge) (F) 355 x 32 Vented Disc (R) 330 x 18 Vented Disc	2825	Cars may be prepared to 2002 Ferrari Challenge specs. A welded steel cage that is bolted to the chassis/frame with appropriate backing plates is allowed. DOT tires are req'd. Weight per GCR. A throttle restrictor is req'd between each throttle body and plenum: 0.060" flat steel plate w/ one 65mm hole. This max. rear tire size supersedes TCS 9.1.10.D.7.b

T1	Bore x Stroke(mm)/ Displ. (cc)	Wheel-base (mm)	*Max Wheel Size (inch)*	Tire Size	Gear Ratios	Final Drive	Brakes (mm)	Weight (lbs)	Notes:
Ford Mustang Cobra SVT (hardtop) (03-04)	90.2 x 90.0 4601	2573	17 x 9	275/40	2.66, 1.78, 1.30, 1.0, 0.80, 0.63	3.55	(F) 330 Vented Disc (R)296 Vented Disc	3780	The following Steeda parts are allowed: Ultra-Cool Radiator PN 051-1097, Independent Rear Suspension Bushing Kit PN 555-4015 and PN 555-4016, Differential Cover Brace PN 555-7716, Performance Springs PN 555-8205, Cold Air Package PN 555-3115. The following Ford parts are allowed: Trans. cooler kit PN M-7095-SR, rear diff. cooler PN M-4000-K.
Lotus Sport Exige Cup 255 (2007)	82.0 x 85.0 1796	2300	16 x 7 (F) 17 x 8 (R)	195/50 (F) 225/45 (R)	3.12, 2.05, 1.48, 1.17, 0.92, 0.82		(F) 308 Vented Disc (R) 288 Vented Disc	2090	*Rear cage braces may pass through rear window.*
Maserati Coupe GT Cambio-corsa (2004)	92.0 x 79.3 4244	2660	18 x 8 (F) 18x9.5 (R)	235/40 (F) 265/35 (R)	3.29, 2.16, 1.61, 1.27, 1.03, 0.85	3.73	(F) 333 Vented Disc (R) 310 Vented Disc	Coupe: 3825 Cam-biocorsa: 3900	Factory paddle shifter is permitted.
Pontiac Firebird WS-6 (98-02)	99.0 x 92.0 5666	2568	17 x 9 (F & R) 16 x 10 (F) 16 x 11 (R)	275/40	2.66, 1.78, 1.30, 1.00, 0.74, 0.50	3.42	(F) 300 Vented Disc (R) 302 Vented Disc	3280	35mm front swaybar & 31mm rear sway bar is permitted. Factory optional oil cooler (P/N 52452158) and associated plumbing parts are permitted. Springs: (F) 550 lb/in (P/N TBD), (R) 130 lb/in (P/N TBD)
Porsche 911 GT3 (03-*05*)	100.1 x 76.5 3600	2355	18 x 8.5 (F) 18 x 11 (R)	235/40 (F) 295/30 (R)	3.82, 2.15, 1.56, 1.21, 1.00, 0.85	3.44	(F) 350 Vented Disc (R) 330 Vented Disc	3100	H&R Springs (F) HRF 200-60-100, (R) HRF 140-70, tender springs 60-60-25, and spring holders ZT-1-X002A01 allowed.
Porsche 911 Carrera S (05-07)	99.0 x 82.8 3824	2350	(F) 19 x 8 (R) 19 x 11	(F) 235/35 (R) 295/30	3.91, 2.32, 1.61, 1.28, 1.08, .88	3.56	(F) 331 Vented Disc (R) 331 Vented Disc	2900	
Saleen Par-nelli Jones Mustang (2007)	90.2 x 90.0 4601	2720	18 x 9.5	275/40	3.38, 2.00, 1.32, 1.00, 0.68	3.73	(F) 355 Vented Disc (R) 300 Vented Disc	3460	
Steeda Q335 Mustang (2007)	90.2 x 96.5 4931	2720	19 x 9 (F) 19 x 10 (R)	285/35	3.38, 2.00, 1.32, 1.00, 0.68	3.73	(F) 355 Vented Disc (R) 300 Vented Disc	3460	

Notes:

T2	Bore x Stroke(mm)/ Displ. (cc)	Wheel-base (mm)	*Max Wheel Size (inch)*	Tire Size	Gear Ratios	Final Drive	Brakes (mm)	Weight (lbs)	Notes:
Acura NSX (97-03)	93.0 x 78.0 3200	2530	16x7(F) 17x8.5(R)	215/45/16 245/40/17	3.07, 1.96, 1.43, 1.12, 0.91, 0.72	4.06	(F) 297 Disc (R) 302 Disc	3100	
Acura TL Type S (07-08)	89.0 x 93.0 3471	2740	17 x 8	235/45	3.93, 2.48, 1.70, 1.25, 0.98, 0.77	3.29	(F) 310 Vented Disc (R) 282 Solid Disc	3660	H&R front springs (1027 lb/in) #180-60-180, rear springs (1827 lb/in) #120-60-320, and 24 mm rear sway bar Progressive Technology #62.0110 allowed.
Audi S4 (2004)	84.58 x 92.71 4162	2649	18 x 8 (F&R)	235/40 (F&R)	3.67, 2.05, 1.46, 1.33, 0.92, 0.78	3.89	(F) 340 Vented Disc (R) 300 Vented Disc	3920	
BMW M Coupe (2002)	87.0 x 91.0 3246	2459	18 x 9.0(F) 18 x 10 (R)	225/45 (F) 245/40 (R)	4.21, 2.49, 1.66, 1.24, 1.00	3.15		3350	*Euro Header part #11 62 7 833 500 and 62 7 833 501 allowed.*
BMW M3 (01-06)	87.0 x 91.0 3246	2731	18 x 9 (F) 18 x 9 (R)	275/35 (F & R)	4.23, 2.53, 1.67, 1.23, 1.00, 0.83	3.62	(F) 325 x 28 Vented Disc (R) 328 x 20 Vented Disc	3500	Factory paddle shifter is permitted. Fluidyne oil cooler # DB30816-STD allowed. Turner Motorsports Suspension package #TMST2M3 allowed. This consists of front springs TMS600-10-250, rear springs TMS650-8-250, front sway bar #TMSF23.235, rear sway bar #TMSR23.327. Turner brake duct kit #TMSBRAKE46 allowed. This max tire size supersedes TCS tire rule section 9.1.10.D.7.b. Euro Header part #11 62 7 833 500 and 62 7 833 501 allowed.
BMW 135i (08-09)	84.0 x 89.6 2679	2761	(F) 18 x 8 (R) 18 x 9	(F) 225/40 (R) 255/35	4.00, 2.40, 1.58, 1.19, 1.00, 0.87	3.08	(F) 348 Vented Disc (R) 336 Vented Disc	*3680*	ZSP suspension package allowed. Sport seat package allowed. (2) 29.5mm Turbo Inlet Restrictor required.
BMW 330i/ Ci (01-03)	84.0 x 89.6 2979	2726	17 x 9 (F&R)	Any DOT tire fitting stock body w/o modifications	4.21, 2.45, 1.66, 1.24, 1.00	2.93	(F) 325 x 28 Vented Disc (R) 325 x 20 Vented Disc	3335	Racing Dynamics sway bar set (24mm & 21mm bars (one each)) is permitted. 350 lb. front springs w/ threaded collars and 400 lb. rear springs w/ adjusters are permitted.
BMW 330i Sedan (2006)	85.1 x 87.9 2996	2761	17 x 8 (F&R)	225/45 (F&R)	4.35, 2.50, 1.67, 1.23, 1.00, 0.85	3.15	(F) 330 Vented Disc (R) 335 Vented Disc	3335	

T2	Bore x Stroke(mm)/ Displ. (cc)	Wheel-base (mm)	*Max Wheel Size (inch)*	Tire Size	Gear Ratios	Final Drive	Brakes (mm)	Weight (lbs)	Notes:
BMW 335CI (2007)	84.0 x 89.6 2679	2761	(F) 18 x 8 (R) 18 x 9	(F) 225/40 (R) 255/35	4.00, 2.40, 1.58, 1.19, 1.00, 0.87	3.08	(F) 348 Vented Disc (R) 336 Vented Disc	3680	ZSP suspension package allowed. Sport seat package allowed. (2) 29.5mm Turbo Inlet Restrictors required.
BMW Z4 3.0L (03-04)	84.1 x 89.7 2986	2494	17 x 8 (F&R)	225/45	4.35, 2.50, 1.66, 1.24, 1.00, 0.85	3.07	(F) 300 Vented Disc (R) 294 Vented Disc	3120	Detachable hardtop shall be installed (latches shall be replaced with positive fasteners), convertible top shall be removed.
BMW Z4 M Coupe (2007)	87.0 x 91.0 3246	2497	(F) 18 x 8 (R) 18 x 9 *or (F) 18 x 9 (R) 18 x 9 at additional 25 lbs.*	(F) 225/45 (R) 255/40	4.35, 2.50, 1.67, 1.23, 1.00, 0.85	3.62	(F) 345 Vented Disc (R) 328 Vented Disc	3375	Euro *manifold* part #11 62 7 833 500 and 62 7 833 501 allowed.
Cadillac CTS-V (04-05)	99.0 x 92.0 5665	2880	18 x 9.5 (F&R)	245/45 or 275/35 max.	2.97, 2.07, 1.43, 1.00, 0.84, 0.56	3.73	(F) 355 Vented Disc (R) 365 Vented Disc	*3750*	GM Cooling Kit allowed (Engine Oil Cooler Kit PN 25534461, Trans. Cooler PN 25534462, Rear dif. cooler PN 25534463, Brake duct extension (through fog light) PN 25534464, Radiator kit PN 25534465, Fuel tank sender kit PN 25534466. A max of 275 tires on 9.5-inch wide wheels is allowed. This max. tire size supersedes TCS 9.1.10.D.7.b. Front Spring (550lb) #25534467, Rear Spring (550lb) #25534468, Front Roll Bar (36mm) # 25534469, Front Isolator #25534470, Rear Roll Bar (24mm) #25534471, Rear Isolator #25534472, F&R Links #25534473
Cadillac CTS-V (06-07)	101.68 x 92.0 5967	2880	18 x 9.5 (F&R)	245/45 or 275/35 max.	2.97, 2.07, 1.43, 1.00, 0.84, 0.56	3.73	(F) 355 Vented IDsc (R) 365 Vented Disc	*3750*	GM Cooling Kit allowed (Engine Oil Cooler Kit PN 25534461, Trans. Cooler PN 25534462, Rear dif. cooler PN 25534463, Brake duct extension (through fog light) PN 25534464, Radiator kit PN 25534465, Fuel tank sender kit PN 25534466. A max of 275 tires on 9.5-inch wide wheels is allowed. This max. tire size supersedes TCS 9.1.10.D.7.b. Front Spring (550lb) #25534467, Rear Spring (550lb) #25534468, Front Roll Bar (36mm) # 25534469, Front Isolator #25534470, Rear Roll Bar (24mm) #25534471, Rear Isolator #25534472, F&R Links #25534473

T2	Bore x Stroke(mm)/ Displ. (cc)	Wheel-base (mm)	*Max Wheel Size (inch)*	Tire Size	Gear Ratios	Final Drive	Brakes (mm)	Weight (lbs)	Notes:
Chevrolet Camaro SS & Z-28 (98-02)	99.0 x 92.0 5666	2568	17x9 (F&R)	275/40	2.66, 1.78, 1.30, 1.00, 0.74, 0.50	3.42	(F)300 Vented (R)302 Vented	3530	Power steering cooler (option code V12) is permitted. Factory optional oil cooler (P/N 52452158) and associated plumbing parts are permitted. Front spring rate shall be 280-320 lbs. per inch and the minimum free length is 13 3/4 inches. Severn Canton accusump part # CA24024 or CA24006, along with Electric solenoid W/ epc # CA24273, Ac¬cusump Check Valve # CA2428, and Wheel to Wheel Adapter block # 0760-50001, and related hoses and mounting brackets are permitted. GM oil and diff coolers #12480080 allowed. Ron Davis Radiator 11-16CA0002 allowed. Z28 can use original hood.
Chevrolet Camaro (2010)	103.3 x 92.0 6162	2853	20 x 8 (F) 20 x 9 (R)	245/40 (F) 275/40 (R)	3.01, 2.07, 1.43, 1.0, 0.84, 0.57	3.45	(F)355 x 32 Vented (R)365 x 28 Vented	3990	
Chevrolet Cobalt SS (08-09)	85.3 x 86.1 1998	2631	18 x 9	225/45	3.38, 1.76, 1.18, 0.89, 0.70	4.05	(F) 315 Vented Disc (R) 292 Solid Disc	3150	38mm Turbo Inlet restrictor required. Front springs part # CCS635, rear springs # CCS639, front control arms # CCS636 and CCS637.
Chevrolet HHR SS (08-09)	85.3 x 86.1 1998	2631	18 x 9	225/45	3.38, 1.76, 1.18, 0.89, 0.70	4.05	(F) 315 Vented Disc (R) 270 Solid Disc	3150	38mm Turbo Inlet restrictor required. Front springs part # CCS635, rear springs # CCS639, front control arms # CCS636 and CCS637.
Dodge SRT-4 (03-05)	88.0 x 101.1 2458	2667	17 x 8.5 (F&R)	205/50 or 225/50	3.47, 2.05, 1.37, 0.97, 0.76	3.53	(F) 280 Vented Disc (R) 220 Solid Disc	2950	C & R Heavy Duty Radiator a/ Spal fan, part # 4051110300-DP allowed. 38mm turbo inlet restrictor required.
Ford Mustang Cobra (99-02)	90.2 x 90.0 4601	2573	17 x 9 (F&R)	245/45 or 255/45	3.37, 1.99, 1.33, 1.00, 0.67	3.27	(F) 330 x 28 Vented Disc (R) 295 x 18 Vented Disc	3680	Service port mounted aftermarket PROM is permitted. 17 x 9 wheels and 255/45 tires are from 1995 Cobra R.
Ford Mustang Coupe GT & Shelby GT (05-*11*)	90.2 x 90.0 4601	2720	18 x 9.5 (F&R)	255/40 (F&R) or 255/45 (F) 285/40 (R)	3.38, 2.00, 1.32, 1.00, 0.675	3.55 or 3.73	(F) 316 / 355 Vented Disc (R) 300 Vented Disc	3480	The following parts are allowed: Strut tower brace part #M20201-S197, Radiator #M-8005-S197, Ford Spring kit M-5300-K, sway bars M-5490-A, damper kit M-18000-A.

T2	Bore x Stroke(mm)/ Displ. (cc)	Wheel-base (mm)	*Max Wheel Size (inch)*	Tire Size	Gear Ratios	Final Drive	Brakes (mm)	Weight (lbs)	Notes:
Ford Mustang Mach I (03-04)	90.2 x 90.0 4601	2572	17 x 9 (F&R)	245/45 or 255/45	3.38, 2.00, 1.32, 1.0, 0.62	3.55		3230	Sean Hyland Motorsports Brake Duct Kit Part # SHMVDK-TF approved. Bulitt Springs allowed, part # 1R3Z-5310-CA (F) 1R3Z-5560-AA (R). The following parts are allowed: Steeda springs (F) 223-121-1000, (R) 223-SAM350RSR, rear sway bar 006-470, front sway bar bushings 122-4-5135-G, strut brace 555-5714, clutch cable 555-7041 and 555-7025, Cobra R brakes are permitted with an additional 25 lbs added.
Ford Mustang GT 2011-12	*(92.220) x (92.7) / (4957)*	*107.1*	*18 x 10 (F) 18 x 10 (R)*	*285 (F) 305 (R)*	*3.66, 2.43, 1.69, 1.32, 1.00, .65*	*3.73*	*(F) (355) x (32.1) Vented (R) (300) x (19.2) Vented*	*3650*	*The following parts are allowed: GT/CS Front Fascia #BR3Z-17626-AA, GT/CS Rear Fascia #AR3Z-17F828-AA, Ford Accessories Spoiler #AR3Z-6344210-CA, 14" Brembo Brake Kit #M-2300-S, Rear Axle Cover #M-4033-K, Spring Kit #M-5300, Strut Tower Brace #M-20201-S197, Swaybar Kit #M-5490, Jounce Bumper Kit # M-5570-A, Panhard Bar #M-4264-A, Rear Lower Control Arms #M-5649-R1, Rear Upper Shock Mount #M-18197-A.*
Hyundai Genesis Coupe (2010-)	*96.0 x 87.0 3778*	*2819.4*	*19 x 8 (F) 19 x 8.5 (R)*	*225/40 (F) 245/40 (R)*	*3.848, 2.317, 1.623, 1.233, 1.000, 0.867*	*3.54*	*340.4 disc (F) 330.2 disc (R)*	*3240*	*Track Pack allowed*
Infiniti G35 Coupe (03-06)	95.5 x 81.4 3498	2850	19 x 9 (F) 19 x 10 (R)	225/40 (F) 245/40 (R) 285/30 (max) (F&R)	3.79, 2.32, 1.62, 1.27, 1.00, 0.79	3.54	(F) 324 Vented Disc (R) 322 Solid Disc	3268	The following are allowed: Nissan oil cooler kit #21300-RSZ33, Nissan power steering cooler kit #49790-RSZ30-US, Rear diff cover Nismo part #99996-35TDK, Nissan Mtspts. Brake duct kit # 99996-Z3344, Nissan heavy duty spring kit part #99996-65Z3OUS, Nismo sway bar kit #99996-RSZ3OUS. This max. tire size supersedes TCS 9.1.10.D.7.b. Modifications to the stock fender liner is not permitted. Track option areo package permitted.

T2	Bore x Stroke(mm)/ Displ. (cc)	Wheel-base (mm)	*Max Wheel Size (inch)*	Tire Size	Gear Ratios	Final Drive	Brakes (mm)	Weight (lbs)	Notes:
Lotus Club Racer (2008)	82.0 x 85.0 1796	2301	16x6.5 (F) 17x7.5 (R)	195/50 (F) 225/45 (R)	3.12, 2.05, 1.48, 1.17, 0.96, 0.82	4.53	(F) 308 Vented Disc (R) 288 Vented Disc	2190	An SCCA approved welded steel cage that is bolted to the chassis/frame is allowed. The floor may be modified to facilitate the rollcage mounting points. The stock extruded aluminum chassis satisfies the requirement for forward anti-intrusion braces. The factory roll hoop shall be replaced with a single continuous hoop. Sway bar #A120L0020F, spring front #A120C0019H, spring rear #A120D0047H allowed. Lotus Elise oil accumulator system part # ALS3E0022J (accusump part #24026 and electric valve part #24270) is allowed. Lotus Track use chassis brace kit #lotac05377 allowed. *Moroso Oil Pan part # 20970 is allowed. Rear cage braces may pass through rear window. Front spring, Eibach part # 600.225.0475 and rear spring, Eibach part # 800.225.0650 allowed.*
Lotus Exige S / S220 / S240 / Elise SC (2007-2010)	82.0 x 85.0 / 1796	2301	16x6.5 (F) 17x7.5 (R)	195/50 (F) 225/45 (R)	3.17, 2.05, 1.48, 1.17, 0.92, 0.81	4.53	(F) 288 Vented Disc (R) 288 Vented Disc (F) 308 Vented Disc (R) 288 Vented Disc	2190	An SCCA approved welded steel cage that is bolted to the chassis/frame is allowed. The floor may be modified to facilitate the rollcage mounting points. The stock extruded aluminum chassis satisfies the requirement for forward anti-intrusion braces. The factory roll hoop shall be replaced with a single continuous hoop. Sway bar #A120L0020F, spring front #A120C0019H, spring rear #A120D0047H allowed. Lotus Elise oil accumulator system part # ALS3E0022J (accusump part #24026 and electric valve part #24270) is allowed. Lotus Track use chassis brace kit #lotac05377 allowed. *Moroso Oil Pan part # 20970 is allowed. Rear cage braces may pass through rear window. Front spring, Eibach part # 600.225.0475 and rear spring, Eibach part # 800.225.0650 allowed.*

T2	Bore x Stroke(mm)/ Displ. (cc)	Wheel-base (mm)	*Max Wheel Size (inch)*	Tire Size	Gear Ratios	Final Drive	Brakes (mm)	Weight (lbs)	Notes:
Lotus Elise (2005-2010)	82.0 x 85.0 1796	2301	16x6.5 (F) 17x7.5 (R)	195/50 (F) 225/45 (R)	3.12, 2.05, 1.48, 1.17, 0.96, 0.82	4.53	(F) 288 Vented Disc (R) 288 Vented Disc	2090	Detachable hardtop shall be installed (latches shall be replaced with positive fasteners), convertible top shall be removed. An SCCA approved welded steel cage that is bolted to the chassis/frame is allowed. The floor may be modified to facilitate the rollcage mounting points. The stock extruded aluminum chassis satisfies the requirement for forward anti-intrusion braces. The factory roll hoop shall be replaced with a single continuous hoop. Lo- tus Elise oil accumulator system part # ALS3E0022J (accusump part #24026 and electric valve part #24270) is allowed. Lo- tus Track use chassis brace kit #lotac05377 allowed. Sway bar #A120L0020F, spring front #A120C0019H, spring rear A120D0047H allowed. *Moroso Oil Pan part # 20970 is allowed. Rear cage braces may pass through rear window. Front spring, Eibach part # 600.225.0475 and rear spring, Eibach part # 800.225.0650 allowed.*
Lotus Exige (06)	82.0 x 85.0 1796	2301	16x6.5 (F) 17x7.5 (R)	195/50 (F) 225/45 (R)	3.12, 2.05, 1.48, 1.17, 0.96, 0.82	4.53	(F) 288 Vented Disc (R) 288 Vented Disc	2090	An SCCA approved welded steel cage that is bolted to the chassis/frame is allowed. The floor may be modified to facilitate the rollcage mounting points. The stock extruded aluminum chassis satisfies the requirement for forward anti-intrusion braces. The factory roll hoop shall be replaced with a single continuous hoop. Lotus Elise oil accumulator system part #ALS3E0022J (accusump part #24026 and electric valve part #24270) is allowed. Lotus Track use chassis brace kit #lotac05377 allowed. Sway bar #A120L0020F, spring front #A120C0019H, spring rear A120D0047H allowed. *Moroso Oil Pan part # 20970 is allowed. Rear cage braces may pass through rear window. Front spring, Eibach part # 600.225.0475 and rear spring, Eibach part # 800.225.0650 allowed.*
Mazda Maz-daspeed3 (2007)	87.5 x 94.0 2260	2639	18 x 7	215/45	3.54, 2.24, 1.54, 1.17, 1.09, 0.85	1-4: 3.94 5-6: 3.35	(F) 300 Vented Disc (R) 280 Solid Disc	3250	

T2	Bore x Stroke(mm)/ Displ. (cc)	Wheel-base (mm)	*Max Wheel Size (inch)*	Tire Size	Gear Ratios	Final Drive	Brakes (mm)	Weight (lbs)	Notes:
Mitsubishi Lancer Evo 8/9 / RS / GSR / MR (03-06)	85.0 x 88.0 1997	2624	*17 x 9* (F&R)	235/45 (F&R) *or 275/45 (F&R)*	2.93, 1.95, 1.41, 1.03, 0.72 or 2.91, 1.94, 1.43, 1.10, 0.87, 0.69	4.53	(F) 276 / 320 Vented Disc (R) 284 / 300 Vented Disc	3480	Permacool trans. oil cooler #1006 or Setrab #SET616 and Mocal pump # MOC-17522HT, AMS front and rear springs #AMS-SC-CA01 allowed or AMS front and rear spring kit #AMS-SCCA02 including Genesis Technologies 2'' spacer allowed. 41mm Turbo Inlet Restrictor required. Koyo Radiator #KOY-R2676 allowed. Alternate AMS front sway bar permitted #AMS-SCCA-SBF02, alternate rear sway bar permitted #AMS-SCCA-SBR02.
Mitsubishi Lancer Evo X / RS / GSR / MR (08-11)	*85.0 x 88.0 1997*	*2624*	*17 x 9 (F&R)*	*235/45 (F&R) or 275/45 (F&R)*	*2.93, 1.95, 1.41, 1.03, 0.72 or 2.91, 1.94, 1.43, 1.10, 0.87, 0.69*	*4.53*	*(F) 276 / 320 Vented Disc (R) 284 / 300 Vented Disc*	*3530*	*Permacool trans. oil cooler #1006 or Setrab #SET616 and Mocal pump # MOC-17522HT, AMS front and rear springs #AMS-SC-CA01 allowed or AMS front and rear spring kit #AMS-SCCA02 including Genesis Technologies 2'' spacer allowed. 41mm Turbo Inlet Restrictor required. Koyo Radiator #KOY-R2676 allowed. Alternate AMS front sway bar permitted #AMS-SCCA-SBF02, alternate rear sway bar permitted #AMS-SCCA-SBR02.*
Nissan 350Z Track/ Touring/ Standard/ Nismo (03-08)	95.5 x 81.4 3498	104.3	18 x 9 (F) 18 x 10 (R)	245/40 or 225/45 (F) 265/35 or 245/45 (R) 285/30 (max) (F&R)	3.79, 2.32, 1.62, 1.27, 1.00, 0.79	3.54	(F) 296/324 Vented Disc (R) 292/332 Vented Disc	*3168*	The following are allowed: Track option Aero package, Nissan oil cooler kit #21300-RSZ33, Nissan power steering cooler kit #49790-RSZ30-US, Rear diff cover Nismo part #99996-35TDK, Nissan Mtspts. Nissan heavy duty spring kit part #99996-65Z3OUS, Nismo sway bar kit #99996-RSZ3OUS. This max. tire size supersedes TCS 9.1.10.D.7.b. Modifications to the stock fender liner is not permitted.
Nissan 370Z (09-10)	95.5 x 86.0 3696	2550	19 x 9 (F) 19 x 10 (R)	*275/30 (F)* 275/35 (R)	3.79, 2.32, 1.62, 1.27, 1.00, .79	3.69	(F)320 x 28 Vented (R)320 x 16 Vented	3400	*5300S-SS370 T-2 spring kit allowed; 54600-SS370 T-2 front and rear sway bar kit allowed. Sports Package is allowed.*
Nissan 370Z NISMO Edition (2010-)	*95.5 x 86.0 3696*	*2550*	*19 x 9 (F) 19 x 10 (R)*	*245/40 (F) 275/35 (R)*	*3.79, 2.32, 1.62, 1.27, 1.00, .79*	*3.69*	*(F) 356 x 33 Vented (R) 350 x 20.3 Vented*	*3500*	*May convert 370Z to NISMO Edition at NISMO Edition weight.*
Pontiac Firebird Formula/ Trans-Am & WS-6 (98-02)	99.0 x 92.0 5666	2568	17x9 (F&R)	275/40	2.66, 1.78, 1.30, 1.00, 0.74, 0.50	3.42	(F)300 Vented (R)302 Vented	3530 1LE: add 100 lbs.	Front spring rate shall be 280-320 lbs. per inch and the minimum free length is 13 3/4 inches. Canton accusump part # CA24024 or CA24006, along with Electric solenoid W/ epc # CA24273, Accusump Check Valve # CA2428, and Wheel to Wheel Adapter block # 0760-50001, and related hoses and mounting brackets are permitted. GM differential cooler #12480080 allowed.

T2	Bore x Stroke(mm)/ Displ. (cc)	Wheel-base (mm)	*Max Wheel Size (inch)*	Tire Size	Gear Ratios	Final Drive	Brakes (mm)	Weight (lbs)	Notes:
Pontiac GTO (04-06)	99.0 x 92.0 5665 101.68 x 92.0 5967	2788.9	17 x 9.5 (F&R)	245/45 or 275/35 (max) (F&R)	2.97, 2.07, 1.43, 1.00, 0.84, 0.57	3.46	(F) 296/320 Vented Disc (R) 286 Vented Disc	5665cc @ 3580 5967cc @ 3680	This max tire supersedes TCS tire rule section 9.1.10.D.7.b. Ron Davis radiator # 1-38GT05 allowed. Pratt & Miller brake duct kit GTO-K-004, trans. cooling kit GTO-K-001, diff. cooler GTO-K-002, oil cooler GTO-K-003 and Pedders springs (F) 2142, (R) 7643, Pedders front and rear sway bar kit #FAF0209071 allowed.
Pontiac Solstice GXP Coupe/ Convertible (07-09)	85.3 x 86.1 1998	2415	18 x 9.5	275/35	3.75, 2.26, 1.51, 1.00, 0.73	3.73	(F) 296 Vented Disc (R) 278 Solid Disc	3150	Detachable hardtop GM part #PCS-0664 shall be installed and convertible top shall be removed. Suspension option ZOK and Rear Spoiler (D52) allowed. This max tire size supersedes TCS 9.1.10.D.7.b. B&M cooler #70298 and Weldon Series 9200 pump may be used for differential and/or transmission cooling. The mounting and wiring associated with the installation of these coolers is unrestricted provided it serves no other purpose. Ron Davis radiator part #1-38S006 allowed. 38mm Turbo Inlet Restrictor required. *Brake calipers and rotors from Chevrolet Cobalt SS (08-09) permitted - part numbers 25900763 - left front caliper, 25900764 - right front caliper, 25902073 - left rear caliper, 25902074 - right rear caliper, 25869424 - rear caliper bracket, 25994100 - front rotors, 15921402 - rear rotors.*
Porsche 911 / 996 (98-*05*)	96.0 x 78.0 3400 100.1 x 76.5 3600	2454	18 x 8.5 (F) 18 x 11 (R)	Any DOT tire fitting stock body w/o modi-fications	3.82, 2.20, 1.52, 1.22, 1.02, 0.84	3.44	(F) 318 Disc (R) 299 Disc	3500	Engine & transmission coolers are free. Ducting for coolers is free, provided it doesn't change size and/or shape of factory body panels. Spring rates are free. Sway bar size & configuration is free. Ducting of air to rotors is allowed. Removal of rotor dust shields is allowed. Seats, steering wheel & shift knobs may be replaced. Spoilers & bumper/airdams are free provided they do not exceed the max. body width by any amount and/or the max. body length by more than 1". Rear wings may be no higher, relative to the roofline, than a factory, non-extended, 3.8 RSR wing. Camber adjustment slots may be elongated. Porsche Motorsport rear control arms allowed.
Porsche Boxster S (00-03)	93.0 x 78.0 3179	2415	17 x 7 (F) 17 x 8.5(R)	205/50 (F) 255/40 (R)	3.82, 2.20, 1.52, 1.22, 1.02, 0.84	3.44	(F) 318 x 28 Vented & cross-drilled (R) 300 x 25 Vented & cross-drilled	2880	OEM hardtop req'd (latches shall be replaced w/ positive fasten-ers). Convertible top shall be removed. Front spoiler, rear spoiler, and rocker panel extensions from OEM Porsche factory aero kit are permitted. Sport suspension pkg. is permitted. Factory bolt-in rollbar may be removed to facilitate the installation of the required rollcage.

T2	Bore x Stroke(mm)/ Displ. (cc)	Wheel-base (mm)	*Max Wheel Size (inch)*	Tire Size	Gear Ratios	Final Drive	Brakes (mm)	Weight (lbs)	Notes:
Porsche Boxster S (2005)	93.0 x 78.0 3179	2415	18 x 8 (F) 18 x 9 (R)	205/50 (F) 255/40 (R)	3.67, 2.05, 1.41, 1.13, 0.97, 0.82	3.87	(F) 318 x 28 Vented & cross-drilled (R) 300 x 25 Vented & cross-drilled	3240	
Porsche Caymen (2006)	96.0 x 78.0 3387	2416	18 x 8 (F) 18 x 9 (R)	235/40 (F) 265/40 (R)	3.31, 1.95, 1.41, 1.13, 0.97, 0.82	3.88	(F) 318 Vented and Cross-drilled (R) 299 Vented and Cross-drilled	2775	
Porsche Caymen S *(2006-2008)*	96.0 x 78.0 3387	2416	18 x 8 (F) 18 x 9 (R)	235/40 (F) 265/40 (R)	3.31, 1.95, 1.41, 1.13, 0.97, 0.82	3.88	(F) 318 Vented and Cross-drilled (R) 299 Vented and Cross-drilled	3300	
Porsche Caymen S (2010)	*96.0 x 78.0 3387*	*2416*	*18 x 8 (F) 18 x 9 (R)*	*235/40 (F) 265/40 (R)*	*3.31, 1.95, 1.41, 1.13, 0.97, 0.82*	*3.88*	*(F) 318 Vented and Cross-drilled (R) 299 Vented and Cross-drilled*	*3470*	

T2	Bore x Stroke(mm)/ Displ. (cc)	Wheel-base (mm)	*Max Wheel Size (inch)*	Tire Size	Gear Ratios	Final Drive	Brakes (mm)	Weight (lbs)	Notes:
Saturn Sky Red Line (07-09)	85.3 x 86.1 1998	2415	18 x 9.5	275/35	3.75, 2.26, 1.51, 1.00, 0.73	3.73	(F) 296 Vented Disc (R) 278 Solid Disc	3250	Detachable hardtop GM part #PCS-0664 shall be installed and convertible top shall be removed. Suspension option ZOK and Rear Spoiler (D52) allowed. This max tire size supersedes TCS 9.1.10.D.7.b. B&M cooler #70298 and Weldon Series 9200 pump may be used for differential and/or transmission cooling. The mounting and wiring associated with the installation of these coolers is unrestricted provided it serves no other purpose. Ron Davis radiator part #1-38S006 allowed. 38mm Turbo Inlet Restrictor required. *Quantum Motorsports brake duct kit #09820 is allowed. Brake calipers and rotors from Chevrolet Cobalt SS (08-09) permitted - part numbers 25900763 - left front caliper, 25900764 - right front caliper, 25902073 - left rear caliper, 25902074 - right rear caliper, 25869424 - rear caliper bracket, 25994100 - front rotors, 15921402 - rear rotors.*
Subaru Impreza WRX STi (03-07)	99.5 x 79.0 2457	2540	17 x 9	*275/40*	3.64, 2.38, 1.76, 1.35, 0.97, 0.76	3.9	(F) 323 Vented Disc (R) 313 Vented Disc	3480	The following parts are allowed: Fluidyne oil cooler # DB30120-10, trans. cooler # DB30115-8, diff. cooler # DB30115-8, cooler pump # WEL-K9200A, Mocal oil cooler #825a105, trans cooler # oc1197-6, Phoenix Performance brake duct kit # IPBK01. 41mm Turbo Inlet Restrictor required. AMS front and rear springs #AMS-SCCA-STiST1 allowed. Front Sway bar Whiteline PN #BSF36XXZ and Rear Sway bar Whiteline PN #BSF37XZ allowed. Racecomp Brake duct kit part #RCE-CFKBK is allowed. *Baldwin Motors spring package part BMI-T2SP1, permitted (includes: Front Hypercoil springs 2.25" ID / 7"x600 psi & helper springs, Rear Hypercoil springs 2.50" ID / 8"x550 psi & helper springs, Racecomp Engineering rear top perch adaptors, Racecomp Engineering modified rear top hats).*
Subaru Impreza WRX STi *(08-11)*	99.6 x 79.0 2457	2624	17 x 9	235/45	3.64, 2.24, 1.52, 1.14, 0.97, 0.76	3.90 Front 3.55 Rear	(F)326 Vented (R)316 Vented	3480	41mm Turbo Inlet Restrictor required. *Phoenix Performance 400 psi front springs, 500 psi rear springs, 25mm front sway bar, 22mm rear sway bar permitted.*

T3	Bore x Stroke(mm)/ Displ. (cc)	Wheel-base (mm)	*Max Wheel Size (inch)*	Tire Size	Gear Ratios	Final Drive	Brakes (mm)	Weight (lbs)	Notes:
Audi TT Quatro Coupe (03-05)	81.0 x 86.4 1781	2428	18 x 8 (F&R)	225/45 (F&R)	3.42, 2.11, 1.48, 1.15, 1.17, 0.97	4.2	(F) 312 Vented Disc (R) 256 Vented Disc	3340	Radiator from 3.2L allowed.
BMW 325i Sedan (2006)	85.1 x 87.9 2996	2761	16 x 7 (F&R)	205/55 (F&R)	4.32, 2.46, 1.66, 1.23, 1.00, 0.85	3.23	(F) 300 Vented Disc (R) 300 Vented Disc	2950	
BMW Z4 (03-05)	84.0 x 75.0 2494	2495	17 x 8 (F&R)	225/50 or 225/45	4.23, 2.52, 1.66, 1.22, 1.00	3.46	(F) 286 Vented DIsc (R) 280 Solid Disc	2900	Detachable hardtop shall be installed (latches shall be replaced w/ positive fasteners), convertible top shall be removed. H&R Sport Spring kit #50421 allowed.
BMW Z4 3.0si Coupe (07-08)	85.1 x 87.9 2996	2495	*18x8 (F&R)*	225/45	4.35, 2.50, 1.66, 1.23, 1.00, 0.85	road-ster: 3.23 coupe: 3.46.	(F) 325 x 12.8 Vented Disc (R) 294 x 11.6 Solid Disc	*3400*	
Chevrolet Camaro (2010)	94.0 x 85.6 3564	2853	20x8(F) 20x8(R)	245/45	4.48, 2.58, 1.63, 1.19, 1.00, .75	3.27	(F)337 x 30 Vented (R)315 x 23 Vented	*3600*	
Chevrolet Cobalt SS (05-07)	86.0 x 86.1 1998	2629	18 x *8*	*225/45* (F&R)	3.38, 1.76, 1.18, 0.89, 0.71	4.05	(F) 296 x 26 Vented Disc (R) 270 x 14 Solid Disc	*2950*	The following GM parts are allowed: front springs part # CCS635, rear springs # CCS639, front control arms # CCS636 and CCS637, shrouding kit # CCS644. Griffin radiator # 9D-18194-01 allowed. Due to the interior removal, the CRB has increased the weight from the 2008 Runoffs "as raced weight." *May be updated to (08-09) specifications (i.e, may convert supercharged car to turbocharged car), but all drivetrain and suspension components must be updated to later model; VIN will be disregarded for this conversion. Stage Two Supercharger kit, part #17803229 (includes Belt -#12597993 and Injector kit -#12597995) permitted.*

T3	Bore x Stroke(mm)/ Displ. (cc)	Wheel-base (mm)	*Max Wheel Size (inch)*	Tire Size	Gear Ratios	Final Drive	Brakes (mm)	Weight (lbs)	Notes:
Chevrolet Cobalt SS (08-09)	85.3 x 86.1 1998	2631	18 x *8*	225/45	3.38, 1.76, 1.18, 0.89, 0.70	4.05	(F) 315 Vented Disc (R) 292 Solid Disc	3100	35mm Turbo Inlet restrictor required. Front springs part # CCS635, rear springs # CCS639, front control arms # CCS636 and CCS637.
Chevrolet HHR SS (2008)	85.3 x 86.1 1998	2631	18 x 8	225/45	3.38, 1.76, 1.18, 0.89, 0.70	4.05	(F) 315 Vented Disc (R) 270 Solid Disc	3300	36mm turbo inlet restrictor is required. *Front springs part #CCS635, rear springs part #CCS639, front control arms part #CCS636 and #CCS637.*
Chrysler Crossfire Coupe (2004)	89.9 x 84.1 3199	2400	18x7.5 (F) 19 x 9 (R)	225/40 (F) 255/35 (R)	4.46, 2.61, 1.72, 1.25, 1.00, 0.84	3.27	(F) 300 Vented Disc (R) 277 Vented Disc	3180	
Dodge SRT-4 (03-05)	88.0 x 101.1 2458	2667	17 x 8.5 (F&R)	205/50 or 225/50	3.47, 2.05, 1.37, 0.97, 0.76	3.53	(F) 280 Vented Disc (R) 220 Solid Disc	3100	C & R Heavy Duty Radiator a/ Spal fan, part # 4051110300-DP allowed. 35mm turbo inlet restrictor required.
Ford Mustang GT (01-04) incl. Bullitt (2001)	90.2 x 90.0 4601	2573	17 x 9 (F&R)	255/45	3.37, 1.99, 1.33, 1.00, 0.67	3.27	(F) 330 x 28 Vented Disc (R) 295 x 18 Vented Disc	*3330*	
Ford Mustang V6 2011-12	*(95.490) x (86.70) / 226 CID*	*107.1*	*18 x 8 (F) 18 x8 (R)*	*245 (max) (F&R)*	*4.24, 2.54, 1.67, 1.24, 1.00, .70*	*3.31*	*(F) (355) x (32.1) Vented (R) (300) x (19.2) Vented*	*3575*	*The following parts are allowed: Ford Accessories Spoiler #AR3Z-6344210-CA Rear Axle Cover #M-4033-K, Spring Kit #M-5300, Strut Tower Brace #M-20201-S197, Swaybar Kit #M-5490, Jounce Bumper Kit # M-5570-A, Panhard Bar #M-4264-A, Rear Lower Control Arms #M-5649-R1, Rear Upper Shock Mount #M-18197-A*

T3	Bore x Stroke(mm)/ Displ. (cc)	Wheel-base (mm)	*Max Wheel Size (inch)*	Tire Size	Gear Ratios	Final Drive	Brakes (mm)	Weight (lbs)	Notes:
Honda S2000 (00-09)	87.0 x 84.0 1997 87.0 x 90.7 2157	2400	17x7.5 (F) 17x8.5 (R)	205/55 or 215/45 (F) 225/50 or 275/40 (R) (max)	3.13, 2.05, 1.48, 1.16, 0.97, 0.81 or 3.13, 2.05, 1.48, 1.16, 0.94, 0.76	4.1	(F) 300 Disc (R) 282 Disc	2.0L @ *2980* 2.2L @ *3070*	Detachable hardtop shall be installed (latches shall be replaced with positive fasteners), convertible top shall be removed. Factory bolt-in roll bar may be removed to facilitate the installation of the req'd roll cage. Passenger seat belt assembly may be removed in conjunction with factory bolt-in roll bar. Comptech differential housing part #550-040 allowed. Springs and sway bars from 2008 S2000 CR allowed. This max tire size supersedes TCS tire rule section 9.1.10.D.7.b. Updating and backdating of flywheel is not permitted. CR front fascia, rear deck lid, and wing is permitted.
Honda S2000 CR (08-09)	87.0 x 90.7 2157	2400	17x7.5 (F) 17x8.5 (R)	215/45 (F) 255/40 (R)	3.13, 2.05, 1.48, 1.16, 0.94, 0.76	4.1	(F) 300 Vented Disc (R) 283 Solid Disc	3020	
Hyundai Gen-esis Coupe (2010-)	*86.0 x 86.0 1998*	*2819.4*	*19 x 8 (F) 19 x 8.5 (R)*	*225/40 (F) 245/40 (R)*	*4.229, 2.467, 1.671, 1.233, 1.000, 0.794*	*3.909*	*340.4 (F) 330.2 (R)*	*3200*	*35mm Turbo Inlet Restrictor required; Track Pack allowed*
Lexus IS300 (02-05)	86.0 x 86.0 2997	2670	17 x 7.5 (F&R)	215/45 or 225/45 (F&R)	3.57, 2.06, 1.38, 1.00, 0.85	3.73	(F) 296 Vented Disc (R) 307.1 Solid Disc	3370	

T3	Bore x Stroke(mm)/ Displ. (cc)	Wheel-base (mm)	*Max Wheel Size (inch)*	Tire Size	Gear Ratios	Final Drive	Brakes (mm)	Weight (lbs)	Notes:
Lotus Elise (2005-2010)	82.0 x 85.0 1796	2301	16x6.5 (F) 17x7.5 (R)	195/50 (F) 225/45 (R)	3.12, 2.05, 1.48, 1.17, 0.96, 0.82	4.53	(F) 288 Vented Disc (R) 288 Vented Disc	*2310*	Detachable hardtop shall be installed (latches shall be replaced with positive fasteners), convertible top shall be removed. An SCCA approved welded steel cage that is bolted to the chassis/frame is allowed. The floor may be modified to facilitate the rollcage mounting points. The stock extruded aluminum chassis satisfies the requirement for forward anti-intrusion braces. The factory roll hoop shall be replaced with a single continuous hoop. Lo- tus Elise oil accumulator system part # ALS3E0022J (accusump part #24026 and electric valve part #24270) is allowed. Lotus Track use chassis brace kit #lotac05377 allowed. Sway bar #A120L0020F, spring front #A120C0019H, spring rear A120D0047H allowed. *Rear cage braces may pass through rear window.*
Lotus Exige (06)	82.0 x 85.0 1796	2301	16x6.5 (F) 17x7.5 (R)	195/50 (F) 225/45 (R)	3.12, 2.05, 1.48, 1.17, 0.96, 0.82	4.53	(F) 288 Vented Disc (R) 288 Vented Disc	*2310*	An SCCA approved welded steel cage that is bolted to the chassis/frame is allowed. The floor may be modified to facilitate the rollcage mounting points. The stock extruded aluminum chassis satisfies the requirement for forward anti-intrusion braces. The factory roll hoop shall be replaced with a single continuous hoop. Lo- tus Elise oil accumulator system part # ALS3E0022J (accusump part #24026 and electric valve part #24270) is allowed. Lotus Track use chassis race kit #lotac05377 allowed. Sway bar #A120L0020F, spring front #A120C0019H, spring rear A120D0047H allowed. *Rear cage braces may pass through rear window.*
Mazda6 s (03-07)	89.0 x 79.5 2967	2675	17 x 7 (F&R)	205/60 or 215/50	3.80, 2.13, 1.36, 0.94, 0.69	3.71	(F) 282 Vented Disc (R) 280 Solid Disc	3360	
Mazda Mazdaspeed3 (07-*09*)	87.5 x 94.0 2260	2639	18 x 7	215/45	3.54, 2.24, 1.54, 1.17, 1.09, 0.85	1-4: 3.94 5-6: 3.35	(F) 300 Vented Disc (R) 280 Solid Disc	3100	35mm Turbo Inlet restrictor required. *Mazda Motorsports Rear Swaybar Kit 32mm OD hollow Tube Part #: 0000-04-3420.*

T3	Bore x Stroke(mm)/ Displ. (cc)	Wheel-base (mm)	*Max Wheel Size (inch)*	Tire Size	Gear Ratios	Final Drive	Brakes (mm)	Weight (lbs)	Notes:
Mazda Maz-daspeed3 (10-11)	*87.5 x 94.0 2260*	*2309*	*18 x 7.5*	*225/45*	*3.21, 1.91, 1.37, 1.03, 0.95, 0.79*	*1-4: 4.19 5-6: 3.53*	*(F) 320 Vented Disc (R) 280 Solid Disc*	*3100*	*35mm Turbo Inlet restrictor required. Mazda Motorsports Rear Swaybar Kit 32mm OD hollow Tube Part #: 0000-04-3420.*
Mazda MazdaSpeed Miata (04-05)	83.0 x 85.0 1839	2266	17 x 7 (F&R)	205/40 (F&R)	3.76, 2.27, 1.65, 1.26, 1.00, 0.84	4.10	(F) 269 Vented Disc (R) 277 Solid Disc	2480	Detachable hardtop shall be installed. Latches shall be replaced with positive fasteners. Convertible top assembly shall be removed. Mazdaspeed radiator part # 0000-01-5503 and suspension kit #K-SPEC-M5-SUS9 allowed. Canton Accusump #24-026, Flex-a-lite install sandwich #3965, and related hoses, valve, and bracket allowed. Bell Engineering (BEGi) intercooler kit permitted #67022. Complete kit includes throttle inlet tube, cool air box and Forge Motorsports diverter valve. Kit must be used as a whole, including all hardware.
Mazda RX-8 (04-08)	2600	2703	18 x 8 (F&R)	225/45 (F&R)	3.76, 2.27, 1.65, 1.19, 1.0, 0.84 Alt: 3.82, 2.26, 1.54, 1.18, 1.00, 0.79	4.44 Alt: 4.78	(F) 323 Vented Disc (R) 303 Vented Disc	*2920*	Mazdaspeed radiator #0000-01-8501 allowed. Mazdaspeed front sway bar kit #0000-04-8302-AD allowed. Mazdaspeed coil spring kit #QSEA-34-01Z allowed. Use of 2009 R3 transmission is permitted with alternate gear ratios as listed. R3 transmission must be paired with the listed alternate final drive. *Mazda Motorsports Exhaust Header Part # 0000-06 and Mazda Motorsports Air Intake Part # 0000-06-8601.*
Mazda RX-8 R3 (2009)	2600	2703	19 x 8 (F&R)	225/40 (F&R)	3.82, 2.26, 1.54, 1.18, 1.00, 0.79	4.78	(F) 323 Vented Disc (R) 303 Vented Disc	2920	*Mazda Motorsports Exhaust Header Part # 0000-06 and Mazda Motorsports Air Intake Part # 0000-06-8601.*
Mini Cooper S (02-06)	77.0 x 85.8 1598	2467	17 x 8 (F&R)	225/40 (F&R)	4.17, 2.62, 1.97, 1.61, 1.33, 1.09	2.74	(F) 277 Vented Disc (R) 259 Solid Disc	2630	John Cooper Works Engine Tuning Package is allowed. Mini Mania strut tower plate #MMS7300 permitted. This max tire size supersedes TCS tire rule section 9.1.10.D.7.b.
Mini Cooper S (07-08)	77.0 x 85.8 1598	2467	17 x 8 (F&R)	225/40 (F&R)	3.31, 2.13, 1.48, 1.14, 0.95, 0.82	3.65	(F) 294 Vented Disc (R) 259 Solid Disc	2830	Mini Mania strut tower plate #MMS7300 permitted. This max tire size supersedes TCS tire rule section 9.1.10.D.7.b.

T3	Bore x Stroke(mm)/ Displ. (cc)	Wheel-base (mm)	*Max Wheel Size (inch)*	Tire Size	Gear Ratios	Final Drive	Brakes (mm)	Weight (lbs)	Notes:
Nissan Sentra SER SpecV (02-06)	89.0 x 100.0 2488	2535	17 x 7 (F&R)	215/45 (F&R)	3.15, 1.94, 1.39, 1.06, 0.81, 0.63	4.13	(F) 305 Vented Disc (R) 278 Solid Disc	2770	Nissan Motorsports sway bar kit #99996-B159K, Sport spring kit #54000-B15SW, and Oil cooler kit #21300-RSB15 allowed. Factory Brembo brakes rotor #40206-6Z900, and calipers #41001-6Z900 / 41011-6Z900 allowed.
Nissan 350Z Track/ Touring/ Standard/ Nismo (03-08)	95.5 x 81.4 3498	104.3	18 x *8.5* (F) 18 x *8.5* (R)	245/40 (max) (F&R)	3.79, 2.32, 1.62, 1.27, 1.00, 0.79	3.54	(F) 296/324 Vented Disc (R) 292/332 Vented Disc	*3325*	Base model and "Rev Up" engines: 50mm flat plate restrictor required. HR engine: two 40mm flat plate restrictors are required. *Rear differential cover, Nissan Motorsports part #99996-35TDK is allowed. Nissan heavy duty spring kit part #99996-65Z3OUS, Nismo sway bar kit #99996-RSZ3OUS allowed.*
Pontiac G6 GTP Coupe (2006)	99.0 x 84.0 3900	2852	18 x 7 (F&R)	225/50 (F&R)	3.77, 2.04, 1.36, 1.05, 0.85, 0.71	3.55	(F) 296.5 Vented Disc (R) 270.5 Solid Disc	3600	
Saturn Ion Redline (04-07)	86.0 x 86.1 1998	2629	17 x 8 (F&R	215/45 (F&R)	3.38, 1.76, 1.18, 0.89, 0.71	4.05	(F) 296 Vented Disc (R) 270 Solid Disc	2890	The following GM parts are allowed: front springs part # CCS635, rear springs # CCS639, front control arms # CCS636 and CCS637, shrouding kit # CCS644. Griffin radiator # 9D-18194-01 allowed.
Scion tC (2005)	88.5 x 96.0 2326	2700	17 x 7 (F&R)	215/45 (F&R)	3.54, 2.05, 1.33, 0.97, 0.78	4.24	(F) 275 Vented Disc (R) 269 Solid Disc	2905	
Subaru Legacy GT Sedan/ Wagon (04-08) Spec B (08-09)	99.5 x 79.0 2457	2669.5	18 x 8 (F&R)	215/45 (F&R) 245/35 (max) (F&R)	3.17, 1.88, 1.30, 0.97, 0.74	4.11	(F) 312.4 (R) 287	3410	This max. tire size supersedes TCS 9.1.10.D.7.b. 38mm Turbo Inlet Restrictor is required.
Subaru Impreza WRX *(02-07)*	92.0 x 75.0 1994	2525	*16 x 8* (F&R)	205/55 (F&R)	3.45, 1.95, 1.37, 0.97, 0.74	3.9	(F) 290.4 Vented Disc (R) 262 Solid Disc	3085	Phoenix Performance brake duct kit #IPBK01 allowed. 37mm Turbo Inlet Restrictor is required. Racecomp Brake duct kit part #RCE-CFKBK is allowed.

T3	Bore x Stroke(mm)/ Displ. (cc)	Wheel-base (mm)	*Max Wheel Size (inch)*	Tire Size	Gear Ratios	Final Drive	Brakes (mm)	Weight (lbs)	Notes:
Subaru Impreza WRX 5 door (02-07)	*92.0 x 75.0 1994*	*2573*	*16 x 8 (F&R)*	*205/55 (F&R)*	*3.45, 1.95, 1.37, 0.97, 0.74*	*3.9*	*(F) 290.4 Vented Disc (R) 262 Solid Disc*	*3085*	*Phoenix Performance brake duct kit #IPBK01 allowed. 37mm Turbo Inlet Restrictor is required. Racecomp Brake duct kit part #RCE-CFKBK is allowed.*
Subaru WRX TR (06-07)	99.5 x 79.0 2457	2525	17 x 8 (F&R)	215/45 or 245/35 max (F&R)	3.17, 1.88, 1.30, 0.97, 0.74	4.11	(F) 292 Vented Disc (R) 287 Vented Disc	3360	This max tire size supersedes TCS 9.1.10.D.7.b. Phoenix Performance brake duct kit #IPBK01 allowed. Nukabe non-adjustable sway bars (F) 667311a22 and (R) 666311bj22 allowed. Koyo Radiator #KOY-R2704, Mocal oil sandwich plate #OTSP1M18X, and Earl's oil cooler #22510ERL allowed. AMS front and rear springs #AMS-SCCA01 allowed. 38mm Turbo Inlet Restrictor is required. Racecomp Brake duct kit part #RCE-CFKBK is allowed.
Volkswagen GTI*, Jetta GLI* (06-*10*)	82.5 x 92.8 1984	2578	17 x 8 (F&R)	225/45 (F&R)	DSG: 3.46, 2.15, 1.46, 1.08, 1.10, 0.92 STD: 3.36, 2.09, 1.47, 1.10, 1.11, 0.93	DSG: 4.10 / 3.14 STD: 4.00, 3.09	(F) 312 Vented Disc (R) 286 Solid Disc	DSG @ *3130* STD @ 3100	35mm Turbo Inlet Restrictor required. Spring kit #1K0 0 71 678 is permitted. VW Spring kit #1K0 071 678A allowed.
Volkswagen Jetta TDI (2009-)	*81.0 x 95.0 1968*	*2578.1*	*16 x6.5 17 x 7*	*205/55 or 225/45*	*3.78, 2.12, 1.36, .96, .77, .76 Or 4.04, 2.37, 1.56, 1.16, .85*		*(F) 288 x 25 Vented Disc (R) 260 x 12 solid disc*	*3100*	

Notes:

9.1.11. SPEC MX-5 CLASS (REGIONAL ONLY)

These specifications are part of the SCCA GCR and all automobiles shall conform to GCR Section 9.

A. Purpose and Intent
The purpose of Spec MX-5 is to provide an opportunity to compete in similarly prepared low cost cars with limited modifications. The cars are a Club Racing version of SCCA Pro MX-5 Cup Car.

Only the US version of the 2006-2011 Mazda MX-5 is eligible to compete in Spec MX-5. Unless a particular modification or part is approved in these specifications, the vehicle and all of its parts and assemblies shall be stock including the sport package and suspension kit.

It is intended that the cars competing in Spec MX-5 be very similar in appearance and performance. Therefore, if an alternate part or modification is specified, it shall be used by all cars unless the OEM part is specifically allowed.

No modifications or alterations from the original "as delivered" vehicle configuration are permitted except those required in these specifications and in section 9.

No permitted component or modification shall additionally perform a non-permitted function. Replacement parts required to meet stock OEM specifications may be purchased from alternate standard outlets such as parts stores provided they are the exact equivalent of the stock OEM part.

B. Authorized Modifications
1. Chassis

a. The outer edges of the dashboard, outside of the dash vents, may be trimmed the minimum amount required to install the roll cage A-pillar down tubes.

b. The only allowable tow device for the front and rear of the car is a flexible tow strap. The preferred method of attaching each strap is looping it through the tow eye hole and the bumper brace in a choker hitch.

c. There shall be an arrow that contrasts strongly with the vehicle paint scheme pointing to each tow eye/strap.

d. The 3-piece front strut tower brace (p/ns: NE57-56-48X, NE57-56-48ZA, and NE57-56-49X) that comes with the sport package shall be used. The strut brace mounts may have a hole drilled in them to allow easier access to adjusters for the front shocks.

e. The driver's side inner door structural panel may be removed to fit the cage, but the stock side impact beam and the outside door latch/lock operating mechanism shall not be removed or modified.

f. Any steering wheel except wood rimmed types may be used. Any shift knob may be used.

g. A dead pedal/foot rest and heel stop may be added. Foot pedals may be modified to improve driver comfort.

h. The heater system and air conditioning equipment located in

the engine compartment may be removed, but the equipment located in the cockpit shall remain intact.

2. *Cockpit*
   a. *A bulkhead panel shall be installed in the trunk to cover the flexible portions of the fuel lines, particularly at the point where they may be rubbed by the cockpit/trunk close-out panel. The material may be metal or composite, but must be rigid.*
   b. *All interior trim components shall be removed, including the front passenger seat, carpet, sun visors, seat belts, etc., but not the dashboard and its attaching hardware and brackets. The lower portion of the door panels shall be removed. The top portion of the door panels containing the door latch release handle shall remain intact. The door window glass and window operating mechanisms shall be removed.*
   c. *Electronic items, such as the radio equipment and air bags, shall be removed. The radio face may be left in place or a replacement trim piece may be used if the radio face is removed. If the radio face plate is left installed, it must be unplugged from the vehicle wiring harness.*
   d. *Any removable equipment, such as spare tires, tools and bins, shall be removed along with any attaching hardware, brackets and covers.*
   e. *MAZDASPEED interior trim kit (p/n: 0000-07-5500-KT) shall be used in its entirety. The trunk close-out panel must be mounted up under the edge of the body to avoid having the trunk close-out panel rub on fuel hoses in the trunk.*
3. *Body*
   a. *Interior and exterior door handles are required to remain operable.*
   b. *Door locks must be disabled.*
   c. *All three of the brake lights shall be in working order.*
   d. *The headlights and tail lights shall remain in working order.*
   e. *The 2 OE external mirrors for the correct vehicle make and model (left and right) are required. They must be mounted in stock location and must be positioned so that the driver can see objects along both sides of the vehicle. The OE interior rearview mirror or an aftermarket rearview mirror shall be used.*
   f. *2006-2008 SPEC MX-5 cars may be fitted with 2009-2010 bodywork.*
   g. *MAZDASPEED trunk lip spoiler (p/n: NF51-V4-920G-xx) shall be used.*
   h. *Windshield clips are permitted and recommended. The MAZDASPEED Lexan windshield (P/N 0000-07-5101-LX) may be used in place of the stock windshield. The front quarter-windows on the doors may be removed.*
   i. *The inner hood insulation liner may be removed.*
   j. *Hood pins are permitted. If hood pins are fitted, the OE latch may be removed.*
   k. *Auxiliary screen material may be used behind the OE grille piece.*

l. *Left and right inner fender liners must remain intact. Inner fender liners may be riveted in place and a small portion of the liners may be trimmed away where the tire makes contact with the inner fender liners. Left and right front fender liners may be removed only if the large excess holes are closed off using .040" - .060" aluminum and securely fastened into place using rivets.*

m. *Front and rear fender lips may be rolled to prevent tire damage.*

n. *The OE driving lights may be removed. The resultant openings may be used to direct air to the front brakes.*

o. *Side marker lenses may be substituted with a more durable material as long as they retain their original shape and color.*

p. *SPEC MX-5 cars may run the factory optional removable hardtop. The factory latches must be removed and replaced with positive fasteners.*

4. *Tires*

a. *Dry tires must be any DOT P225/45ZR17.*

b. *Wet tires must be any DOT 225/45ZR17.*

5. *Weight*

a. *Minimum weight is 2600 lbs.*

b. *Ballast is permitted to be used to achieve the minimum weight for a vehicle. Ballast may be mounted anywhere in/on the car provided that it does not perform a non-approved function. All ballast shall be mounted in such a way that tools are required to remove it. Holes may be drilled in the chassis and the chassis may be reinforced in order to safely secure ballast provided that the reinforcement does not perform a non-approved function. Grade 5 bolts, or better, and load-spreading washers shall be used to mount ballast when necessary.*

6. *Engine*

a. *Engines must be ordered through MAZDASPEED. Competitor rebuilt engines are prohibited. Sealed engines may be returned to Comptech for service and resealing. Engines returned to Comptech unsealed will be refused.*

b. *The crankshaft position sensor and crankshaft pulley relationship must be as specified in the 2006-2011 MX-5 Factory service manual, CRANKSHAFT POSITION (CKP) SENSOR INSPECTION [LF] Pg. 01-40-34.*

c. *MAZDASPEED cold air intake system (p/n: 0000-06-5203-KT) is required.*

d. *MAZDASPEED exhaust system (p/n: 0000-06-5450-KT) is required.*

e. *A fuel test port must be installed between the rigid fuel supply line and the fuel rail per 9.3.*

f. *A turn at the end of the exhaust pipe may be used to help disperse/direct noise in order to meet specified decibel limit in all condtions.*

g. *OEM exhaust system heat shields may be removed. Exhaust headers and exhaust systems may be wrapped, coated or both.*

h. *The oxygen sensor may be reinstalled in the competition exhaust system. The sensor shall be placed in the exhaust system within reach of the OE electrical connection for the oxygen sensor.*

i. *An engine to fender brace may be used if mounted in such a way that it does not foul brake lines, fuel lines, or other systems that would interfere with the safe operation of the vehicle under race con¬ditions.*

j. *Spark plugs are unrestricted.*

7. *Engine Control Unit (ECU)*

a. *The stock/unmodified ECU shall be used. [Note: possibility of a sealed unit from SCCA Pro.]*

b. *Instrument clusters shall be unmodified OE parts.*

8. *Drivetrain*

a. *The stock 2006-2011 6-speed gearbox, internal parts and ratios shall be used by all cars. MAZDASPEED 3-4 shift fork (P/N 0000-02-5701) is permitted.*

Gear Ratios: 1st - 3.82; 2nd - 2.26; 3rd - 1.64; 4th - 1.18; 5th - 1.00; 6th - 0.83

b. *The OE open differential or OE limited slip differential may be used. Final Drive Ratio: 4.10:1*

c. *No treating, polishing or coating of transmission, differential or axle components is permitted.*

d. *The clutch disc and pressure plate must be bolted directly to an unmodified stock flywheel. Permitted clutch components are as follows:*

Part	Applicable Part Numbers
Clutch Disc	Mazda LF04-16-460B MAZDASPEED 0000-02-5415-AC MAZDASPEED 0000-02-5416-AC
Pressure Plate	Mazda LF04-16-410A MAZDASPEED 0000-02-5405-AC

Part	Diameter (in.)	Minimum Weight (lbs.)
Clutch disc	8.5	1.7
Pressure Plate	9.875	9.4
Flywheel	11.0 9.375 (machined surface)	16.0

9. *Suspension and Steering*

a. *Steering lock mechanisms shall be removed.*

b. *All cars must use the MAZDASPEED SPEC MX-5 coil over kit. Kits must be used in their entirety with no parts substituted or*

omitted. The following is a breakdown of components supplied in the kit:

SPEC MX-5 Kit			
Part	Location	Part Number	Notes
Shocks	Front	F4-BE5-D175-HO	Bilstein Sealed Shock
	Rear	F4-BE5-D174-HO	Bilstein Sealed Shock
Springs	Front	Eibach #TBD	400 lb/in
	Rear	Eibach #TBD	350 lb/in
Anti-Roll Bars	Front/Rear	KIT 5536.320	Rear bar is adjustable. F: 25mm R: 16mm
Helper Spring and Adapter Spring Perch	Front/Rear	0000-04-HLPR-EB	

c. *Bump stops may not be modified as supplied in the kit*

d. *The anti-roll bar end links shall be used as provided. However, the anti-roll bar end links may be connected or disconnected as the driver sees fit.*

e. *Suspension alignments (camber, caster, toe) are unrestricted within the limits of the unmodified factory adjustments.*

f. *There is no minimum ride height.*

g. *The rear shock towers supplied with the MAZDASPEED suspension kit may be reinforced through the addition of material to it, and welding of, the shock towers. Any reinforcement shall not connect the shock tower to more area of the chassis than the unreinforced shock tower contacts.*

h. *Hardware items (e.g. nuts, bolts) may be replaced by similar items performing the same fastening function(s).*

i. *RX8 front hubs may be substituted in place of the O.E. hubs. To complete the conversion, the following parts may be purchased from MAZDASPEED: Front Hub #F151-33-04X or #F189-33-04X, ABS Adaptor #0000-03-5901, special installation tool# 0000-03-5902. An "L" shaped retainer is allowed for the ABS adaptor housing provided it serves no other purpose.*

10. *Brakes*

a. *Stock Brake Rotor Specification*

Location	Diameter	Thickness	Notes
Front	290mm (11.4 in.)	23mm (0.9 in.)	Vented
Rear	280mm (11.0 in.)	11mm (0.4 in.)	Solid

b. *Backing plates and dirt shields may be ventilated or removed.*

c. *Brake lines may be replaced with steel lines or Teflon lined metal braided hose.*

d. *Any brake pad that fits the stock, unmodified caliper may be used. Brake pad friction material is free but must retain stock size and shape.*

e. *MAZDASPEED brake duct kit (p/n: 0000-03-5301) is permitted. The inner fender panels may be modified to fit the brake kit to the driving light openings.*

11. *Wheels*

a. *All wheels shall be one of the three OE Mazda MX-5 17"x7" wheels.*

Style 1: (p/n: 9965-38-7070)
Style 2: (p/n: 9965-36-7070)
Style 3: (p/n: 9965-45-7070)

b. *Aftermarket wheel studs and lug nuts are permitted. Wheel spacers are not permitted.*

12. *Cooling System*

a. *The alternate radiator (p/n: 0000-01-5550) from MAZDASPEED is permitted.*

b. *Thermostats may be modified, removed or replaced.*

c. *A bleeder screw may be added to heater hose tube.*

d. *MAZDASPEED oil cooler (p/n: 0000-01-5100-KT) may be installed.*

e. *The gap between the top and sides of the radiator and the core support may be sealed with tape, silicon, foam, etc.*

13. *Data Acquisition*

a. *Vehicles may be equipped with additional data acquisition systems consisting of a data logger, sensors and required wiring. The data acquisition system may perform no other function.*

14. *Electrical*

a. *Batteries may be replaced with those of an alternate manufacturer provided they are of similar amp-hour capacity, size and weight and are fitted in the standard location. Additional battery hold-down devices may be used and are recommended. The positive battery terminal shall be insulated to prevent sparking.*

b. *With the exception of the wiring needed to install the safety equipment, to operate any data system, to preserve power to the PCM or to repair accident damage, there shall be no additional non-OE wiring, connections, etc. to any wiring harness or component of the car.*

15. *Fuel Tank*

a. *The unleaded fuel filler trap door and restrictor plate in the filler neck may be removed.*

NOTES:

SCCA
CLUB RACING

An electronic copy of the 2011 General Competition Rules is available on the SCCA website: www.scca.com

Sports Car Club of America, Inc.
Club Racing Department
6700 SW Topeka Blvd.
Building 300
Topeka, Kansas 66619
(800) 770-2055
www.scca.com